# Standard cylinders DNG/DNGL/DNGZK/DNGZS, ISO 15552

FESTO

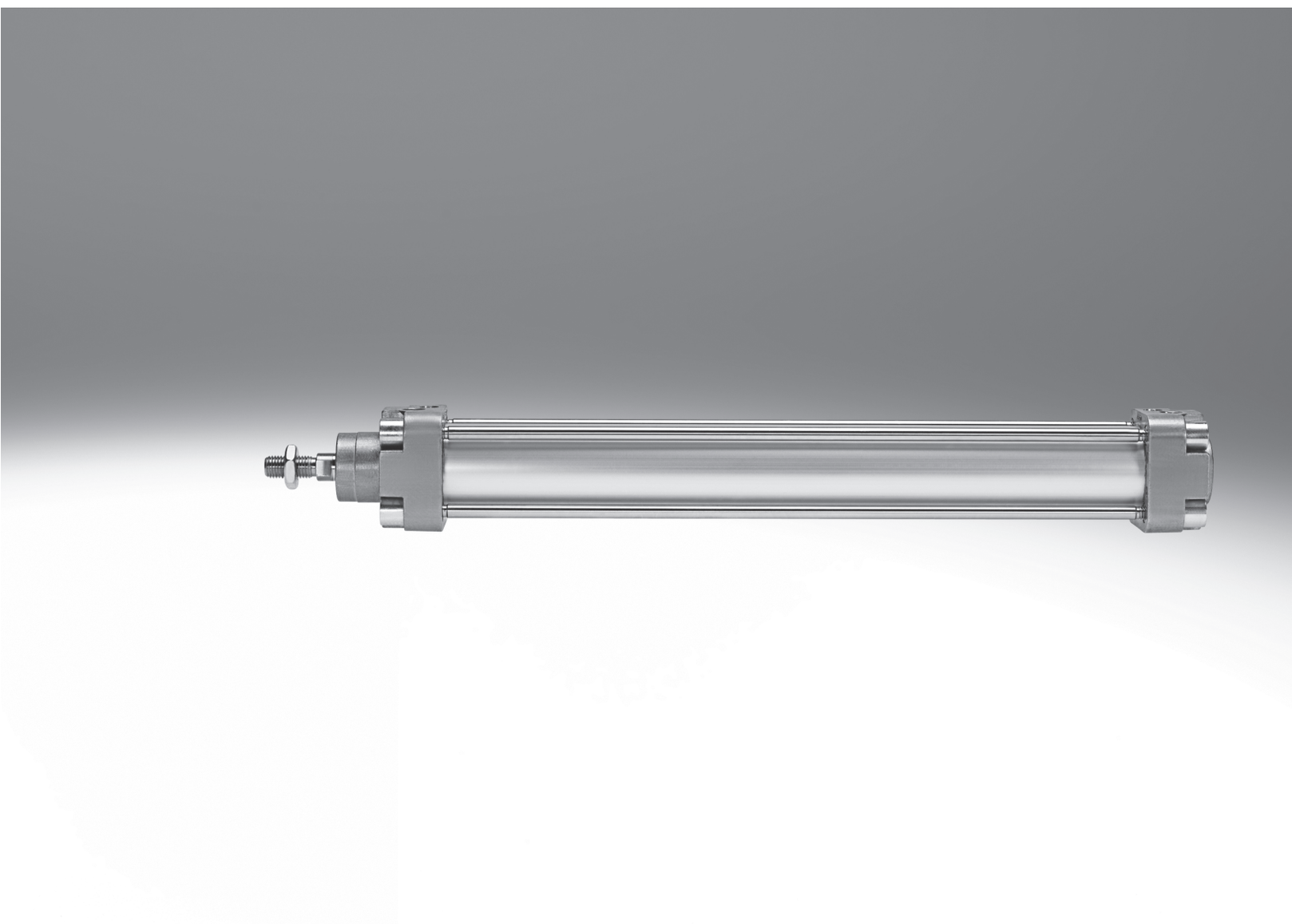

# Standard cylinders DNG/DNGL/DNGZK/DNGZS, ISO 15552

Features

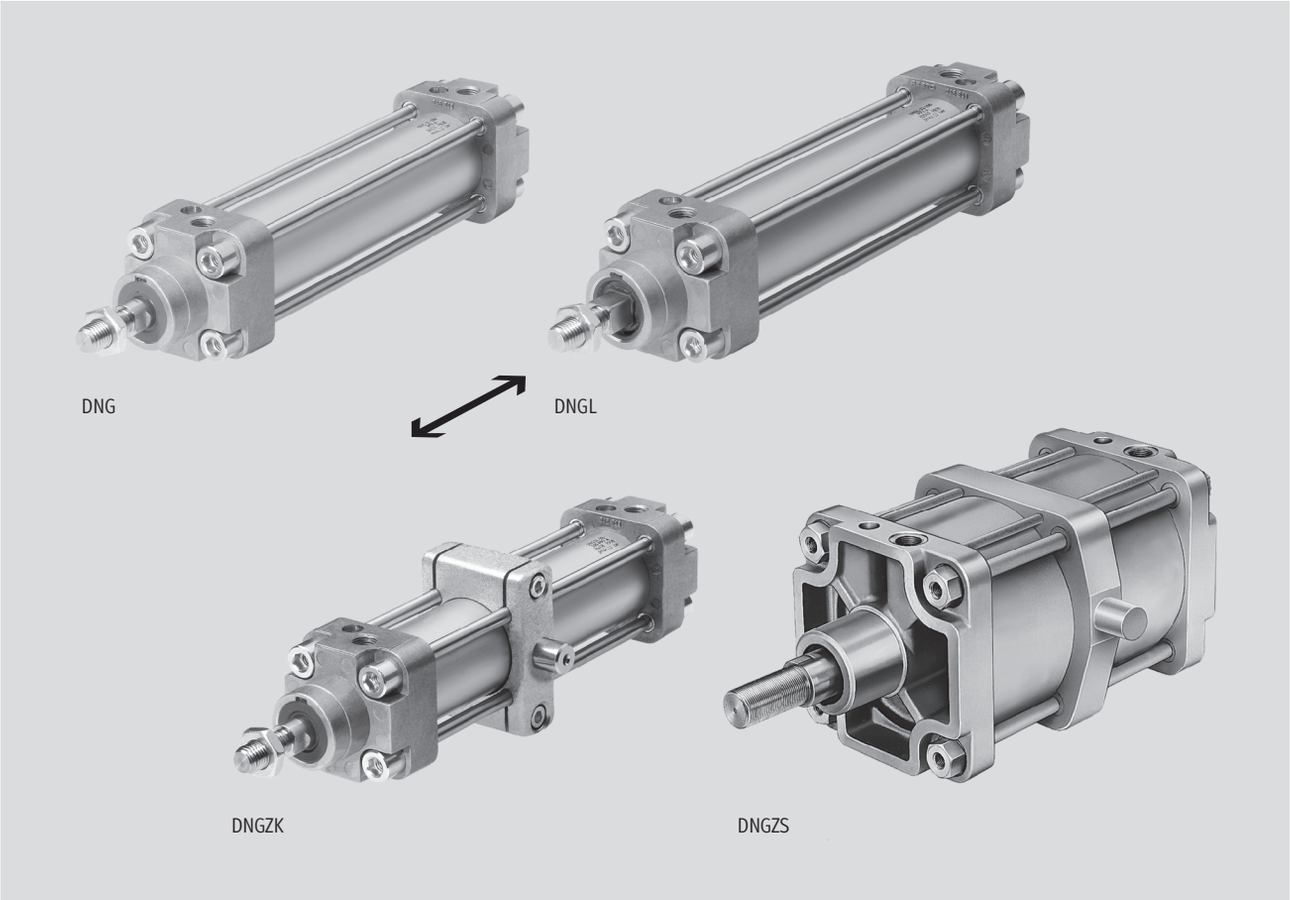


## Brief description

- Double-acting
- For contactless position sensing
- With adjustable end-position cushioning at both ends
- Robust tie rod design
- DNGL/DNGLZ: secured against rotation by means of square piston rod
- Standards-based cylinders to ISO 15552 (corresponds to the withdrawn standards ISO 6431, DIN ISO 6431, VDMA 24 562, NF E 49 003.1 and UNI 10290)

# Standard cylinders DNG/DNGL/DNGZK/DNGZS, ISO 15552

Features

## Variants

DNG/DNGZK/DNGZS

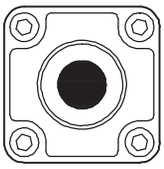

DNGL/DNGLZ with square piston rod (non-rotating)

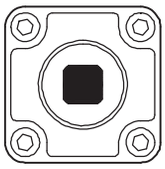

### Contactless sensing with proximity sensors SMEO-1/SMTO-1/SMPO-1

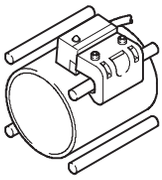

Depending on the stroke, each cylinder can have one or more proximity sensors attached to the tie rods (piston ∅ 32 … 100 mm). With piston ∅ 125 … 320 mm, they are fixed to additional mounting rods that are included in the scope of delivery. The sensors are used for contactless sensing of end or intermediate positions of the cylinder.

## Mounting options

### Installation of basic version

Mounting at front

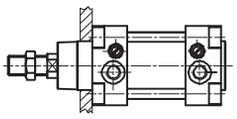

Mounting at rear

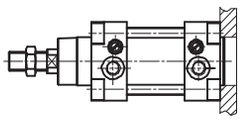

### Installation options using mounting attachments

Foot mounting MS1[1)]
HNG

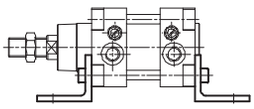

Flange mounting MF1/MF2[1)]
FNG

at front at rear

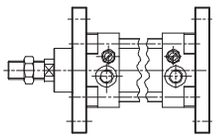

Trunnion flange
ZNG

at front at rear

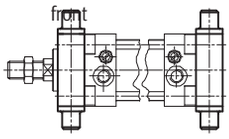

Swivel flange MP2[1)]
SNG/SNGB/SNGL

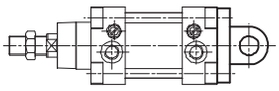

Swivel flange with spherical bearing
SSNG

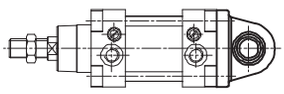

Trunnion mounting kit MT4[1)]
LNZG

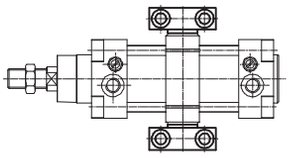

1) Standard designation to ISO 15552 (ISO 6431)

# Standard cylinders DNG/DNGL/DNGZK/DNGZS, ISO 15552

Product range overview

| Function | Design | Type | Piston ∅ [mm] | Stroke [mm] | | Position sensing A | Cushioning Adjustable PPV |
|---|---|---|---|---|---|---|---|
| Double-acting | **Basic version** | | | | | | |
| | 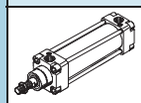 | **DNG** Single-ended piston rod | 32, 40, 50, 63, 80, 100, 125 | 25, 40, 50, 100, 125, 160, 200, 250, 320, 400, 500 | 10 … 2000 | ■ | ■ |
| | | | 160, 200 | – | 10 … 2000 | | |
| | | | 250, 320 | – | 10 … 1100 | | |
| | 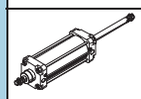 | **DNG-…-S2** Through piston rod | 32, 40, 50, 63, 80, 100, 125, 160, 200 | | 10 … 2000 | ■ | ■ |
| | | | 250, 320 | | 10 … 1100 | | |
| | **Non-rotating piston rod** | | | | | | |
| | 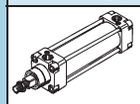 | **DNGL** Single-ended piston rod | 32 | – | 10 … 300 | ■ | ■ |
| | | | 40 | – | 10 … 400 | | |
| | | | 50, 63 | – | 10 … 500 | | |
| | | | 80, 100 | – | 10 … 600 | | |
| | 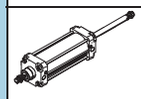 | **DNGL-…-S2** Through piston rod | 32 | – | 10 … 300 | ■ | ■ |
| | | | 40 | – | 10 … 400 | | |
| | | | 50, 63 | – | 10 … 500 | | |
| | | | 80, 100 | – | 10 … 600 | | |
| | 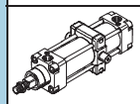 | **DNGLZ** with central trunnion mounting | 32 | – | 10 … 300 | ■ | ■ |
| | | | 40 | – | 10 … 400 | | |
| | | | 50, 63 | – | 10 … 500 | | |
| | | | 80, 100 | – | 10 … 600 | | |
| | **With central trunnion mounting** | | | | | | |
| | 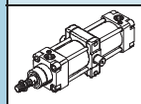 | **DNGZK** adjustable | 32, 40, 50, 63 | 40, 50, 100, 125, 160, 200, 250, 320, 400, 500 | 10 … 2000 | ■ | ■ |
| | | | 80, 100 | 50, 100, 125, 160, 200, 250, 320, 400, 500 | 10 … 2000 | | |
| | | | 125, 160, 200 | – | 10 … 2000 | | |
| | 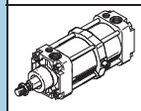 | **DNGZS** fixed | 250, 320 | – | 10 … 1100 | ■ | ■ |

# Standard cylinders DNG/DNGL/DNGZK/DNGZS, ISO 15552

Product range overview

| Type | Piston rod | | Heat-resistant seal | High corrosion protection | ➔ Page/Internet |
|---|---|---|---|---|---|
| | Male thread | Stainless steel<br>S3 | S6 | S8 | |
| **Basic version** | | | | | |
| **DNG**<br>Single-ended piston rod | ■ | ■ | ■ | ■ | 9 |
| **DNG-...-S2**<br>Through piston rod | ■ | – | – | – | 9 |
| | | | | | |
| **Non-rotating piston rod** | | | | | |
| **DNGL**<br>Single-ended piston rod | ■ | – | ■ | – | 9 |
| **DNGL-...-S2**<br>Through piston rod | ■ | – | – | – | 9 |
| **DNGLZ**<br>with central trunnion mounting | ■ | – | ■ | – | 9 |
| | | | | | |
| **With central trunnion mounting** | | | | | |
| **DNGZK**<br>adjustable | ■ | ■ | ■ | ■ | 9 |
| **DNGZS**<br>fixed | ■ | ■ | ■ | ■ | 9 |

# Standard cylinders DNG/DNGL/DNGZK/DNGZS, ISO 15552

Peripherals overview

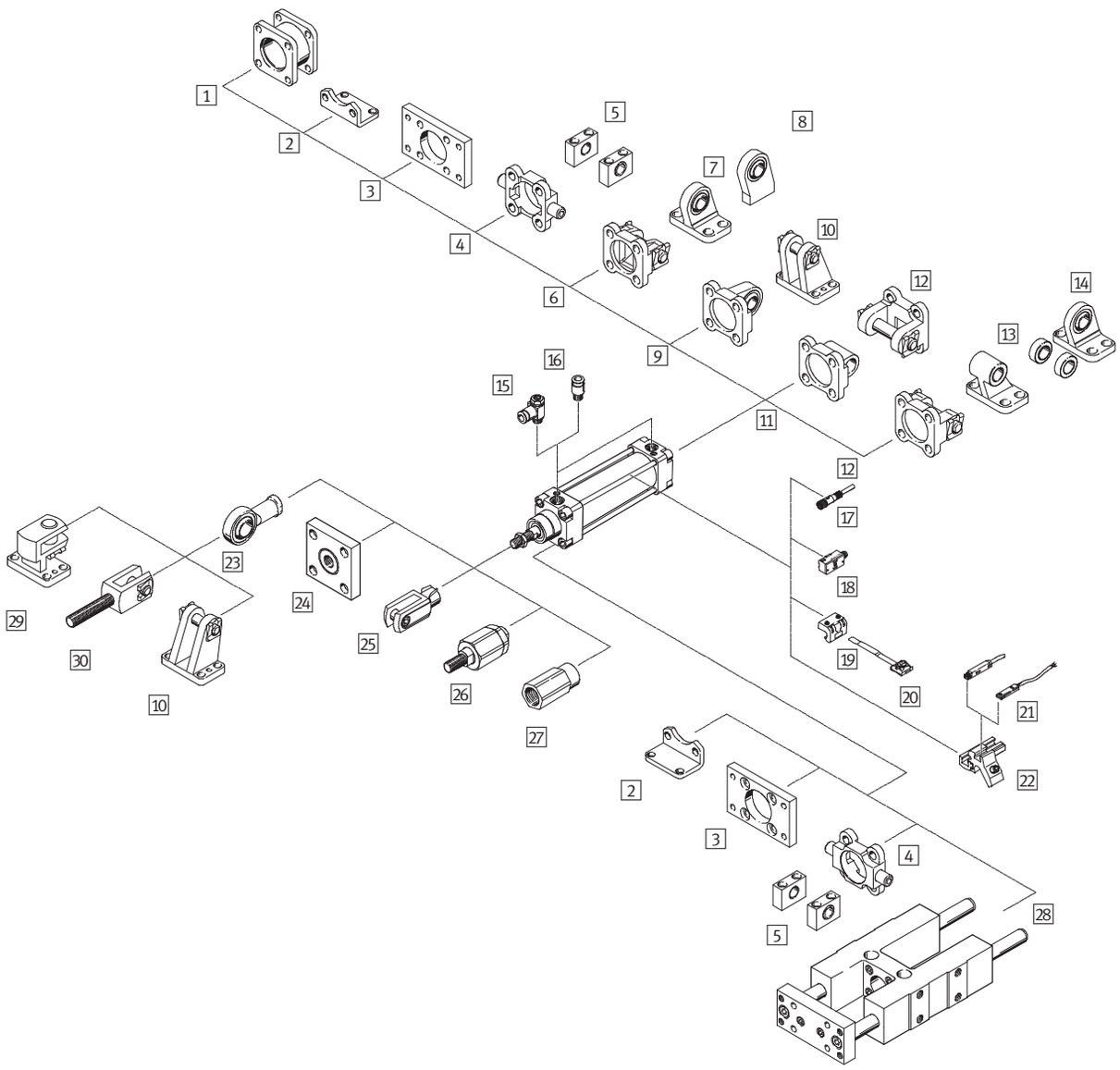


| Mounting attachments and accessories | | |
|---|---|---|
| | **Brief description** | **➔ Page/Internet** |
| 1 Adapter kit<br>DPNG | For connecting two DNG cylinders with identical piston ∅ to form a multi-position cylinder | 19 |
| 2 Foot mounting<br>HNG | For bearing and end caps<br>corresponds to MS1 to ISO 15552 | 20 |
| 3 Flange mounting<br>FNG | For bearing or end caps<br>corresponds to MF1/MF2 to ISO 15552 | 21 |
| 4 Trunnion flange<br>ZNG | For bearing or end caps | 21 |
| 5 Trunnion support<br>LNZG | Corresponds to MT4 to ISO 15552 | 22 |
| 6 Swivel flange<br>SNG | For end caps | 22 |

# Standard cylinders DNG/DNGL/DNGZK/DNGZS, ISO 15552

Peripherals overview

| Mounting attachments and accessories | | | |
|---|---|---|---|
| | | Brief description | ➔ Page/Internet |
| 7 | Clevis foot mounting<br>LSNG | With spherical bearing | 25 |
| 8 | Clevis foot mounting<br>LSNSG | Weld-on<br>with spherical bearing | 25 |
| 9 | Swivel flange<br>SSNG | With spherical bearing for clevis foot mounting LBG | 23 |
| 10 | Clevis foot mounting<br>LBG | With non-rotating pivot pin | 25 |
| 11 | Swivel flange<br>SNGL | For end caps<br>corresponds to MP2 to ISO 15552 | 24 |
| 12 | Swivel flange<br>SNGB | For end caps<br>corresponds to MP2 to ISO 15552 | 23 |
| 13 | Clevis foot mounting<br>LNG | For swivel flange SNGB | 25 |
| 14 | Clevis foot mounting<br>LSN | With spherical bearing | 25 |
| 15 | One-way flow control valve<br>GRLA | For speed regulation | 25 |
| 16 | Push-in fitting<br>QS | For connecting compressed air tubing with standard O.D. | quick star |
| 17 | Connecting cable, straight<br>NEBU | – | 28 |
| | Connecting cable, angled<br>NEBU | – | 28 |
| 18 | Proximity sensors<br>SMEO-1/SMTO-1/SMPO-1-H-B | – | 29 |
| 19 | Sensor mounting kit<br>SMB | For proximity sensor SMEO-1/SMTO-1 | 29 |
| 20 | Sensor mounting kit<br>SMBS | For proximity sensor SMPO-1-H-B | 29 |
| | Sensor mounting kit<br>SMBR-8-8/100-S6 | Corrosion resistant, for proximity sensor SME/SMT-8 | 29 |
| 21 | Proximity sensors<br>SME/SMT-8 | – | 28 |
| 22 | Sensor mounting kit<br>SMBZ-8- ... | For proximity sensor SME/SMT-8 | 28 |
| 23 | Rod eye<br>SGS | With spherical bearing | 26 |
| 24 | Coupling piece<br>KSG/KSZ | For compensating radial deviations | 26 |
| 25 | Rod clevis<br>SG | Permits a swivelling movement of the cylinder in one plane | 26 |
| 26 | Self-aligning rod coupler<br>FK | For compensating radial and angular deviations | 26 |
| 27 | Adapter<br>AD | – | 26 |
| 28 | Guided unit<br>FENG | To protect against torsion at high torque loads | 27 |
| 29 | Right-angle clevis foot<br>LQG | With non-rotating pivot pin | 25 |
| 30 | Rod clevis<br>SGA | Suitable for spherical mounting of cylinders in conjunction with rod eye SGS | 26 |

# Standard cylinders DNG/DNGL/DNGZK/DNGZS, ISO 15552

Type codes

| DNG | – | 50 | – | 80 | – | PPV | – | A | – | | – | |
|---|---|---|---|---|---|---|---|---|---|---|---|---|

| Type | |
|---|---|
| Double-acting | |
| DNG | Standard cylinder |
| DNGL | Standard cylinder, non-rotating |
| DNGLZ | Standard cylinder, non-rotating with central trunnion mounting |
| DNGZK | Standard cylinder with central trunnion mounting (adjustable) |
| DNGZS | Standard cylinder with central trunnion mounting (fixed) |

| Piston ∅ [mm] |
|---|

| Stroke [mm] |
|---|

| Cushioning | |
|---|---|
| PPV | Adjustable at both ends |

| Position sensing | |
|---|---|
| A | For proximity sensing |

| Trunnion flange axis distance | |
|---|---|
| XV | Trunnion flange position |

| Variants | |
|---|---|
| S2 | Through piston rod |
| S3 | Stainless steel piston rod |
| S6 | Heat resistant seal for temperatures up to 120 °C |
| S8 | High corrosion protection |

# Standard cylinders DNG/DNGL/DNGZK/DNGZS, ISO 15552

Technical data

Function

Diameter
32 … 320 mm

Stroke length
10 … 2000 mm

www.festo.com

Variants

S2

S3

S6

S8

- Standards-based cylinders to ISO 15552 (corresponds to the withdrawn standards ISO 6431, DIN ISO 6431, VDMA 24 562, NF E 49 003.1 and UNI 10290)

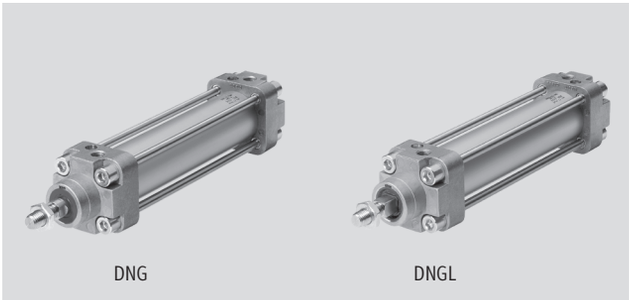

DNG DNGL

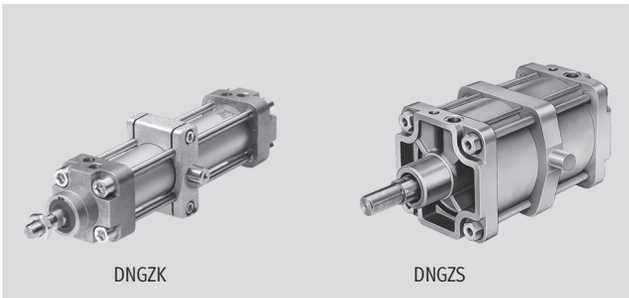

DNGZK DNGZS

| General technical data | | | | | | | | | | | | |
|---|---|---|---|---|---|---|---|---|---|---|---|---|
| Piston ∅ | | 32 | 40 | 50 | 63 | 80 | 100 | 125 | 160 | 200 | 250 | 320 |
| Pneumatic connection | | G⅛ | G¼ | G¼ | G⅜ | G⅜ | G½ | G½ | G¾ | G¾ | G1 | G1 |
| Piston rod thread | | M10x1.25 | M12x1.25 | M16x1.5 | M16x1.5 | M20x1.5 | M20x1.5 | M27x2 | M36x2 | M36x2 | M42x2 | M48x2 |
| Operating medium | | Filtered compressed air, lubricated or unlubricated | | | | | | | | | | |
| Design | | Piston | | | | | | | | | | |
| | | Piston rod | | | | | | | | | | |
| | | Profile barrel | | | | | | | | | | |
| Cushioning | | Adjustable at both ends | | | | | | | | | | |
| Cushioning length | [mm] | 19 | 21 | 23 | 23 | 30 | 30 | 40 | 40 | 50 | 60 | 66 |
| Position sensing | | For proximity sensing | | | | | | | | | | |
| Type of mounting | | Via accessories | | | | | | | | | | |
| Mounting position | | Any | | | | | | | | | | |

| Operating and environmental conditions | | | | | | | | | | | | |
|---|---|---|---|---|---|---|---|---|---|---|---|---|
| Piston ∅ | | 32 | 40 | 50 | 63 | 80 | 100 | 125 | 160 | 200 | 250 | 320 |
| Operating pressure | [bar] | 0.6 … 10 | | | | | | | | | | |
| Ambient temperature[1)] | [°C] | –20 … +80 | | | | | | | | | | |
| ATEX | | Specified types ➔ www.festo.com | | | | | | | | | | |

1) Note operating range of proximity sensors

| Forces [N] | | | | | | | | | | | |
|---|---|---|---|---|---|---|---|---|---|---|---|
| Piston ∅ | 32 | 40 | 50 | 63 | 80 | 100 | 125 | 160 | 200 | 250 | 320 |
| Theoretical force at 6 bar, advancing | 482 | 753 | 1,178 | 1,870 | 3,015 | 4,712 | 7,360 | 12,064 | 18,850 | 29,450 | 48,250 |
| Theoretical force at 6 bar, retracting | 415 | 633 | 990 | 1,682 | 2,720 | 4,418 | 6,880 | 11,310 | 18,096 | 28,270 | 46,380 |

## Lateral force $F_Q$ as a function of the stroke length l

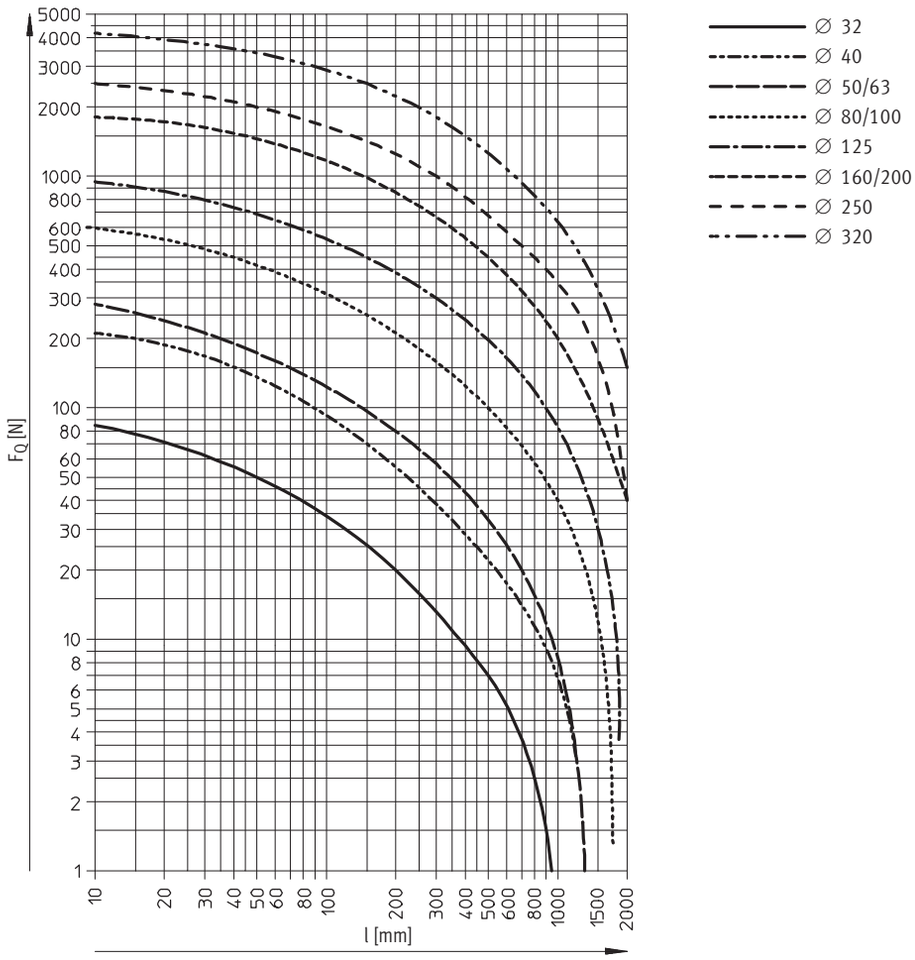


| Weights [g] | | | | | | | | | | | |
|---|---|---|---|---|---|---|---|---|---|---|---|
| Piston ∅ | 32 | 40 | 50 | 63 | 80 | 100 | 125 | 160 | 200 | 250 | 320 |
| **DNG/DNGL** | | | | | | | | | | | |
| Product weight at 0 mm stroke | 565 | 790 | 1,400 | 1,725 | 2,875 | 4,100 | 7,305 | 17,265 | 20,115 | 30,800 | 53,200 |
| Additional weight per 10 mm stroke | 30 | 40 | 50 | 60 | 80 | 100 | 140 | 190 | 250 | 360 | 570 |
| | | | | | | | | | | | |
| **DNGZK/DNGLZ/DNGZS** | | | | | | | | | | | |
| Product weight at 0 mm stroke | 820 | 1,275 | 1,945 | 2,765 | 3,960 | 6,210 | 10,215 | 19,510 | | | |
| Additional weight per 10 mm stroke | 30 | 40 | 50 | 60 | 80 | 100 | 140 | 190 | | | |

## Materials

Sectional view DNG/DNGL

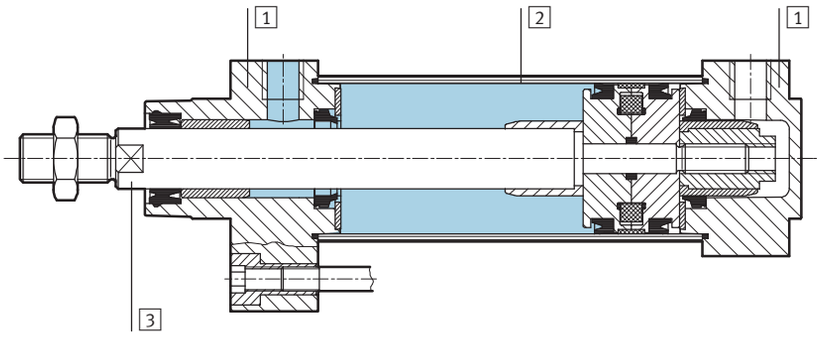


Sectional view DNGZK/DNGLZ

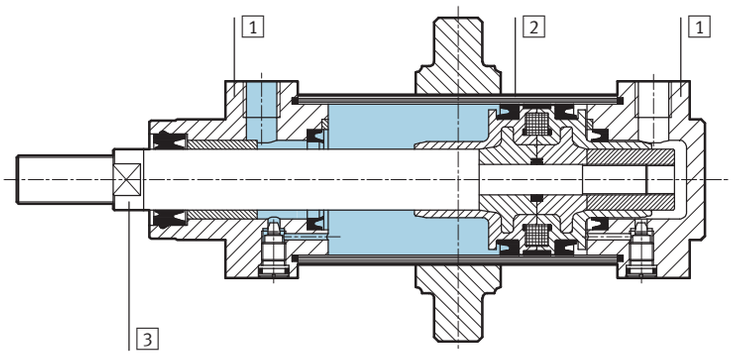


| Standard cylinder | DNG/DNGL | DNGZK/DNGLZ |
|---|---|---|
| 1 Bearing and end caps | Aluminium | Die-cast aluminium (∅ 160/200: die-cast aluminium) |
| 2 Cylinder barrel | Aluminium | Aluminium (∅ 160/200: brass) |
| 3 Piston rod, tie rod | High-alloy steel | |
| – Seals | Polyurethane, nitrile rubber | |

**Dimensions** Download CAD data ➔ **www.festo.com**

DNG/DNGL

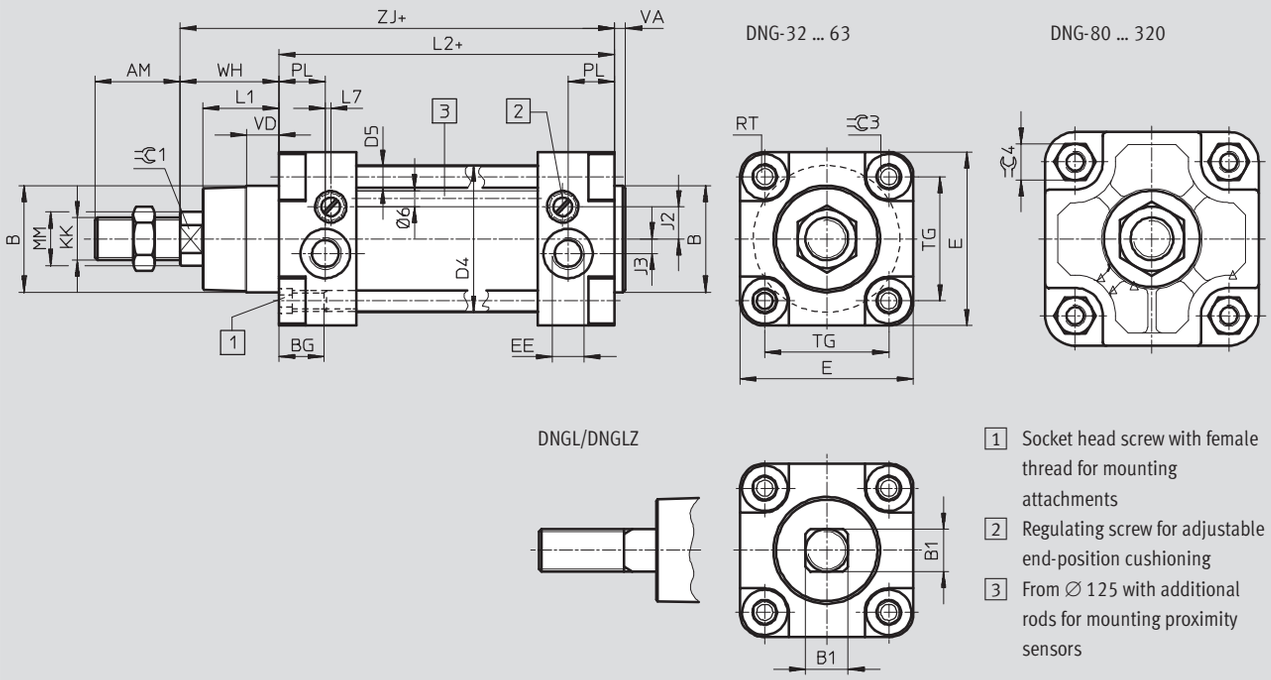


1 Socket head screw with female thread for mounting attachments

2 Regulating screw for adjustable end-position cushioning

3 From ∅ 125 with additional rods for mounting proximity sensors

\+ = plus stroke length

Variant S2 – Through piston rod

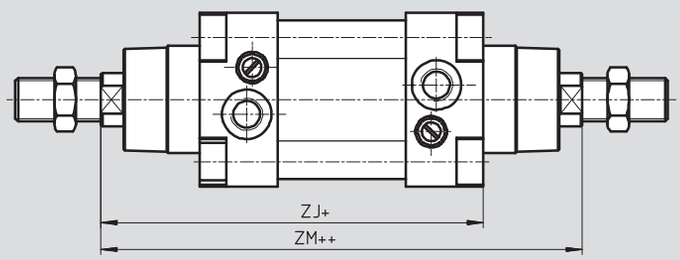


\+ = plus stroke length

++ = plus 2x stroke length

DNGZK/DNGLZ/DNGZS – with central trunnion mounting adjustable, fixed

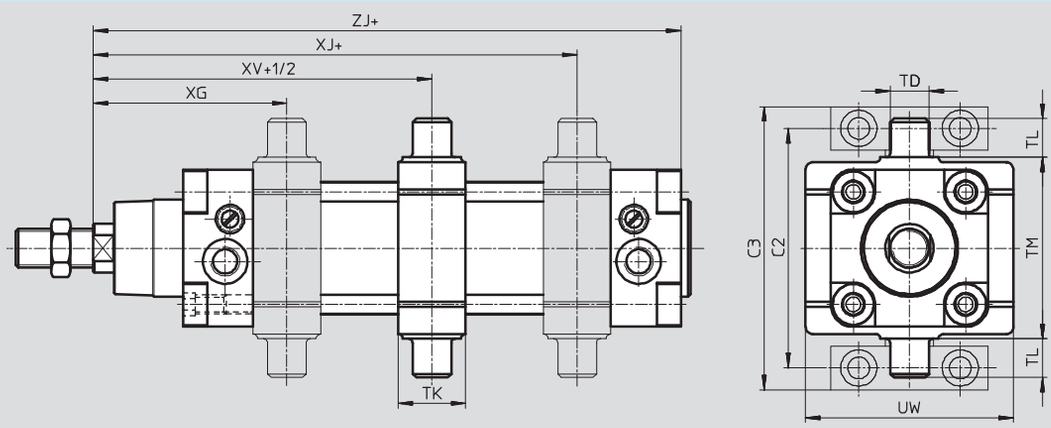


\+ = plus stroke length

+½ = plus half stroke length

# Standard cylinders DNG/DNGL/DNGZK/DNGZS, ISO 15552

Technical data

| ∅ [mm] | AM | B ∅ d11 | B1 f9 | BG | C2 | C3 | D4 ∅ | D5 ∅ | E | EE | J2 | J3 |
|---|---|---|---|---|---|---|---|---|---|---|---|---|
| 32 | 22 | 30 | 10 | 17 | 71 | 86 | 37 | 6 | 50 | G⅛ | 7 | – |
| 40 | 24 | 35 | 12 | 16.5 | 87 | 105 | 45 | 6 | 55 | G¼ | 9.5 | 2.5 |
| 50 | 32 | 40 | 16 | 17 | 99 | 117 | 55 | 8 | 65 | G¼ | 12 | 5.5 |
| 63 | 32 | 45 | 16 | 19.5 | 116 | 136 | 68 | 8 | 75 | G⅜ | 14 | 6 |
| 80 | 40 | 45 | 20 | 20 | 136 | 156 | 86 | 10 | 100 | G⅜ | 15 | 7 |
| 100 | 40 | 55 | 20 | 20 | 164 | 189 | 107 | 10 | 120 | G½ | 13 | 8 |
| 125 | 54 | 60 | – | 25 | 192 | 217 | 133 | 12 | 145 | G½ | 13 | 8 |
| 160 | 72 | 65 | – | 24 | 245 | 280 | 168 | 16 | 186 | G¾ | 22 | 22 |
| 200 | 72 | 75 | – | 24 | 295 | 330 | 210 | 16 | 230 | G¾ | 22 | 22 |
| 250 | 84 | 90 | – | 25.5 | 375 | 420 | 254 | 18.3 | 270 | G1 | 25 | 25 |
| 320 | 96 | 110 | – | 28.5 | 465 | 520 | 325 | 22 | 340 | G1 | 30 | 30 |

| ∅ [mm] | KK | L1 | L2 | L7 | MM ∅ | PL | RT | TD ∅ e9 | TG | TK | TL |
|---|---|---|---|---|---|---|---|---|---|---|---|
| 32 | M10x1.25 | 19 | 94 ±0.4 | 5.8 | 12 | 8.8 | M6 | 12 | 32.5 | 20 | 12 |
| 40 | M12x1.25 | 21.5 | 105 ±0,7 | 5.3 | 16 | 11 | M6 | 16 | 38 | 25 | 16 |
| 50 | M16x1.5 | 28.5 | 106 ±0.7 | 2 | 20 | 17.5 | M8 | 16 | 46.5 | 28 | 16 |
| 63 | M16x1.5 | 28.5 | 121 ±0.8 | 5 | 20 | 18 | M8 | 20 | 56.5 | 30 | 20 |
| 80 | M20x1.5 | 34.5 | 128 ±0.8 | 8 | 25 | 17 | M10 | 20 | 72 | 32 | 20 |
| 100 | M20x1.5 | 37.5 | 138 ±0.8 | 13 | 25 | 18 | M10 | 25 | 89 | 38 | 25 |
| 125 | M27x2 | 46 | 160 ±1 | 14 | 32 | 18 | M12 | 25 | 110 | 44 | 25 |
| 160 | M36x2 | 55 | 180 ±1.1 | – | 40 | 25 | M16 | 32 | 140 | 48 | 32 |
| 200 | M36x2 | 65 | 180 ±1.6 | – | 40 | 28 | M16 | 32 | 175 | 48 | 32 |
| 250 | M42x2 | 67 | 200 ±2 | – | 50 | 31 | M20 | 40 | 220 | 60 | 40 |
| 320 | M48x2 | 82 | 220 ±2 | – | 63 | 31 | M24 | 50 | 270 | 70 | 50 |

| ∅ [mm] | TM | UW | VA | VD | WH | XG | XJ | XV | ZJ | ZM | ⌭1 | ⌭3 | ⌭4 |
|---|---|---|---|---|---|---|---|---|---|---|---|---|---|
| 32 | 50 | 68 | 4 | 10.5 | 26 | 62 ±1.8 | 84 ±1.8 | 73 ±1.8 | 120 | 146 | 10 | 6 | – |
| 40 | 63 | 72 | 4 | 10.5 | 30 | 69 ±1.8 | 96 ±1.8 | 82.5 ±1.8 | 135 | 165 | 13 | 6 | – |
| 50 | 75 | 86 | 4 | 12 | 37 | 80 ±1.8 | 100 ±1.8 | 90 ±1.8 | 143 | 180 | 17 | 8 | – |
| 63 | 90 | 98 | 4 | 12.5 | 37 | 87 ±2.2 | 108 ±2.2 | 97.5 ±2.2 | 158 | 195 | 17 | 8 | – |
| 80 | 110 | 110 | 4 | 16.5 | 46 | 101 ±2.2 | 119 ±2.2 | 110 ±2.2 | 174 | 220 | 22 | – | 17 |
| 100 | 132 | 136 | 4 | 15.5 | 51 | 112 ±2.2 | 128 ±2.2 | 120 ±2.2 | 189 | 240 | 22 | – | 17 |
| 125 | 160 | 160 | 6 | 20.5 | 65 | 136 ±2.2 | 154 ±2.2 | 145 ±2.2 | 225 | 290 | 27 | – | 19 |
| 160 | 200 | 200 | 6 | – | 80 | 155 ±2.6 | 185 ±2.6 | 170 ±2.6 | 260 | 340 | 36 | – | 32 |
| 200 | 250 | 240 | 6 | – | 95 | 165 ±2.2 | 205 ±2.2 | 185 ±2.2 | 275 | 370 | 36 | – | 32 |
| 250 | 320 | 270 | 10 | – | 105 | 187 | 223 | 205 | 305 | 410 | 46 | – | 36 |
| 320 | 400 | 340 | 10 | – | 120 | 211 | 249 | 230 | 340 | 460 | 55 | – | 46 |

- Note

DNGZS-250/-320-...-PPV-A:
The central trunnion mounting is fitted as standard tightly screwed with the tie rods in the cylinder mid-section. As a special design, mounting is possible between the dimensions XG and XJ.
The required dimension XV must be entered in the order (➔ 18).

# Standard cylinders DNG/DNGL/DNGZK/DNGZS, ISO 15552

Technical data

| Ordering data | | | | | | | |
|---|---|---|---|---|---|---|---|
| Design | Stroke [mm] | Piston ∅ 32 [mm] Part No. | Type[1)] | Piston ∅ 40 [mm] Part No. | Type[1)] | Piston ∅ 50 [mm] Part No. | Type[1)] |
| Basic version | | | | | | | |
| | 25 | **36 321** | **DNG-32-25-PPV-A** | **36 333** | **DNG-40-25-PPV-A** | **36 345** | **DNG-50-25-PPV-A** |
| | 40 | **36 322** | **DNG-32-40-PPV-A** | **36 334** | **DNG-40-40-PPV-A** | **36 346** | **DNG-50-40-PPV-A** |
| | 50 | **36 323** | **DNG-32-50-PPV-A** | **36 335** | **DNG-40-50-PPV-A** | **36 347** | **DNG-50-50-PPV-A** |
| | 80 | **36 324** | **DNG-32-80-PPV-A** | **36 336** | **DNG-40-80-PPV-A** | **36 348** | **DNG-50-80-PPV-A** |
| | 100 | **36 325** | **DNG-32-100-PPV-A** | **36 337** | **DNG-40-100-PPV-A** | **36 349** | **DNG-50-100-PPV-A** |
| | 125 | **36 326** | **DNG-32-125-PPV-A** | **36 338** | **DNG-40-125-PPV-A** | **36 350** | **DNG-50-125-PPV-A** |
| | 160 | **36 327** | **DNG-32-160-PPV-A** | **36 339** | **DNG-40-160-PPV-A** | **36 351** | **DNG-50-160-PPV-A** |
| | 200 | **36 328** | **DNG-32-200-PPV-A** | **36 340** | **DNG-40-200-PPV-A** | **36 352** | **DNG-50-200-PPV-A** |
| | 250 | **36 329** | **DNG-32-250-PPV-A** | **36 341** | **DNG-40-250-PPV-A** | **36 353** | **DNG-50-250-PPV-A** |
| | 320 | **36 330** | **DNG-32-320-PPV-A** | **36 342** | **DNG-40-320-PPV-A** | **36 354** | **DNG-50-320-PPV-A** |
| | 400 | **36 331** | **DNG-32-400-PPV-A** | **36 343** | **DNG-40-400-PPV-A** | **36 355** | **DNG-50-400-PPV-A** |
| | 500 | **36 332** | **DNG-32-500-PPV-A** | **36 344** | **DNG-40-500-PPV-A** | **36 356** | **DNG-50-500-PPV-A** |
| Variable stroke | 10 … 2,000 | **30 000** | **DNG-32-…-PPV-A** | **30 001** | **DNG-40-…-PPV-A** | **30 002** | **DNG-50-…-PPV-A** |
| Variant S2 | 10 … 2,000 | **34 625** | **DNG-32-…-PPV-A-S2** | **34 626** | **DNG-40-…-PPV-A-S2** | **34 627** | **DNG-50-…-PPV-A-S2** |
| Variant S3 | 10 … 2,000 | **34 973** | **DNG-32-…-PPV-A-S3** | **34 974** | **DNG-40-…-PPV-A-S3** | **34 975** | **DNG-50-…-PPV-A-S3** |
| Variant S6 | 10 … 2,000 | **34 854** | **DNG-32-…-PPV-A-S6** | **34 855** | **DNG-40-…-PPV-A-S6** | **34 856** | **DNG-50-…-PPV-A-S6** |
| Variant S8 | 10 … 2,000 | **35 453** | **DNG-32-…-PPV-A-S8** | **35 454** | **DNG-40-…-PPV-A-S8** | **35 455** | **DNG-50-…-PPV-A-S8** |
| with non-rotating piston rod | | | | | | | |
| Variable stroke | 10 … 300 | **30 049** | **DNGL-32-…-PPV-A** | – | | – | |
| | 10 … 400 | – | | **30 050** | **DNGL-40-…-PPV-A** | – | |
| | 10 … 500 | – | | – | | **30 051** | **DNGL-50-…-PPV-A** |
| | 10 … 600 | – | | – | | – | |
| Variant S2 | 10 … 300 | **35 338** | **DNGL-32-…-PPV-A-S2** | – | | – | |
| | 10 … 400 | – | | **35 339** | **DNGL-40-…-PPV-A-S2** | – | |
| | 10 … 500 | – | | – | | **35 340** | **DNGL-50-…-PPV-A-S2** |
| | 10 … 600 | – | | – | | – | |
| Variant S6 | 10 … 300 | **35 344** | **DNGL-32-…-PPV-A-S6** | – | | – | |
| | 10 … 400 | – | | **35 345** | **DNGL-40-…-PPV-A-S6** | – | |
| | 10 … 500 | – | | – | | **35 346** | **DNGL-50-…-PPV-A-S6** |
| | 10 … 600 | – | | – | | – | |
| with adjustable central trunnion mounting | | | | | | | |
| | 40 | **36 405** | **DNGZK-32-40-PPV-A** | **36 416** | **DNGZK-40-40-PPV-A** | **36 427** | **DNGZK-50-40-PPV-A** |
| | 50 | **36 406** | **DNGZK-32-50-PPV-A** | **36 417** | **DNGZK-40-50-PPV-A** | **36 428** | **DNGZK-50-50-PPV-A** |
| | 80 | **36 407** | **DNGZK-32-80-PPV-A** | **36 418** | **DNGZK-40-80-PPV-A** | **36 429** | **DNGZK-50-80-PPV-A** |
| | 100 | **36 408** | **DNGZK-32-100-PPV-A** | **36 419** | **DNGZK-40-100-PPV-A** | **36 430** | **DNGZK-50-100-PPV-A** |
| | 125 | **36 409** | **DNGZK-32-125-PPV-A** | **36 420** | **DNGZK-40-125-PPV-A** | **36 431** | **DNGZK-50-125-PPV-A** |
| | 160 | **36 410** | **DNGZK-32-160-PPV-A** | **36 421** | **DNGZK-40-160-PPV-A** | **36 432** | **DNGZK-50-160-PPV-A** |
| | 200 | **36 411** | **DNGZK-32-200-PPV-A** | **36 422** | **DNGZK-40-200-PPV-A** | **36 433** | **DNGZK-50-200-PPV-A** |
| | 250 | **36 412** | **DNGZK-32-250-PPV-A** | **36 423** | **DNGZK-40-250-PPV-A** | **36 434** | **DNGZK-50-250-PPV-A** |
| | 320 | **36 413** | **DNGZK-32-320-PPV-A** | **36 424** | **DNGZK-40-320-PPV-A** | **36 435** | **DNGZK-50-320-PPV-A** |
| | 400 | **36 414** | **DNGZK-32-400-PPV-A** | **36 425** | **DNGZK-40-400-PPV-A** | **36 436** | **DNGZK-50-400-PPV-A** |
| | 500 | **36 415** | **DNGZK-32-500-PPV-A** | **36 426** | **DNGZK-40-500-PPV-A** | **36 437** | **DNGZK-50-500-PPV-A** |
| Variable stroke | 10 … 2,000 | **34 440** | **DNGZK-32-…-PPV-A** | **34 441** | **DNGZK-40-…-PPV-A** | **34 442** | **DNGZK-50-…-PPV-A** |
| Variant S3 | 10 … 2,000 | **34 938** | **DNGZK-32-…-PPV-A-S3** | **34 939** | **DNGZK-40-…-PPV-A-S3** | **34 940** | **DNGZK-50-…-PPV-A-S3** |
| Variant S6 | 10 … 2,000 | **34 947** | **DNGZK-32-…-PPV-A-S6** | **34 948** | **DNGZK-40-…-PPV-A-S6** | **34 949** | **DNGZK-50-…-PPV-A-S6** |
| Variant S8 | 10 … 2,000 | **35 499** | **DNGZK-32-…-PPV-A-S8** | **35 520** | **DNGZK-40-…-PPV-A-S8** | **35 521** | **DNGZK-50-…-PPV-A-S8** |

1) The scope of delivery includes a hex nut for the piston rod thread.

# Standard cylinders DNG/DNGL/DNGZK/DNGZS, ISO 15552

Technical data

| Ordering data | | | | | | | |
|---|---|---|---|---|---|---|---|
| Design | Stroke [mm] | Piston ∅ 63 [mm] Part No. | Type[1)] | Piston ∅ 80 [mm] Part No. | Type[1)] | Piston ∅ 100 [mm] Part No. | Type[1)] |
| Basic version | | | | | | | |
| | 25 | 36 357 | DNG-63-25-PPV-A | 36 369 | DNG-80-25-PPV-A | 36 381 | DNG-100-25-PPV-A |
| | 40 | 36 358 | DNG-63-40-PPV-A | 36 370 | DNG-80-40-PPV-A | 36 382 | DNG-100-40-PPV-A |
| | 50 | 36 359 | DNG-63-50-PPV-A | 36 371 | DNG-80-50-PPV-A | 36 383 | DNG-100-50-PPV-A |
| | 80 | 36 360 | DNG-63-80-PPV-A | 36 372 | DNG-80-80-PPV-A | 36 384 | DNG-100-80-PPV-A |
| | 100 | 36 361 | DNG-63-100-PPV-A | 36 373 | DNG-80-100-PPV-A | 36 385 | DNG-100-100-PPV-A |
| | 125 | 36 362 | DNG-63-125-PPV-A | 36 374 | DNG-80-125-PPV-A | 36 386 | DNG-100-125-PPV-A |
| | 160 | 36 363 | DNG-63-160-PPV-A | 36 375 | DNG-80-160-PPV-A | 36 387 | DNG-100-160-PPV-A |
| | 200 | 36 364 | DNG-63-200-PPV-A | 36 376 | DNG-80-200-PPV-A | 36 388 | DNG-100-200-PPV-A |
| | 250 | 36 365 | DNG-63-250-PPV-A | 36 377 | DNG-80-250-PPV-A | 36 389 | DNG-100-250-PPV-A |
| | 320 | 36 366 | DNG-63-320-PPV-A | 36 378 | DNG-80-320-PPV-A | 36 390 | DNG-100-320-PPV-A |
| | 400 | 36 367 | DNG-63-400-PPV-A | 36 379 | DNG-80-400-PPV-A | 36 391 | DNG-100-400-PPV-A |
| | 500 | 36 368 | DNG-63-500-PPV-A | 36 380 | DNG-80-500-PPV-A | 36 392 | DNG-100-500-PPV-A |
| Variable stroke | 10 … 2,000 | 30 003 | DNG-63-…-PPV-A | 30 004 | DNG-80-…-PPV-A | 30 005 | DNG-100-…-PPV-A |
| Variant S2 | 10 … 2,000 | 34 628 | DNG-63-…-PPV-A-S2 | 34 629 | DNG-80-…-PPV-A-S2 | 34 630 | DNG-100-…-PPV-A-S2 |
| Variant S3 | 10 … 2,000 | 34 976 | DNG-63-…-PPV-A-S3 | 34 977 | DNG-80-…-PPV-A-S3 | 34 978 | DNG-100-…-PPV-A-S3 |
| Variant S6 | 10 … 2,000 | 34 857 | DNG-63-…-PPV-A-S6 | 34 858 | DNG-80-…-PPV-A-S6 | 34 859 | DNG-100-…-PPV-A-S6 |
| Variant S8 | 10 … 2,000 | 35 456 | DNG-63-…-PPV-A-S8 | 35 457 | DNG-80-…-PPV-A-S8 | 35 458 | DNG-100-…-PPV-A-S8 |
| | | | | | | | |
| with non-rotating piston rod | | | | | | | |
| Variable stroke | 10 … 300 | – | | – | | – | |
| | 10 … 400 | – | | – | | – | |
| | 10 … 500 | 30 052 | DNGL-63-…-PPV-A | – | | – | |
| | 10 … 600 | – | | 30 053 | DNGL-80-…-PPV-A | 30 054 | DNGL-100-…-PPV-A |
| Variant S2 | 10 … 300 | – | | – | | – | |
| | 10 … 400 | – | | – | | – | |
| | 10 … 500 | 35 341 | DNGL-63-…-PPV-A-S2 | – | | – | |
| | 10 … 600 | – | | 35 342 | DNGL-80-…-PPV-A-S2 | 35 343 | DNGL-100-…-PPV-A-S2 |
| Variant S6 | 10 … 300 | – | | – | | – | |
| | 10 … 400 | – | | – | | – | |
| | 10 … 500 | 35 347 | DNGL-63-…-PPV-A-S6 | – | | – | |
| | 10 … 600 | – | | 35 348 | DNGL-80-…-PPV-A-S6 | 35 349 | DNGL-100-…-PPV-A-S6 |
| | | | | | | | |
| with adjustable central trunnion mounting | | | | | | | |
| | 40 | 36 438 | DNGZK-63-40-PPV-A | – | | – | |
| | 50 | 36 439 | DNGZK-63-50-PPV-A | 36 449 | DNGZK-80-50-PPV-A | 36 459 | DNGZK-100-50-PPV-A |
| | 80 | 36 440 | DNGZK-63-80-PPV-A | 36 450 | DNGZK-80-80-PPV-A | 36 460 | DNGZK-100-80-PPV-A |
| | 100 | 36 441 | DNGZK-63-100-PPV-A | 36 451 | DNGZK-80-100-PPV-A | 36 461 | DNGZK-100-100-PPV-A |
| | 125 | 36 442 | DNGZK-63-125-PPV-A | 36 452 | DNGZK-80-125-PPV-A | 36 462 | DNGZK-100-125-PPV-A |
| | 160 | 36 443 | DNGZK-63-160-PPV-A | 36 453 | DNGZK-80-160-PPV-A | 36 463 | DNGZK-100-160-PPV-A |
| | 200 | 36 444 | DNGZK-63-200-PPV-A | 36 454 | DNGZK-80-200-PPV-A | 36 464 | DNGZK-100-200-PPV-A |
| | 250 | 36 445 | DNGZK-63-250-PPV-A | 36 455 | DNGZK-80-250-PPV-A | 36 465 | DNGZK-100-250-PPV-A |
| | 320 | 36 446 | DNGZK-63-320-PPV-A | 36 456 | DNGZK-80-320-PPV-A | 36 466 | DNGZK-100-320-PPV-A |
| | 400 | 36 447 | DNGZK-63-400-PPV-A | 36 457 | DNGZK-80-400-PPV-A | 36 467 | DNGZK-100-400-PPV-A |
| | 500 | 36 448 | DNGZK-63-500-PPV-A | 36 458 | DNGZK-80-500-PPV-A | 36 468 | DNGZK-100-500-PPV-A |
| Variable stroke | 10 … 2,000 | 34 443 | DNGZK-63-…-PPV-A | 34 444 | DNGZK-80-…-PPV-A | 34 445 | DNGZK-100-…-PPV-A |
| Variant S3 | 10 … 2,000 | 34 941 | DNGZK-63-…-PPV-A-S3 | 34 942 | DNGZK-80-…-PPV-A-S3 | 34 943 | DNGZK-100-…-PPV-A-S3 |
| Variant S6 | 10 … 2,000 | 34 950 | DNGZK-63-…-PPV-A-S6 | 34 951 | DNGZK-80-…-PPV-A-S6 | 34 952 | DNGZK-100-…-PPV-A-S6 |
| Variant S8 | 10 … 2,000 | 35 522 | DNGZK-63-…-PPV-A-S8 | 35 523 | DNGZK-80-…-PPV-A-S8 | 35 524 | DNGZK-100-…-PPV-A-S8 |

1) The scope of delivery includes a hex nut for the piston rod thread.

| Ordering data | | | | | | | |
|---|---|---|---|---|---|---|---|
| Design | Stroke [mm] | Piston ∅ 32 [mm] Part No. | Type[1] | Piston ∅ 40 [mm] Part No. | Type[1] | Piston ∅ 50 [mm] Part No. | Type[1] |
| with non-rotating piston rod and adjustable central trunnion mounting | | | | | | | |
| Variable stroke | 10 … 300 | **35 320** | **DNGLZ-32-…-PPV-A** | – | | – | |
| | 10 … 400 | – | | **35 321** | **DNGLZ-40-…-PPV-A** | – | |
| | 10 … 500 | – | | – | | **35 322** | **DNGLZ-50-…-PPV-A** |
| | 10 … 600 | – | | – | | – | |
| Variant S6 | 10 … 300 | **35 332** | **DNGLZ-32-…-PPV-A-S6** | – | | – | |
| | 10 … 400 | – | | **35 333** | **DNGLZ-40-…-PPV-A-S6** | – | |
| | 10 … 500 | – | | – | | **35 334** | **DNGLZ-50-…-PPV-A-S6** |
| | 10 … 600 | – | | – | | – | |

1) The scope of delivery includes a hex nut for the piston rod thread.

| Ordering data | | | | | | | |
|---|---|---|---|---|---|---|---|
| Design | Stroke [mm] | Piston ∅ 125 [mm] Part No. | Type[1] | Piston ∅ 160 [mm] Part No. | Type[1] | Piston ∅ 200 [mm] Part No. | Type[1] |
| Basic version | | | | | | | |
| | 25 | **36 393** | **DNG-125-25-PPV-A** | – | | – | |
| | 40 | **36 394** | **DNG-125-40-PPV-A** | | | | |
| | 50 | **36 395** | **DNG-125-50-PPV-A** | | | | |
| | 80 | **36 396** | **DNG-125-80-PPV-A** | | | | |
| | 100 | **36 397** | **DNG-125-100-PPV-A** | | | | |
| | 125 | **36 398** | **DNG-125-125-PPV-A** | | | | |
| | 160 | **36 399** | **DNG-125-160-PPV-A** | | | | |
| | 200 | **36 400** | **DNG-125-200-PPV-A** | | | | |
| | 250 | **36 401** | **DNG-125-250-PPV-A** | | | | |
| | 320 | **36 402** | **DNG-125-320-PPV-A** | | | | |
| | 400 | **36 403** | **DNG-125-400-PPV-A** | | | | |
| | 500 | **36 404** | **DNG-125-500-PPV-A** | | | | |
| Variable stroke | 10 … 2,000 | **30 006** | **DNG-125-…-PPV-A** | **33 024** | **DNG-160-…-PPV-A** | **33 025** | **DNG-200-…-PPV-A** |
| | 10 … 1,100 | – | | – | | – | |
| Variant S2 | 10 … 2,000 | **34 631** | **DNG-125-…-PPV-A-S2** | **34 632** | **DNG-160-…-PPV-A-S2** | **34 633** | **DNG-200-…-PPV-A-S2** |
| | 10 … 1,100 | – | | – | | – | |
| Variant S3 | 10 … 2,000 | **34 979** | **DNG-125-…-PPV-A-S3** | **34 980** | **DNG-160-…-PPV-A-S3** | **34 981** | **DNG-200-…-PPV-A-S3** |
| | 10 … 1,100 | – | | – | | – | |
| Variant S6 | 10 … 2,000 | **34 860** | **DNG-125-…-PPV-A-S6** | **34 861** | **DNG-160-…-PPV-A-S6** | **34 862** | **DNG-200-…-PPV-A-S6** |
| | 10 … 1,100 | – | | – | | – | |
| Variant S8 | 10 … 2,000 | **35 459** | **DNG-125-…-PPV-A-S8** | **35 497** | **DNG-160-…-PPV-A-S8** | **35 498** | **DNG-200-…-PPV-A-S8** |
| | 10 … 1,100 | – | | – | | – | |
| | | | | | | | |
| with adjustable central trunnion mounting | | | | | | | |
| Variable stroke | 10 … 2,000 | **34 446** | **DNGZK-125-…-PPV-A** | **34 447** | **DNGZK-160-…-PPV-A** | **34 456** | **DNGZK-200-…-PPV-A** |
| Variant S3 | 10 … 2,000 | **34 944** | **DNGZK-125-…-PPV-A-S3** | **34 945** | **DNGZK-160-…-PPV-A-S3** | **34 946** | **DNGZK-200-…-PPV-A-S3** |
| Variant S6 | 10 … 2,000 | **34 953** | **DNGZK-125-…-PPV-A-S6** | **34 954** | **DNGZK-160-…-PPV-A-S6** | **34 955** | **DNGZK-200-…-PPV-A-S6** |
| Variant S8 | 10 … 2,000 | **35 525** | **DNGZK-125-…-PPV-A-S8** | **35 526** | **DNGZK-160-…-PPV-A-S8** | **35 527** | **DNGZK-200-…-PPV-A-S8** |

1) The scope of delivery includes a hex nut for the piston rod thread.

| Ordering data | | | | |
|---|---|---|---|---|
| Design | Stroke [mm] | Piston ∅ 63 [mm] Part No. Type[1)] | Piston ∅ 80 [mm] Part No. Type[1)] | Piston ∅ 100 [mm] Part No. Type[1)] |
| with non-rotating piston rod and adjustable central trunnion mounting | | | | |
| Variable stroke | 10 … 300 | – | – | – |
| | 10 … 400 | – | – | – |
| | 10 … 500 | **35 323 DNGLZ-63-…-PPV-A** | – | |
| | 10 … 600 | – | **35 324 DNGLZ-80-…-PPV-A** | **35 325 DNGLZ-100-…-PPV-A** |
| Variant S6 | 10 … 300 | | – | – |
| | 10 … 400 | – | – | – |
| | 10 … 500 | **35 335 DNGLZ-63-…-PPV-A-S6** | – | – |
| | 10 … 600 | – | **35 336 DNGLZ-80-…-PPV-A-S6** | **35 337 DNGLZ-100-…-PPV-A-S6** |

1) The scope of delivery includes a hex nut for the piston rod thread.

| Ordering data | | | |
|---|---|---|---|
| Design | Stroke [mm] | Piston ∅ 250 [mm] Part No. Type[1)] | Piston ∅ 320 [mm] Part No. Type[1)] |
| Basic version | | | |
| | 25 | – | – |
| | 40 | | |
| | 50 | | |
| | 80 | | |
| | 100 | | |
| | 125 | | |
| | 160 | | |
| | 200 | | |
| | 250 | | |
| | 320 | | |
| | 400 | | |
| | 500 | | |
| Variable stroke | 10 … 2,000 | – | – |
| | 10 … 1,100 | **151 892 DNG-250-…-PPV-A** | **151 897 DNG-320-…-PPV-A** |
| Variant S2 | 10 … 2,000 | – | – |
| | 10 … 1,100 | **151 893 DNG-250-…-PPV-A-S2** | **151 898 DNG-320-…-PPV-A-S2** |
| Variant S3 | 10 … 2,000 | – | – |
| | 10 … 1,100 | **151 894 DNG-250-…-PPV-A-S3** | **151 899 DNG-320-…-PPV-A-S3** |
| Variant S6 | 10 … 2,000 | – | – |
| | 10 … 1,100 | **151 895 DNG-250-…-PPV-A-S6** | **151 900 DNG-320-…-PPV-A-S6** |
| Variant S8 | 10 … 2,000 | – | – |
| | 10 … 1,100 | **151 896 DNG-250-…-PPV-A-S8** | **151 901 DNG-320-…-PPV-A-S8** |
| | | | |
| with fixed central trunnion mounting | | | |
| Variable stroke | 10 … 1,100 | ➔ 18 | |

1) The scope of delivery includes a hex nut for the piston rod thread.

# Standard cylinders DNG/DNGL/DNGZK/DNGZS, to ISO 15552

Ordering data – Modular product DNGZS

| M Mandatory data | | | | | | O Options | | |
|---|---|---|---|---|---|---|---|---|
| **Module No.** | **Function** | **Piston ∅** | **Stroke** | **Cushioning** | **Position sensing** | **Trunnion flange position** | **Tempera-ture-resistant** | **Corrosion protection** |
| 157 500<br>157 504 | DNGZS | 250<br>320 | 10 … 1 100 | PPV | A | …XV | S6 | S3<br>S8 |
| **Ordering example** | | | | | | | | |
| **157 504** | **DNGZS** – | **320** – | **600** – | **PPV** – | **A** – | **215XV** – | **S6** – | **S3** |

**Ordering table**

| | Size | 250 | 320 | Condi-tions | Code | | Enter code |
|---|---|---|---|---|---|---|---|
| M | Module No. | **157 500** | **157 504** | | | | |
| | Function | Standard cylinder, double-acting, with central trunnion mounting to ISO 15552 | | | **DNGZS** | | DNGZS |
| | Piston ∅ [mm] | 250 | 320 | | **-…** | | |
| | Stroke [mm] | 10 … 1 100 | | | **-…** | | |
| | Cushioning | Pneumatic cushioning adjustable at both ends | | | **-PPV** | | -PPV |
| | Position sensing | For proximity sensing | | | **-A** | | -A |
| O | Trunnion flange position [mm] | 187 … 1 323 | 211 … 1 349 | 1 | **-…XV** | | |
| | Temperature-resistant | Heat-resistant seals up to max. 120 °C | | | **-S6** | | |
| | Corrosion protection | Stainless steel piston rod | | | **- S3** | | |
| | | High corrosion protection including piston rod, stainless steel | | 2 | **-S8** | | |

1 **…XV** Trunnion flange at standard mid-position of cylinder:

Piston ∅ 250 mm: $205\ \text{mm} + \frac{\text{Stroke}}{2}$

Piston ∅ 320 mm: $230\ \text{mm} + \frac{\text{Stroke}}{2}$

2 **S8** Not with S6.

**Transfer order code**

| | | | | | | | | | | | | | | | |
|---|---|---|---|---|---|---|---|---|---|---|---|---|---|---|---|
| | **DNGZS** | – | | – | | – | **PPV** | – | **A** | – | | – | | – | |

**Adapter kit DPNG**
for piston ∅ 32 ... 100 mm

Material:
Flange: Wrought aluminium alloy;
Threaded studs, hex nuts:
Galvanised steel
Free of copper, PTFE and silicone

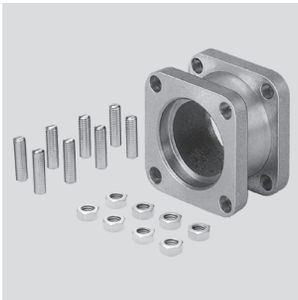

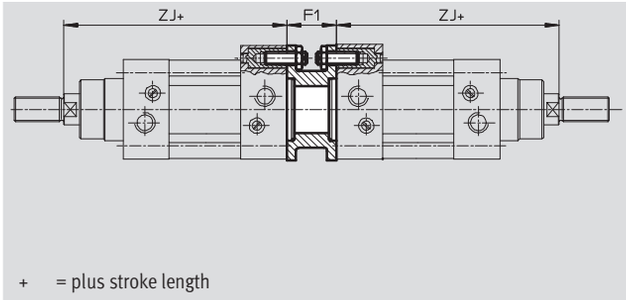


- Note

The maximum overall stroke length may not be exceeded when combining cylinders and the adapter kit.

**Dimensions and ordering data**

| For ∅ | F1 | ZJ | Max. overall stroke length [mm] | CRC[1)] | Weight [g] | Part No. | Type |
|---|---|---|---|---|---|---|---|
| 32 | 27 | 120 | 1,000 | 2 | 85 | **159 485** | **DPNG-32** |
| 40 | 27 | 135 | 1,000 | 2 | 115 | **159 486** | **DPNG-40** |
| 50 | 32 | 143 | 1,000 | 2 | 210 | **159 487** | **DPNG-50** |
| 63 | 28 | 158 | 1,000 | 2 | 360 | **159 488** | **DPNG-63** |
| 80 | 38 | 174 | 1,000 | 2 | 620 | **159 489** | **DPNG-80** |
| 100 | 38 | 189 | 1,000 | 2 | 1,190 | **159 490** | **DPNG-100** |

1) Corrosion resistance class 2 according to Festo standard 940 070
Components requiring moderate corrosion resistance. Externally visible parts with primarily decorative surface requirements which are in direct contact with a surrounding industrial atmosphere or media such as cooling or lubricating agents

## Connecting two cylinders with identical piston ∅ as a 3 or 4-position cylinder

A 3 or 4-position cylinder consists of two separate cylinders whose piston rods advance in opposing directions. This means that depending upon actuation and stroke pattern, this type of cylinder can assume up to four positions. In each case the cylinder is driven precisely against a stop. Note that when one end of the piston rod is fixed, the cylinder barrel executes the movement. The cylinder must be connected with flexible line connections.

### To achieve 3 positions

Two cylinders with identical stroke length must be connected together.

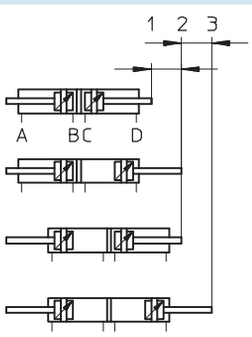


### To achieve 4 positions

Two cylinders with different stroke lengths must be connected together.

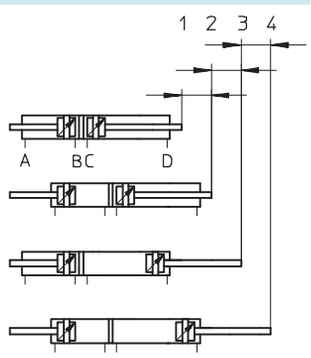

**Foot mounting HNG**

Material:
Galvanised steel
Free of copper, PTFE and silicone

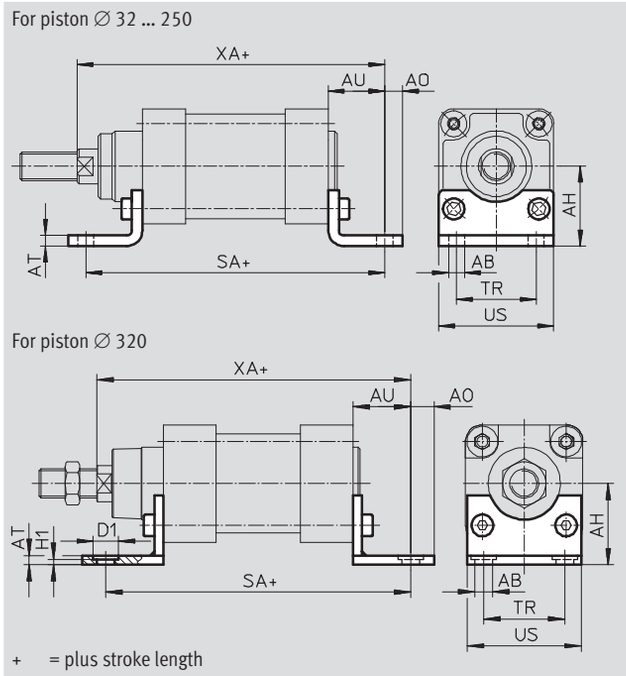


| Dimensions and ordering data | | | | | | | | | | | | | | | |
|---|---|---|---|---|---|---|---|---|---|---|---|---|---|---|---|
| For ∅ [mm] | AB ∅ H14 | AH | AO | AT | AU | D1 | H1 | SA | TR | US | XA | CRC[1] | Weight [g] | Part No. | Type |
| 32 | 7 | 32 | 6.5 | 4 | 24 | – | – | 142 | 32 | 45 | 144 | 2 | 225 | **32 947** | **HNG-32** |
| 40 | 10 | 36 | 9 | 4 | 28 | – | – | 161 | 36 | 54 | 163 | 2 | 270 | **32 948** | **HNG-40** |
| 50 | 10 | 45 | 9.5 | 5 | 32 | – | – | 170 | 45 | 64 | 175 | 2 | 400 | **32 949** | **HNG-50** |
| 63 | 10 | 50 | 12.5 | 5 | 32 | – | – | 185 | 50 | 75 | 190 | 2 | 480 | **32 950** | **HNG-63** |
| 80 | 12 | 63 | 15 | 6 | 41 | – | – | 210 | 63 | 93 | 215 | 2 | 1,080 | **32 951** | **HNG-80** |
| 100 | 14.5 | 71 | 17.5 | 6 | 41 | – | – | 220 | 75 | 110 | 230 | 2 | 1,250 | **32 952** | **HNG-100** |
| 125 | 16.5 | 90 | 22 | 8 | 45 | – | – | 250 | 90 | 131 | 270 | 2 | 2,025 | **32 953** | **HNG-125** |
| 160 | 18.5 | 115 | 20 | 10 | 60 | – | – | 300 | 115 | 169 | 320 | 2 | 2,200 | **34 476** | **HNG-160** |
| 200 | 24 | 135 | 30 | 12 | 70 | – | – | 320 | 135 | 214 | 345 | 2 | 3,795 | **34 477** | **HNG-200** |
| 250 | 28 | 165 | 35 | 20 | 75 | – | – | 350 | 165 | 270 | 380 | 2 | 8,000 | **157 510** | **HNG-250** |
| 320 | 35 | 185 | 40 | 25 | 85 | 60 | 23 | 390 | 200 | 340 | 425 | 2 | 13,000 | **157 511** | **HNG-320** |

1) Corrosion resistance class 2 according to Festo standard 940 070
Components requiring moderate corrosion resistance. Externally visible parts with primarily decorative surface requirements which are in direct contact with a surrounding industrial atmosphere or media such as cooling or lubricating agents

## Flange mounting FNG

Material:
FNG-32 ... 100: Galvanised steel
FNG-125 ... 320: Painted nodular graphite cast iron
Free of copper, PTFE and silicone

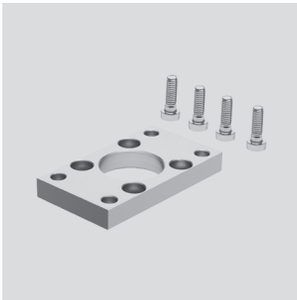

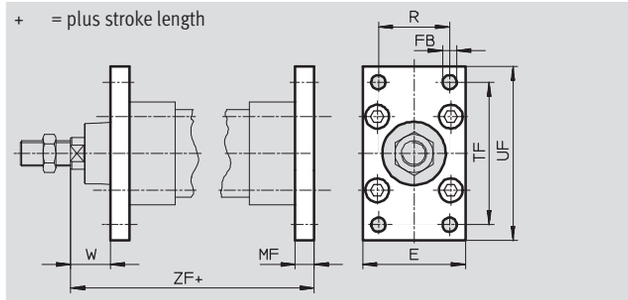


| Dimensions and ordering data | | | | | | | | | | | | |
|---|---|---|---|---|---|---|---|---|---|---|---|---|
| For ∅ [mm] | E | FB ∅ | MF | R | TF | UF | W | ZF | CRC[1] | Weight [g] | Part No. | Type |
| 32 | 45 | 7 | 10 | 32 | 64 | 80 | 16 | 130 | 2 | 245 | **32 940** | **FNG-32** |
| 40 | 54 | 9 | 10 | 36 | 72 | 90 | 20 | 145 | 2 | 290 | **32 941** | **FNG-40** |
| 50 | 65 | 9 | 12 | 45 | 90 | 110 | 25 | 155 | 2 | 520 | **32 942** | **FNG-50** |
| 63 | 75 | 9 | 12 | 50 | 100 | 120 | 25 | 170 | 2 | 690 | **32 943** | **FNG-63** |
| 80 | 93 | 12 | 16 | 63 | 126 | 150 | 30 | 190 | 2 | 1,660 | **32 944** | **FNG-80** |
| 100 | 110 | 14 | 16 | 75 | 150 | 175 | 35 | 205 | 2 | 2,395 | **32 945** | **FNG-100** |
| 125 | 140 | 16 | 20 | 90 | 180 | 220 | 45 | 245 | 2 | 4,560 | **32 946** | **FNG-125** |
| 160 | 180 | 18 | 20 | 115 | 230 | 280 | 60 | 280 | 2 | 6,200 | **34 478** | **FNG-160** |
| 200 | 220 | 22 | 25 | 135 | 270 | 320 | 70 | 300 | 2 | 8,200 | **34 479** | **FNG-200** |
| 250 | 270 | 26 | 25 | 165 | 330 | 390 | 80 | 330 | 2 | 13 100 | **157 508** | **FNG-250** |
| 320 | 340 | 33 | 30 | 200 | 400 | 470 | 90 | 370 | 2 | 21 500 | **157 509** | **FNG-320** |

1) Corrosion resistance class 2 according to Festo standard 940 070
Components requiring moderate corrosion resistance. Externally visible parts with primarily decorative surface requirements which are in direct contact with a surrounding industrial atmosphere or media such as cooling or lubricating agents

## Trunnion flange ZNG

for trunnion mounting LNZG

Material:
Corrosion resistant cast steel
Free of copper, PTFE and silicone

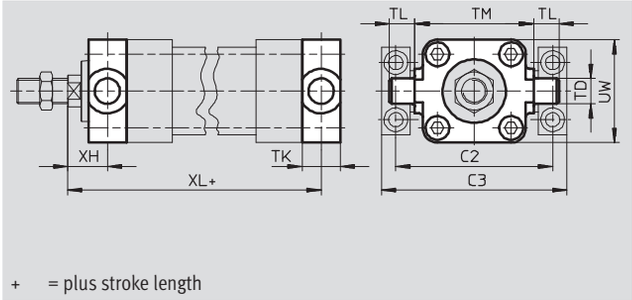


| Dimensions and ordering data | | | | | | | | | | | | |
|---|---|---|---|---|---|---|---|---|---|---|---|---|
| For ∅ [mm] | C2 | C3 | TD ∅ e9 | TK | TL | TM | UW | XH | XL | CRC[1] | Weight [g] | Part No. | Type |
| 32 | 71 | 86 | 12 | 16 | 12 | 50 | 50 | 18 | 128 | 2 | 190 | **31 754** | **ZNG-32** |
| 40 | 87 | 105 | 16 | 20 | 16 | 63 | 55 | 20 | 145 | 2 | 330 | **31 755** | **ZNG-40** |
| 50 | 99 | 117 | 16 | 24 | 16 | 75 | 65 | 25 | 155 | 2 | 535 | **31 756** | **ZNG-50** |
| 63 | 116 | 136 | 20 | 24 | 20 | 90 | 75 | 25 | 170 | 2 | 800 | **31 757** | **ZNG-63** |
| 80 | 136 | 156 | 20 | 28 | 20 | 110 | 100 | 32 | 188 | 2 | 1,380 | **31 758** | **ZNG-80** |
| 100 | 164 | 189 | 25 | 38 | 25 | 132 | 120 | 32 | 208 | 2 | 2,745 | **31 759** | **ZNG-100** |
| 125 | 192 | 217 | 25 | 50 | 25 | 160 | 150 | 40 | 250 | 2 | 5,100 | **31 760** | **ZNG-125** |

1) Corrosion resistance class 2 according to Festo standard 940 070
Components requiring moderate corrosion resistance. Externally visible parts with primarily decorative surface requirements which are in direct contact with a surrounding industrial atmosphere or media such as cooling or lubricating agents

**LNZG trunnion support**

Material:
Trunnion support:
32 … 125: Anodised aluminium
160 … 320: Galvanised steel
Plain bearing:
32 … 200: Plastic
250 … 320: Sintered bronze

Free of copper, PTFE and silicone

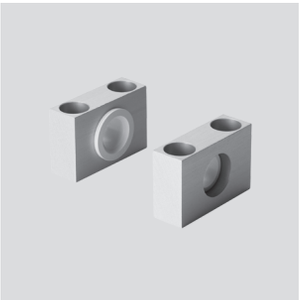

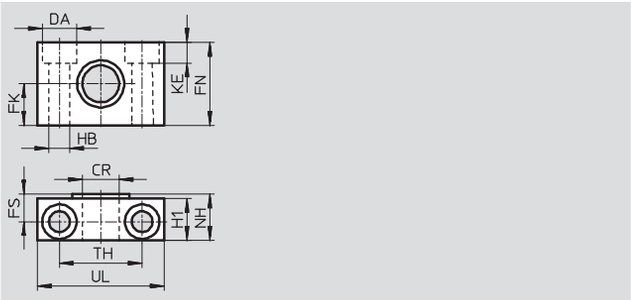


| Dimensions and ordering data | | | | | | | | | | | | | | | |
|---|---|---|---|---|---|---|---|---|---|---|---|---|---|---|---|
| For ∅ [mm] | CR ∅ | DA ∅ H13 | FK ∅ | FN | FS | H1 | HB ∅ H13 | KE | NH | TH | UL | CRC[1] | Weight [g] | Part No. | Type |
| 32 | 12 D11 | 11 | 15 ±0.1 | 30 | 10.5 | 15 | 6.6 | 6.8 | 18 | 32 ±0.2 | 46 | 2 | 125 | **32 959** | **LNZG-32** |
| 40/50 | 16 D11 | 15 | 18 ±0.1 | 36 | 12 | 18 | 9 | 9 | 21 | 36 ±0.2 | 55 | 2 | 400 | **32 960** | **LNZG-40/50** |
| 63/80 | 20 D11 | 18 | 20 ±0.1 | 40 | 13 | 20 | 11 | 11 | 23 | 42 ±0.2 | 65 | 2 | 480 | **32 961** | **LNZG-63/80** |
| 100/125 | 25 D11 | 20 | 25 ±0.1 | 50 | 16 | 24.5 | 14 | 13 | 28.5 | 50 ±0.2 | 75 | 2 | 960 | **32 962** | **LNZG-100/125** |
| 160/200 | 32 D11 | 26 | 30 ±0.2 | 60 | 22.5 | 36 | 18 | 17 | 40 | 60 ±0.3 | 92 | 2 | 1,965 | **35 780** | **LNZG-160/200** |
| 250 | 40 G7 | 33 | 35 ±0.2 | 70 | 27.5 | 45 | 22 | 21.5 | 50 | 90 ±0.3 | 140 | 2 | 5,500 | **157 516** | **LNZG-250** |
| 320 | 50 G7 | 40 | 40 ±0.2 | 80 | 32.5 | 55 | 26 | 21.5 | 60 | 100 ±0.3 | 150 | 2 | 6,580 | **157 517** | **LNZG-320** |

1) Corrosion resistance class 2 according to Festo standard 940 070
Components requiring moderate corrosion resistance. Externally visible parts with primarily decorative surface requirements which are in direct contact with a surrounding industrial atmosphere or media such as cooling or lubricating agents

**Swivel flange SNG**
for clevis foot LSNG/LSNSG

Material:
Die-cast aluminium

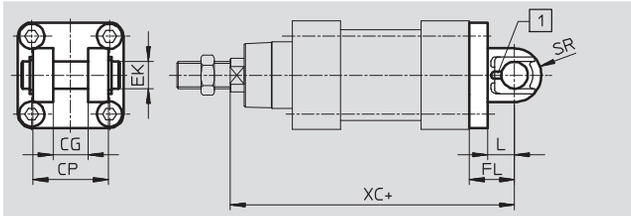


1 The pivot pin is secured against rotation with a dowel pin.
\+ = plus stroke length

| Dimensions and ordering data | | | | | | | | | | | |
|---|---|---|---|---|---|---|---|---|---|---|---|
| For ∅ [mm] | CG H14 | CP d12 | EK ∅ | FL | L | SR | XC | CRC[1] | Weight [g] | Part No. | Type |
| 32 | 14 | 34 | 10 | 22 | 13 | 11 | 142 | 2 | 190 | **32 968** | **SNG-32** |
| 40 | 16 | 40 | 12 | 25 | 16 | 13 | 160 | 2 | 270 | **32 969** | **SNG-40** |
| 50 | 21 | 45 | 16 | 27 | 16 | 15 | 170 | 2 | 445 | **32 970** | **SNG-50** |
| 63 | 21 | 51 | 16 | 32 | 21 | 18 | 190 | 2 | 675 | **32 971** | **SNG-63** |
| 80 | 25 | 65 | 20 | 36 | 22 | 20 | 210 | 2 | 1,265 | **32 972** | **SNG-80** |
| 100 | 25 | 75 | 20 | 41 | 27 | 22 | 230 | 2 | 1,790 | **32 973** | **SNG-100** |
| 125 | 37 | 97 | 30 | 50 | 30 | 26 | 275 | 2 | 4,000 | **32 974** | **SNG-125** |
| 160 | 43 | 122 | 35 | 55 | 35 | 32 | 315 | 2 | 6,558 | **152 597** | **SNG-160** |
| 200 | 43 | 122 | 35 | 60 | 35 | 32 | 335 | 2 | 9,678 | **152 598** | **SNG-200** |

1) Corrosion resistance class 2 according to Festo standard 940 070
Components requiring moderate corrosion resistance. Externally visible parts with primarily decorative surface requirements which are in direct contact with a surrounding industrial atmosphere or media such as cooling or lubricating agents

**Swivel flange SNGB**
for clevis foot LN/LSN

Material:
Die-cast aluminium
∅ 200: Steel

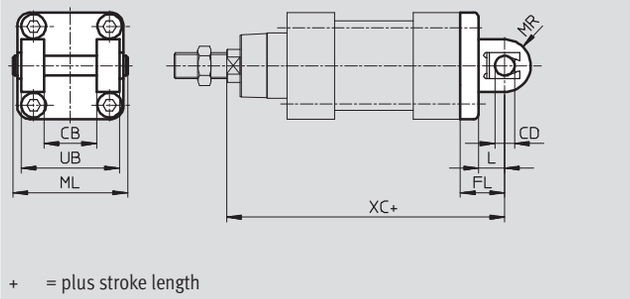


| Dimensions and ordering data | | | | | | | | | | | | |
|---|---|---|---|---|---|---|---|---|---|---|---|---|
| For ∅ [mm] | CB ∅ | CD ∅ | FL | L | ML | MR | UB h14 | XC | CRC[1] | Weight [g] | Part No. | Type |
| 32 | 26 | 10 | 22 | 13 | 55 | 10 | 45 | 142 | 2 | 125 | **34 540** | **SNGB-32** |
| 40 | 28 | 12 | 25 | 16 | 63 | 12 | 52 | 160 | 2 | 175 | **34 541** | **SNGB-40** |
| 50 | 32 | 12 | 27 | 16 | 71 | 12 | 60 | 170 | 2 | 243 | **34 542** | **SNGB-50** |
| 63 | 40 | 16 | 32 | 21 | 83 | 16 | 70 | 190 | 2 | 380 | **34 543** | **SNGB-63** |
| 80 | 50 | 16 | 36 | 22 | 103 | 16 | 90 | 210 | 2 | 610 | **34 544** | **SNGB-80** |
| 100 | 60 | 20 | 41 | 27 | 127 | 20 | 110 | 230 | 2 | 1,040 | **34 545** | **SNGB-100** |
| 125 | 70 | 25 | 50 | 30 | 148 | 25 | 130 | 275 | 2 | 1,750 | **34 546** | **SNGB-125** |
| 160 | 90 | 30 | 55 | 37 | 191 | 30 | 170 | 315 | 2 | 7,000 | **34 547** | **SNGB-160** |
| 200 | 90 | 30 | 60 | 35 | 191 | 36 | 170 | 335 | 2 | 11 000 | **562 455** | **SNGB-200-B** |
| 250 | 110 | 40 | 70 | 47 | 231 | 40 | 200 | 375 | 2 | 15 200 | **157 512** | **SNGB-250** |
| 320 | 120 | 45 | 80 | 52 | 253 | 45 | 220 | 420 | 2 | 26 450 | **157 513** | **SNGB-320** |

1) Corrosion resistance class 2 according to Festo standard 940 070
Components requiring moderate corrosion resistance. Externally visible parts with primarily decorative surface requirements which are in direct contact with a surrounding industrial atmosphere or media such as cooling or lubricating agents

**Swivel flange SSNG**
with spherical bearing
for clevis foot LBG

Material:
Nodular graphite cast iron

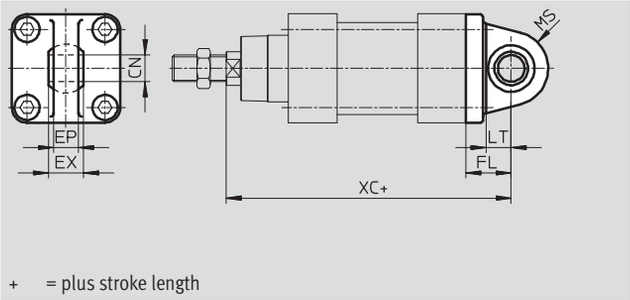


| Dimensions and ordering data | | | | | | | | | | | |
|---|---|---|---|---|---|---|---|---|---|---|---|
| For ∅ [mm] | CN ∅ | EP | EX | FL | LT | MS | XC | CRC[1] | Weight [g] | Part No. | Type |
| 32 | 10 | 10.5 | 14 | 22 | – | 16 | 142 | 2 | 195 | **34 291** | **SSNG-32** |
| 40 | 12 | 12 | 16 | 25 | – | 18 | 160 | 2 | 255 | **34 292** | **SSNG-40** |
| 50 | 16 | 15 | 21 | 27 | – | 21 | 170 | 2 | 430 | **34 293** | **SSNG-50** |
| 63 | 16 | 15 | 21 | 32 | 19 | 23 | 190 | 2 | 565 | **34 294** | **SSNG-63** |
| 80 | 20 | 18 | 25 | 36 | 21 | 27 | 210 | 2 | 940 | **34 295** | **SSNG-80** |
| 100 | 20 | 18 | 25 | 41 | 24 | 30 | 230 | 2 | 1,510 | **34 296** | **SSNG-100** |
| 125 | 30 | 25 | 37 | 50 | 28 | 40 | 275 | 2 | 3,082 | **34 568** | **SSNG-125** |

1) Corrosion resistance class 2 according to Festo standard 940 070
Components requiring moderate corrosion resistance. Externally visible parts with primarily decorative surface requirements which are in direct contact with a surrounding industrial atmosphere or media such as cooling or lubricating agents

**Swivel flange SNGL**

Material:
Die-cast aluminium

Variant CT:
Free of copper, PTFE and silicone

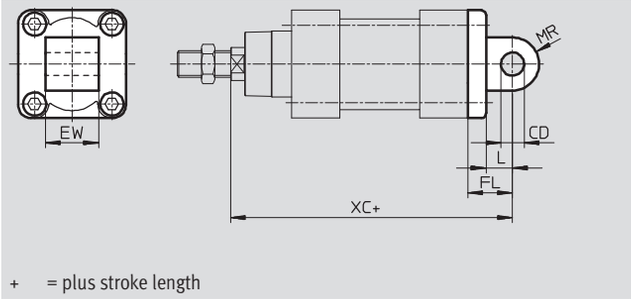


\+ = plus stroke length

| Dimensions and ordering data | | | | | | | | | | |
|---|---|---|---|---|---|---|---|---|---|---|
| For ∅ [mm] | CD ∅ | EW | FL | L | MR | XC | CRC[1] | Weight [g] | Part No. | Type |
| 32 | 10 | 26 | 22 | 13 | 10 | 142 | 2 | 75 | **151 527** | **SNGL-32** |
| 40 | 12 | 28 | 25 | 16 | 12 | 160 | 2 | 106 | **151 528** | **SNGL-40** |
| 50 | 12 | 32 | 27 | 16 | 12 | 170 | 2 | 183 | **151 529** | **SNGL-50** |
| 63 | 16 | 40 | 32 | 21 | 16 | 190 | 2 | 270 | **151 530** | **SNGL-63** |
| 80 | 16 | 50 | 36 | 22 | 16 | 210 | 2 | 503 | **151 531** | **SNGL-80** |
| 100 | 20 | 60 | 41 | 27 | 20 | 230 | 2 | 767 | **151 532** | **SNGL-100** |
| 125 | 25 | 70 | 50 | 30 | 25 | 275 | 2 | 1,433 | **151 533** | **SNGL-125** |
| 160 | 30 | 90 | 55 | 35 | 25 | 315 | 2 | 2,252 | **151 534** | **SNGL-160** |
| 200 | 30 | 90 | 60 | 35 | 25 | 335 | 2 | 3,306 | **151 535** | **SNGL-200** |

1) Corrosion resistance class 2 according to Festo standard 940 070
Components requiring moderate corrosion resistance. Externally visible parts with primarily decorative surface requirements which are in direct contact with a surrounding industrial atmosphere or media such as cooling or lubricating agents

**Ordering data – Mounting attachments**

Technical data ➔ Internet: clevis foot

| Designation | For ∅ | Part No. | Type |
|---|---|---|---|
| Clevis foot LSNG | | | |
| | 32 | **31 740** | **LSNG-32** |
| | 40 | **31 741** | **LSNG-40** |
| | 50 | **31 742** | **LSNG-50** |
| | 63 | **31 743** | **LSNG-63** |
| | 80 | **31 744** | **LSNG-80** |
| | 100 | **31 745** | **LSNG-100** |
| | 125 | **31 746** | **LSNG-125** |
| | 160 | **152 599** | **LSNG-160** |
| | 200 | **152 600** | **LSNG-200** |
| Clevis foot LBG | | | |
| 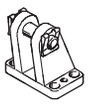 | 32 | **31 761** | **LBG-32** |
| | 40 | **31 762** | **LBG-40** |
| | 50 | **31 763** | **LBG-50** |
| | 63 | **31 764** | **LBG-63** |
| | 80 | **31 765** | **LBG-80** |
| | 100 | **31 766** | **LBG-100** |
| | 125 | **31 767** | **LBG-125** |
| | 160 | – | |
| | 200 | – | |
| Clevis foot LSN | | | |
| 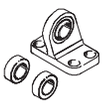 | 32 | **5 561** | **LSN-32** |
| | 40 | **5 562** | **LSN-40** |
| | 50 | **5 563** | **LSN-50** |
| | 63 | **5 564** | **LSN-63** |
| | 80 | **5 565** | **LSN-80** |
| | 100 | **5 566** | **LSN-100** |
| | 125 | **6 987** | **LSN-125** |
| | 160 | **6 988** | **LSN-160** |
| | 200 | **6 989** | **LSN-200** |
| | 250 | **6 990** | **LSN-250** |
| | 320 | **6 991** | **LSN-320** |

| Designation | For ∅ | Part No. | Type |
|---|---|---|---|
| Weld-on clevis foot LSNSG | | | |
| | 32 | **31 747** | **LSNSG-32** |
| | 40 | **31 748** | **LSNSG-40** |
| | 50 | **31 749** | **LSNSG-50** |
| | 63 | **31 750** | **LSNSG-63** |
| | 80 | **31 751** | **LSNSG-80** |
| | 100 | **31 752** | **LSNSG-100** |
| | 125 | **31 753** | **LSNSG-125** |
| | 160 | – | |
| | 200 | – | |
| Clevis foot LNG | | | |
| | 32 | **33 890** | **LNG-32** |
| | 40 | **33 891** | **LNG-40** |
| | 50 | **33 892** | **LNG-50** |
| | 63 | **33 893** | **LNG-63** |
| | 80 | **33 894** | **LNG-80** |
| | 100 | **33 895** | **LNG-100** |
| | 125 | **33 896** | **LNG-125** |
| | 160 | – | |
| | 200 | **33 898** | **LNG-200** |
| Clevis foot, right-angled LQG | | | |
| | 32 | **31 768** | **LQG-32** |
| | 40 | **31 769** | **LQG-40** |
| | 50 | **31 770** | **LQG-50** |
| | 63 | **31 771** | **LQG-63** |
| | 80 | **31 772** | **LQG-80** |
| | 100 | **31 773** | **LQG-100** |
| | 125 | **31 774** | **LQG-125** |
| | 160 | – | |
| | 200 | – | |
| | 250 | – | |
| | 320 | – | |

**Ordering data – One-way flow control valves**

Technical data ➔ Internet: grla

| | Connection | | Material | Part No. | Type |
|---|---|---|---|---|---|
| | Thread | For tubing OD | | | |
| | G⅛ | 3 | Metal design | **193 142** | **GRLA-⅛-QS-3-D** |
| | | 4 | | **193 143** | **GRLA-⅛-QS-4-D** |
| | | 6 | | **193 144** | **GRLA-⅛-QS-6-D** |
| | | 8 | | **193 145** | **GRLA-⅛-QS-8-D** |
| | G¼ | 6 | | **193 146** | **GRLA-¼-QS-6-D** |
| | | 8 | | **193 147** | **GRLA-¼-QS-8-D** |
| | | 10 | | **193 148** | **GRLA-¼-QS-10-D** |
| | G⅜ | 6 | | **193 149** | **GRLA-⅜-QS-6-D** |
| | | 8 | | **193 150** | **GRLA-⅜-QS-8-D** |
| | | 10 | | **193 151** | **GRLA-⅜-QS-10-D** |
| | G½ | 12 | | **193 152** | **GRLA-½-QS-12-D** |

**Ordering data – Piston rod attachments**

Technical data ➔ Internet: piston-rod attachment

| Designation | For ∅ | Part No. | Type |
|---|---|---|---|
| **Rod eye SGS** | | | |
| | 32 | **9 261** | **SGS-M10x1,25** |
| | 40 | **9 262** | **SGS-M12x1,25** |
| | 50 | **9 263** | **SGS-M16x1,5** |
| | 63 | | |
| | 80 | **9 264** | **SGS-M20x1,5** |
| | 100 | | |
| | 125 | **10 774** | **SGS-M27x2** |
| | 160 | **10 775** | **SGS-M36x2** |
| | 200 | | |
| | 250 | **10 776** | **SGS-M42x2** |
| | 320 | **10 777** | **SGS-M48x2** |
| **Rod clevis SG** | | | |
| 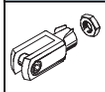 | 32 | **6 144** | **SG-M10x1,25** |
| | 40 | **6 145** | **SG-M12x1,25** |
| | 50 | **6 146** | **SG-M16x1,5** |
| | 63 | | |
| | 80 | **6 147** | **SG-M20x1,5** |
| | 100 | | |
| | 125 | **14 987** | **SG-M27x2-B** |
| | 160 | **9 581** | **SG-M36x2** |
| | 200 | | |
| | 250 | **9 582** | **SG-M42x2** |
| | 320 | **9 583** | **SG-M48x2** |
| **Coupling piece KSG** | | | |
| 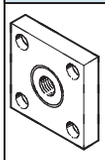 | 32 | **32 963** | **KSG-M10x1,25** |
| | 40 | **32 964** | **KSG-M12x1,25** |
| | 50 | **32 965** | **KSG-M16x1,5** |
| | 63 | | |
| | 80 | **32 966** | **KSG-M20x1,5** |
| | 100 | | |
| | 125 | **32 967** | **KSG-M27x2** |
| **Adapter AD** | | | |
| 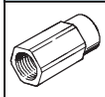 | 32 | **157 333** | **AD-M10x1,25-⅛** |
| | | **157 334** | **AD-M10x1,25-¼** |
| | 40 | **160 256** | **AD-M12x1,25-¼** |
| | | **160 257** | **AD-M12x1,25-⅜** |

| Designation | For ∅ | Part No. | Type |
|---|---|---|---|
| **Rod clevis SGA** | | | |
| | 32 | **32 954** | **SGA-M10x1,25** |
| | 40 | **10 767** | **SGA-M12x1,25** |
| | 50 | **10 768** | **SGA-M16x1,5** |
| | 63 | | |
| | 80 | **10 769** | **SGA-M20x1,5** |
| | 100 | | |
| | 125 | **10 770** | **SGA-M27x2** |
| | 160 | **10 775** | **SGA-M36x2** |
| | 200 | | |
| | – | – | |
| | – | – | |
| **Self-aligning rod coupler FK** | | | |
| 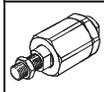 | 32 | **6 140** | **FK-M10x1,25** |
| | 40 | **6 141** | **FK-M12x1,25** |
| | 50 | **6 142** | **FK-M16x1,5** |
| | 63 | | |
| | 80 | **6 143** | **FK-M20x1,5** |
| | 100 | | |
| | 125 | **10 485** | **FK-M27x2** |
| | 160 | **10 746** | **FK-M36x2** |
| | 200 | | |
| | 250 | – | |
| | 320 | – | |
| **Coupling piece KSZ** | | | |
| 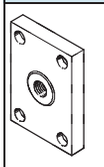 | 32 | **36 125** | **KSZ-M10x1,25** |
| | 40 | **36 126** | **KSZ-M12x1,25** |
| | 50 | **36 127** | **KSZ-M16x1,5** |
| | 63 | | |
| | 80 | **36 128** | **KSZ-M20x1,5** |
| | 100 | | |
| | 125 | – | – |

**Ordering data – Guide units for fixed strokes (recirculating ball bearing guide only)** Technical data ➔ Internet: feng

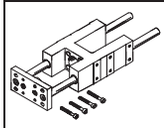

| Stroke [mm] | Part No. | Type | Stroke [mm] | Part No. | Type |
|---|---|---|---|---|---|
| For ∅ 32 mm | | | For ∅ 40 mm | | |
| 10 … 50 | **34 493** | **FENG-32-50-KF** | 10 … 50 | **34 499** | **FENG-40-50-KF** |
| 10 … 100 | **34 494** | **FENG-32-100-KF** | 10 … 100 | **34 500** | **FENG-40-100-KF** |
| 10 … 160 | **34 495** | **FENG-32-160-KF** | 10 … 160 | **34 501** | **FENG-40-160-KF** |
| 10 … 200 | **34 496** | **FENG-32-200-KF** | 10 … 200 | **34 502** | **FENG-40-200-KF** |
| 10 … 250 | **150 289** | **FENG-32-250-KF** | 10 … 250 | **34 503** | **FENG-40-250-KF** |
| 10 … 320 | **34 497** | **FENG-32-320-KF** | 10 … 320 | **34 504** | **FENG-40-320-KF** |
| 10 … 400 | **150 290** | **FENG-32-400-KF** | 10 … 400 | **150 291** | **FENG-40-400-KF** |
| 10 … 500 | **34 498** | **FENG-32-500-KF** | 10 … 500 | **34 505** | **FENG-40-500-KF** |
| For ∅ 50 mm | | | For ∅ 63 mm | | |
| 10 … 50 | **34 506** | **FENG-50-50-KF** | 10 … 50 | **34 513** | **FENG-63-50-KF** |
| 10 … 100 | **34 507** | **FENG-50-100-KF** | 10 … 100 | **34 514** | **FENG-63-100-KF** |
| 10 … 160 | **34 508** | **FENG-50-160-KF** | 10 … 160 | **34 515** | **FENG-63-160-KF** |
| 10 … 200 | **34 509** | **FENG-50-200-KF** | 10 … 200 | **34 516** | **FENG-63-200-KF** |
| 10 … 250 | **34 510** | **FENG-50-250-KF** | 10 … 250 | **34 517** | **FENG-63-250-KF** |
| 10 … 320 | **34 511** | **FENG-50-320-KF** | 10 … 320 | **34 518** | **FENG-63-320-KF** |
| 10 … 400 | **150 292** | **FENG-50-400-KF** | 10 … 400 | **34 519** | **FENG-63-400-KF** |
| 10 … 500 | **34 512** | **FENG-50-500-KF** | 10 … 500 | **34 520** | **FENG-63-500-KF** |
| For ∅ 80 mm | | | For ∅ 100 mm | | |
| 10 … 50 | **34 521** | **FENG-80-50-KF** | 10 … 50 | **34 529** | **FENG-100-50-KF** |
| 10 … 100 | **34 522** | **FENG-80-100-KF** | 10 … 100 | **34 530** | **FENG-100-100-KF** |
| 10 … 160 | **34 523** | **FENG-80-160-KF** | 10 … 160 | **34 531** | **FENG-100-160-KF** |
| 10 … 200 | **34 524** | **FENG-80-200-KF** | 10 … 200 | **34 532** | **FENG-100-200-KF** |
| 10 … 250 | **34 525** | **FENG-80-250-KF** | 10 … 250 | **34 533** | **FENG-100-250-KF** |
| 10 … 320 | **34 526** | **FENG-80-320-KF** | 10 … 320 | **34 534** | **FENG-100-320-KF** |
| 10 … 400 | **34 527** | **FENG-80-400-KF** | 10 … 400 | **34 535** | **FENG-100-400-KF** |
| 10 … 500 | **34 528** | **FENG-80-500-KF** | 10 … 500 | **34 536** | **FENG-100-500-KF** |

**Ordering data – Guide units for variable strokes** Technical data ➔ Internet: feng

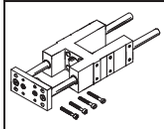

| For ∅ [mm] | Stroke [mm] | With recirculating ball bearing guide Part No. | Type | With sliding bearing guide Part No. | Type |
|---|---|---|---|---|---|
| 32 | 10 … 500 | **34 487** | **FENG-32-…-KF** | **34 481** | **FENG-32-…** |
| 40 | 10 … 500 | **34 488** | **FENG-40-…-KF** | **34 482** | **FENG-40-…** |
| 50 | 10 … 500 | **34 489** | **FENG-50-…-KF** | **34 483** | **FENG-50-…** |
| 63 | 10 … 500 | **34 490** | **FENG-63-…-KF** | **34 484** | **FENG-63-…** |
| 80 | 10 … 500 | **34 491** | **FENG-80-…-KF** | **34 485** | **FENG-80-…** |
| 100 | 10 … 500 | **34 492** | **FENG-100-…-KF** | **34 486** | **FENG-100-…** |

| Ordering data – Connecting cables | | | | | Technical data ➔ Internet: nebu |
|---|---|---|---|---|---|
| | Electrical connection, left | Electrical connection, right | Cable length [m] | Part No. | Type |
| | Straight socket, M8x1, 3-pin | Cable, open end, 3-wire | 2.5 | **541 333** | **NEBU-M8G3-K-2.5-LE3** |
| | | | 5 | **541 334** | **NEBU-M8G3-K-5-LE3** |
| | Angled socket, M8x1, 3-pin | Cable, open end, 3-wire | 2.5 | **541 338** | **NEBU-M8W3-K-2.5-LE3** |
| | | | 5 | **541 341** | **NEBU-M8W3-K-5-LE3** |

| Ordering data – Proximity sensors for T-slot, magneto-resistive | | | | | | Technical data ➔ Internet: smt |
|---|---|---|---|---|---|---|
| | Type of mounting | Switch output | Electrical connection | Cable length [m] | Part No. | Type |
| N/O contact | | | | | | |
| 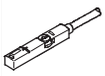 | Insertable in the slot from above, flush with cylinder profile | PNP | Cable, 3-wire | 2.5 | **543 867** | **SMT-8M-PS-24V-K-2,5-OE** |
| | | | Plug M8x1, 3-pin | 0.3 | **543 866** | **SMT-8M-PS-24V-K-0,3-M8D** |
| | | | Plug M12x1, 3-pin | 0.3 | **543 869** | **SMT-8M-PS-24V-K-0,3-M12** |
| | | NPN | Cable, 3-wire | 2.5 | **543 870** | **SMT-8M-NS-24V-K-2,5-OE** |
| | | | Plug M8x1, 3-pin | 0.3 | **543 871** | **SMT-8M-NS-24V-K-0,3-M8D** |
| | Insertable in the slot lengthwise, flush with the cylinder profile | PNP | Cable, 3-wire | 2.5 | **175 436** | **SMT-8-PS-K-LED-24-B** |
| | | | Plug M8x1, 3-pin | 0.3 | **175 484** | **SMT-8-PS-S-LED-24-B** |
| N/C contact | | | | | | |
| 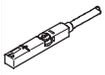 | Insertable in the slot from above, flush with cylinder profile | PNP | Cable, 3-wire | 7.5 | **543 873** | **SMT-8M-PO-24V-K7,5-OE** |

| Ordering data – Proximity sensors for T-slot, magnetic reed | | | | | | Technical data ➔ Internet: sme |
|---|---|---|---|---|---|---|
| | Type of mounting | Switch output | Electrical connection | Cable length [m] | Part No. | Type |
| N/O contact | | | | | | |
| 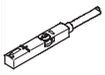 | Insertable in the slot from above, flush with cylinder profile | Contacting | Cable, 3-wire | 2.5 | **543 862** | **SME-8M-DS-24V-K-2,5-OE** |
| | | | | 5.0 | **543 863** | **SME-8M-DS-24V-K-5,0-OE** |
| | | | Cable, 3-wire | 2.5 | **543 872** | **SME-8M-ZS-24V-K-2,5-OE** |
| | | | Plug M8x1, 3-pin | 0.3 | **543 861** | **SME-8M-DS-24V-K-0,3-M8D** |
| | Insertable in the slot lengthwise, flush with the cylinder profile | Contacting | Cable, 3-wire | 2.5 | **150 855** | **SME-8-K-LED-24** |
| | | | Plug M8x1, 3-pin | 0.3 | **150 857** | **SME-8-S-LED-24** |
| N/C contact | | | | | | |
| | Insertable in the slot lengthwise, flush with the cylinder profile | Contacting | Cable, 3-wire | 7.5 | **160 251** | **SME-8-O-K-LED-24** |

| Ordering data – Mounting kits for proximity sensors SME/SMT-8 | | | | Technical data ➔ Internet: smbz |
|---|---|---|---|---|
| | For ∅ | Materials | Part No. | Type |
| 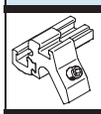 | 32 ... 100 mm | Rail: Wrought aluminium alloy, anodised<br>Screws: High-alloy steel<br>Free of copper and PTFE | **537 806** | **SMBZ-8-32/100** |
| | 125 ... 320 mm | | **537 808** | **SMBZ-8-125/320** |

**Ordering data – Rectangular proximity sensors, magneto-resistive** — Technical data ➔ Internet: smto

| | Mounting | Switch output | Electrical connection: Cables | Electrical connection: M8 plug | Cable length [m] | Part No. | Type |
|---|---|---|---|---|---|---|---|
| NO contact | | | | | | | |
| 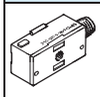 | Via accessories | PNP | 3-wire | – | 2.5 | **151 683** | **SMTO-1-PS-K-LED-24-C** |
| | | | – | 3-pin | – | **151 685** | **SMTO-1-PS-S-LED-24-C** |
| | | NPN | 3-wire | – | 2.5 | **151 684** | **SMTO-1-NS-K-LED-24-C** |
| | | | – | 3-pin | – | **151 686** | **SMTO-1-NS-S-LED-24-C** |

**Ordering data – Rectangular proximity sensors, magnetic reed** — Technical data ➔ Internet: smeo

| | Mounting | Electrical connection: Cables | Electrical connection: M8 plug | Cable length [m] | Part No. | Type |
|---|---|---|---|---|---|---|
| NO contact | | | | | | |
| 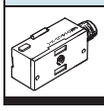 | Via accessories | 3-wire | – | 2.5 | **30 459** | **SMEO-1-LED-24-B** |
| | | 3-wire | – | 5.0 | **151 672** | **SMEO-1-LED-24-K5-B** |
| | | – | 3-pin | – | **150 848** | **SMEO-1-S-LED-24-B** |

**Ordering data – Mounting kits for proximity sensors SMEO/SMTO-1** — Technical data ➔ Internet: smb

| | For ∅ | Mounting | Part No. | Type |
|---|---|---|---|---|
| 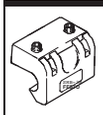 | 32 … 50 mm | Directly on the mounting or tie rod | **36 162** | **SMB-2-B** |
| | 125 … 320 mm | | **11 886** | **SMB-1** |
| | 63 … 100 mm | | **36 163** | **SMB-3-B** |

**Ordering data – Rectangular proximity sensors, pneumatic** — Technical data ➔ Internet: smpo

| | Mounting | Pneumatic connection | Part No. | Type |
|---|---|---|---|---|
| 3/2-way valve, normally closed | | | | |
| 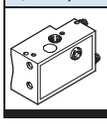 | Via accessories | Barbed fitting for tubing ID of 3 mm | **31 008** | **SMPO-1-H-B** |

**Ordering data – Mounting kits for proximity sensors SMPO-1** — Technical data ➔ Internet: smbs

| | For ∅ | Mounting | Part No. | Type |
|---|---|---|---|---|
| 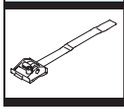 | 32 … 100 mm | On the cylinder barrel via clamping strap | **151 226** | **SMBS-2** |

**Ordering data – Mounting kits for proximity sensors SME/SMT-8** — Technical data ➔ Internet: smbr

| | For ∅ | Mounting | CRC[1)] | Part No. | Type |
|---|---|---|---|---|---|
| 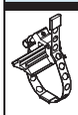 | 32 … 100 mm | On the cylinder barrel via clamping strap | 4 | **538 937** | **SMBR-8-8/100-S6** |

1) Corrosion resistance class 4 according to Festo standard 940 070
Components requiring higher corrosion resistance. Parts used with aggressive media, e.g. food or chemical industry. These applications should be supported with special tests with the media if required