In this document, you will find drawings that show the mounting hole layout of the 2 to 5 modules LFR-... D series combinations alongside the mounting hole layout of the substitutional* MS series combinations.

A table below indicates which mounting hole layout corresponds to each product type.

Use a minimum of Class 8.8 bolts for both mounting the adapter plates on the intended use up location and for mounting the MS series combinations on the adapter plate(s).

* Substitution materials for D-MINI, D-MIDI and D-MAXI combinations can be found in the online catalogue at *https://www.festo.com/de/en/c/products/compressed-air-preparation-id_pim31/.* Note: The drawings are valid ONLY for D series combinations assembled with HFOE-D and MS series assembled with WP type mounting brackets!

** In some cases, D-MAXI combinations can be substituted by MS9 combinations. For further details, see the online catalogue at *https://www.festo.com/de/en/c/products/compressed-air-preparation-id_pim31/*.

		Mounting hole layout for							
Type	Substituted by	2 module combination		3 module combination		4 module combination		5 module combination	
D-MINI	MS4	E08340392	Sheet 2	E08340429	Sheet 3	E08340394	Sheet 4	E08340396	Sheet 5
D-MIDI	MS6	E08340397	Sheet 6	E08340403	Sheet 7	E08340360	Sheet 8	E08340399	Sheet 9
D-MAXI	MS6**	E08340404	Sheet 10	E08340405	Sheet 11	E08340407	Sheet 12	E08340401	Sheet 13

© Copyright by Festo SE & Co. KG
All rights reserved. Referred to protection notice ISO 16016.

Rev. -	ECN 290881	Qty.			
Project-No.	Language EN / DE	Type D-MS ADAPTER PLATES			
	Date	Name	Material	FESTO	
Created	14-03-2025			Sheet 1/13	Unit mm
Checked	31-12-2099				
Released	31-12-2099		Made of		
Scale 1:1	Description Adapter plate ADAPTERPLATTE		Doc-Type DRW	Material-No. see table	Document-No. E08343794

DIN A3

Creo - drawing

(example combination)
SCALE 1:2

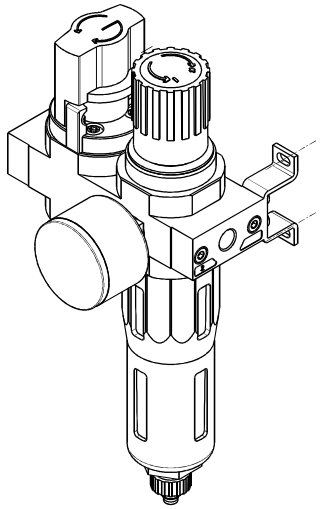

D-MINI → MS4

2 module combinations

(example combination)
SCALE 1:2

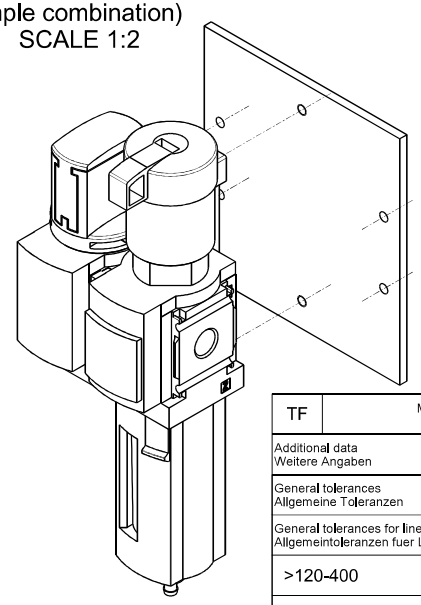

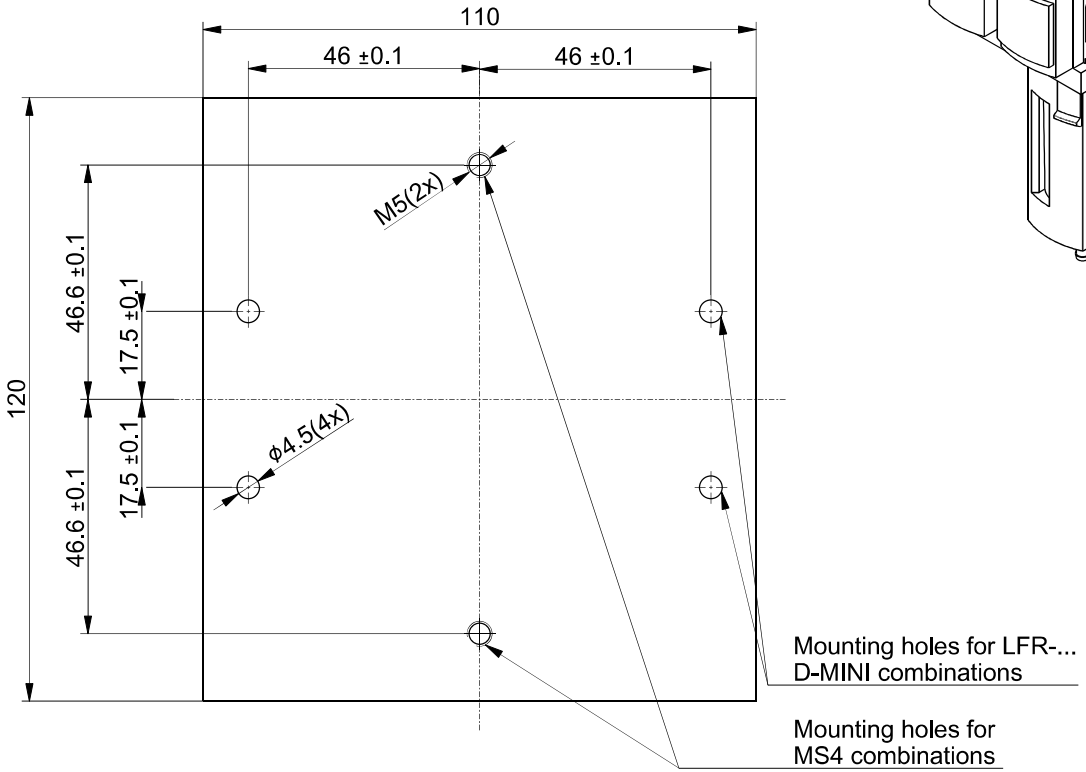

TF	Machining Spanen	
Additional data Weitere Angaben	FN 940053-1 FN 940053-17	
General tolerances Allgemeine Toleranzen	ISO 2768-mK:1989	
General tolerances for linear dimensions Allgemeintoleranzen fuer Laengenmasse		
>120-400	±0.5	
>30-120	±0.3	
>6-30	±0.2	
≥0.5-6	±0.1	
Drawing standard Zeichnungsnorm	ISO	FN 940051
Tolerancing Tolerierung	DIN 7167	
Measuring strategy Messstrategie	FN 940114	
Surface texture Oberflaechenbeschaffenheit	FN940011-3	
Theor. mass for info only Theor. Masse nur zur Info	Not relevant Nicht relevant	
Total area Gesamtflaeche	Not relevant Nicht relevant	
Corrosion resistance class Korrosionsbestaendigkeitsklasse		
FN 940070	Not relevant Nicht relevant	
Coating Ueberzug		
No coating Kein Ueberzug		
LABS (PWIS) conformity LABS Konformitaet	-	

Recommended adapter plate
thickness: 10mm

© Copyright by Festo SE & Co. KG
All rights reserved. Referred to protection notice ISO 16016.

Rev. -	ECN 290881			Qty.
Project-No.	Language EN / DE	Type D-MS ADAPTER PLATES		
	Date	Name	Material	
Created	14-03-2025			
Checked	31-12-2099			
Released	31-12-2099		Made of	
Scale 1:1	Description Adapter plate ADAPTERPLATTE		Doc-Type DRW	Material-No. see table
				Document-No. E08343794
Sheet 2/13	Unit mm			

FESTO

DIN A3

Creo - drawing

(example combination)
SCALE 1:2

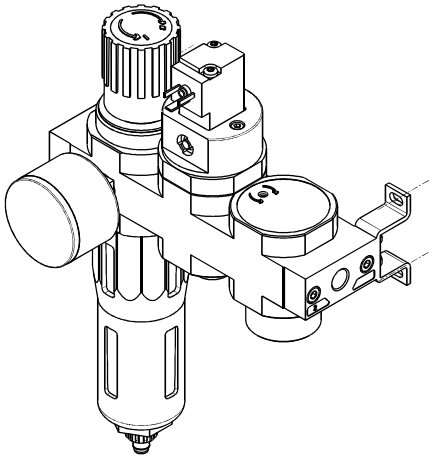

D-MINI → MS4

3 module combinations

(example combination)
SCALE 1:2

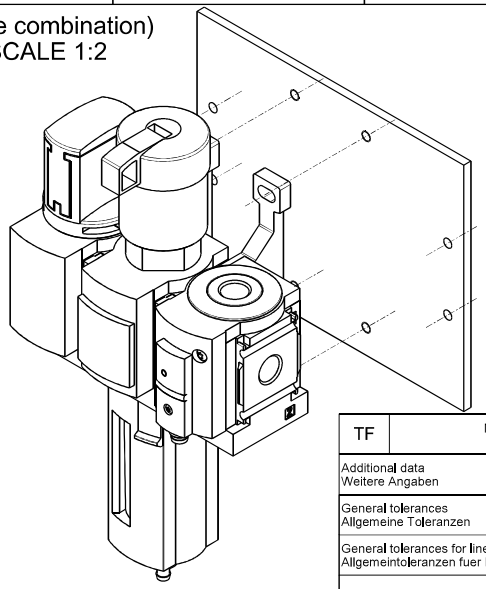

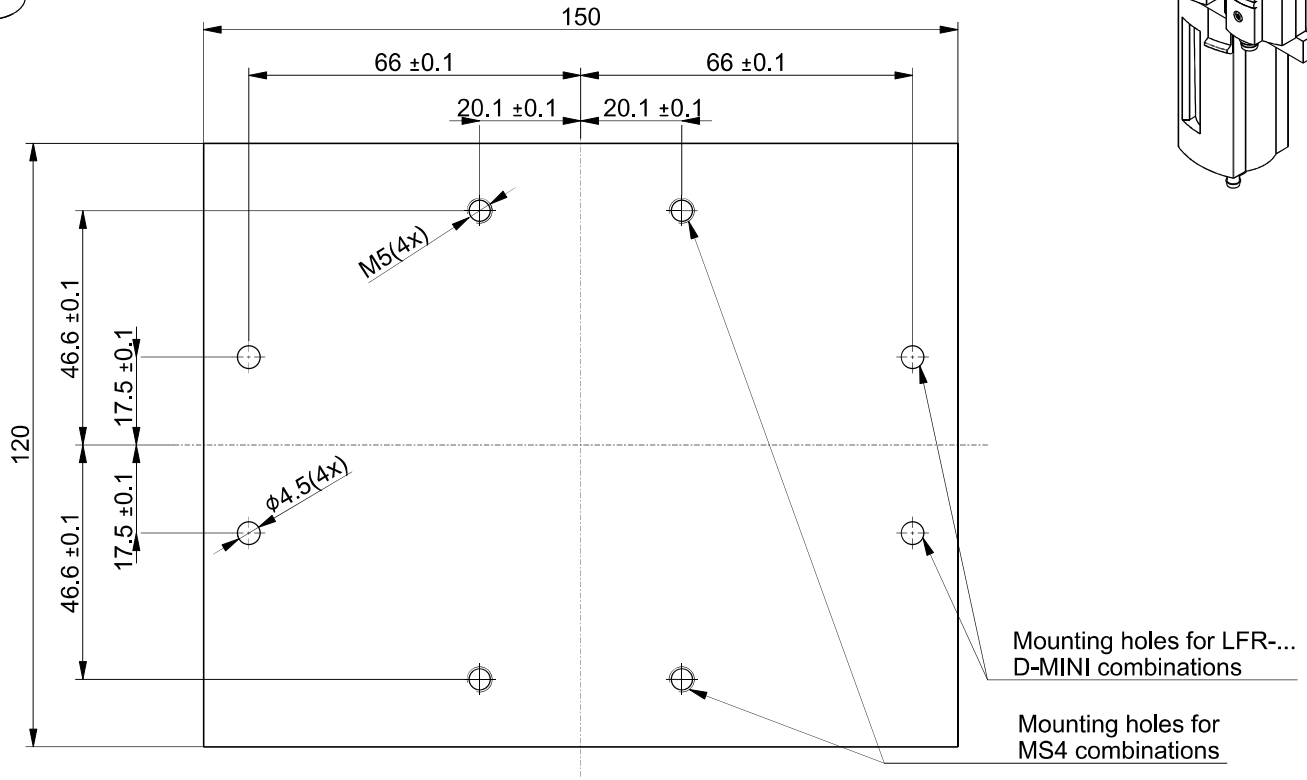

TF	Machining Spanen	
Additional data Weitere Angaben	FN 940053-1 FN 940053-17	
General tolerances Allgemeine Toleranzen	ISO 2768-mK:1989	
General tolerances for linear dimensions Allgemeintoleranzen fuer Laengenmasse		
>120-400	±0.5	
>30-120	±0.3	
>6-30	±0.2	
≥0.5-6	±0.1	
Drawing standard Zeichnungsnorm	ISO	FN 940051
Tolerancing Tolerierung	DIN 7167	
Measuring strategy Messstrategie	FN 940114	
Surface texture Oberflaechenbeschaffenheit	FN940011-3	
Theor. mass for info only Theor. Masse nur zur Info	Not relevant Nicht relevant	
Total area Gesamtflaeche	Not relevant Nicht relevant	
Corrosion resistance class Korrosionsbestaendigkeitsklasse		
FN 940070	Not relevant Nicht relevant	
Coating Ueberzug		
No coating Kein Ueberzug		
LABS (PWIS) conformity LABS Konformitaet	-	

Recommended adapter plate
thickness: 10mm

© Copyright by Festo SE & Co. KG
All rights reserved. Referred to protection notice ISO 16016.

Rev. -	ECN 290881			Qty.
Project-No.	Language EN / DE	Type D-MS ADAPTER PLATES		
	Date	Name	Material	
Created	14-03-2025			
Checked	31-12-2099			
Released	31-12-2099		Made of	
Scale 1:1	Description Adapter plate ADAPTERPLATTE		Doc-Type DRW	Material-No. see table
				Document-No. E08343794

FESTO

Sheet 3/13 | Unit mm

DIN A3

Creo - drawing

(example combination)
SCALE 1:2

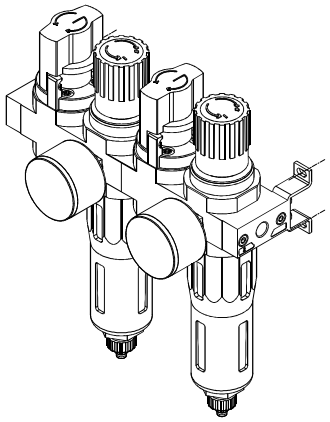

D-MINI → MS4

4 module combinations

(example combination)
SCALE 1:2

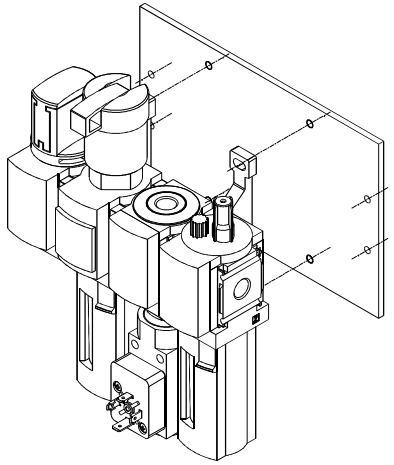

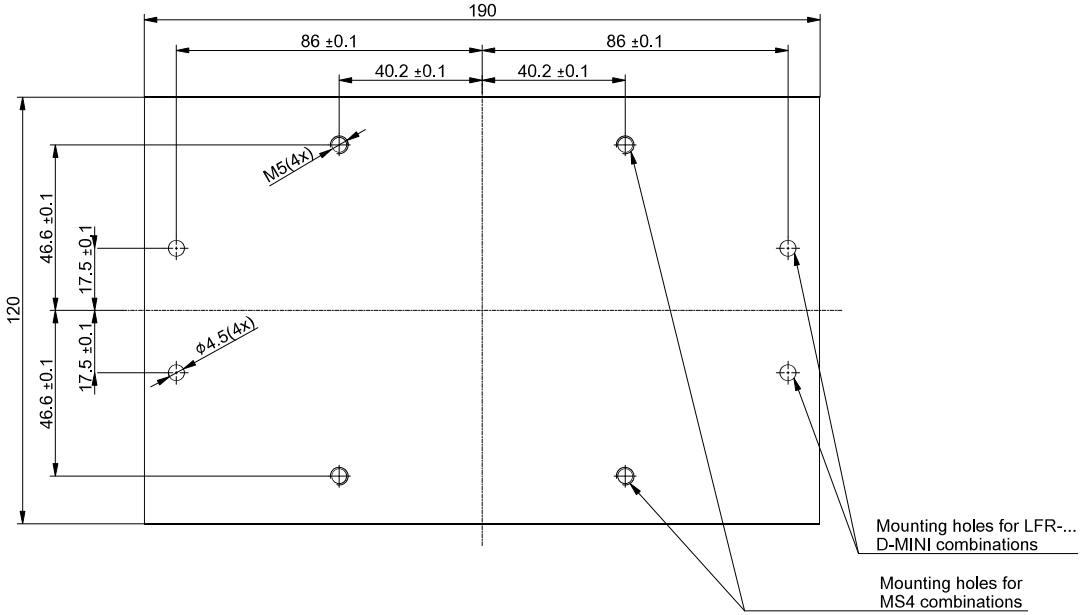

TF	Machining Spanen	
Additional data Weitere Angaben	FN 940053-1 FN 940053-17	
General tolerances Allgemeine Toleranzen	ISO 2768-mK:1989	
General tolerances for linear dimensions Allgemeintoleranzen fuer Laengenmasse		
>120-400	±0.5	
>30-120	±0.3	
>6-30	±0.2	
≥0.5-6	±0.1	
Drawing standard Zeichnungsnorm	ISO	FN 940051
Tolerancing Tolerierung	DIN 7167	
Measuring strategy Messstrategie	FN 940114	
Surface texture Oberflaechenbeschaffenheit	FN940011-3	
Theor. mass for info only Theor. Masse nur zur Info	Not relevant Nicht relevant	
Total area Gesamtflaeche	Not relevant Nicht relevant	
Corrosion resistance class Korrosionsbestaendigkeitsklasse		
FN 940070	Not relevant Nicht relevant	
Coating Ueberzug		
No coating Kein Ueberzug		
LABS (PWIS) conformity LABS Konformitaet	-	

Recommended adapter plate
thickness: 10mm

© Copyright by Festo SE & Co. KG
All rights reserved. Referred to protection notice ISO 16016.

Rev. -	ECN 290881			Qty.
Project-No.	Language EN / DE	Type D-MS ADAPTER PLATES		
	Date	Name	Material	
Created	14-03-2025			
Checked	31-12-2099			
Released	31-12-2099		Made of	
Scale 1:1	Description Adapter plate ADAPTERPLATTE		Doc-Type DRW	Material-No. see table
				Document-No. E08343794

FESTO

Sheet 4/13 | Unit mm

DIN A2

Creo - drawing

(example combination)
SCALE 1:2

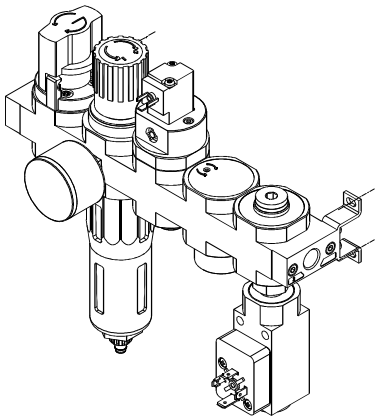

D-MINI → MS4

5 module combinations

(example combination)
SCALE 1:2

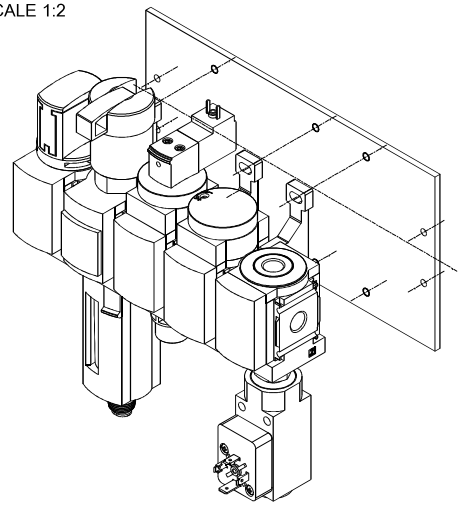

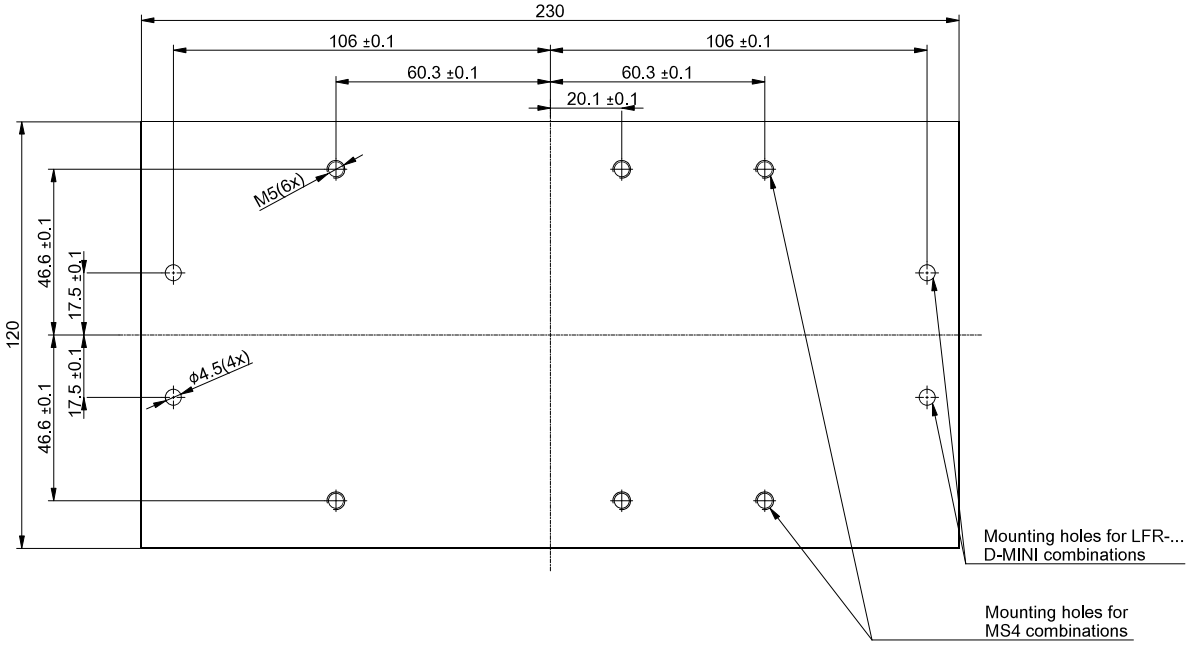

TF	Machining Spanen
Additional data Weitere Angaben	FN 940053-1 FN 940053-17
General tolerances Allgemeine Toleranzen	ISO 2768-mK:1989
General tolerances for linear dimensions Allgemeintoleranzen fuer Laengenmasse	
>120-400	±0.5
>30-120	±0.3
>6-30	±0.2
≥0.5-6	±0.1
Drawing standard Zeichnungsnorm	ISO FN 940051
Tolerancing Tolerierung	DIN 7167
Measuring strategy Messstrategie	FN 940114
Surface texture Oberflaechenbeschaffenheit	FN940011-3
Theor. mass for info only Theor. Masse nur zur Info	Not relevant Nicht relevant
Total area Gesamtflaeche	Not relevant Nicht relevant
Corrosion resistance class Korrosionsbestaendigkeitsklasse	
FN 940070	Not relevant Nicht relevant
Coating Ueberzug	
No coating Kein Ueberzug	
LABS (PWIS) conformity LABS Konformitaet	-

Recommended adapter plate
thickness: 10mm

© Copyright by Festo SE & Co. KG
All rights reserved. Referred to protection notice ISO 16016.

Rev. -	ECN 290881	Qty.	
Project-No.	Language EN / DE	Type D-MS ADAPTER PLATES	
	Date	Name	Material
Created	14-03-2025		
Checked	31-12-2099		
Released	31-12-2099		Made of
Scale 1:1	Description Adapter plate ADAPTERPLATTE	Doc-Type DRW	Material-No. see table
			Document-No. E08343794
Sheet 5/13	Unit mm		

FESTO

DIN A2

Creo - drawing

(example combination)
SCALE 1:2

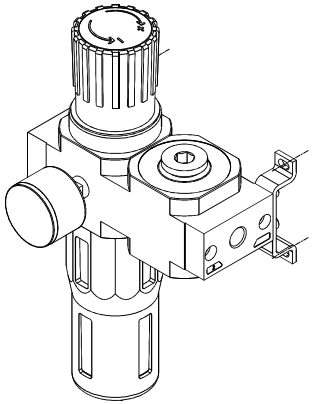

D-MIDI → MS6

2 module combinations

(example combination)
SCALE 1:2

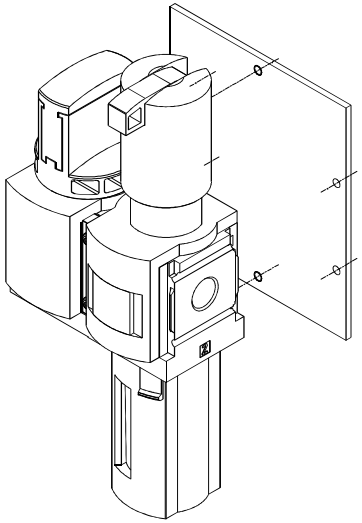

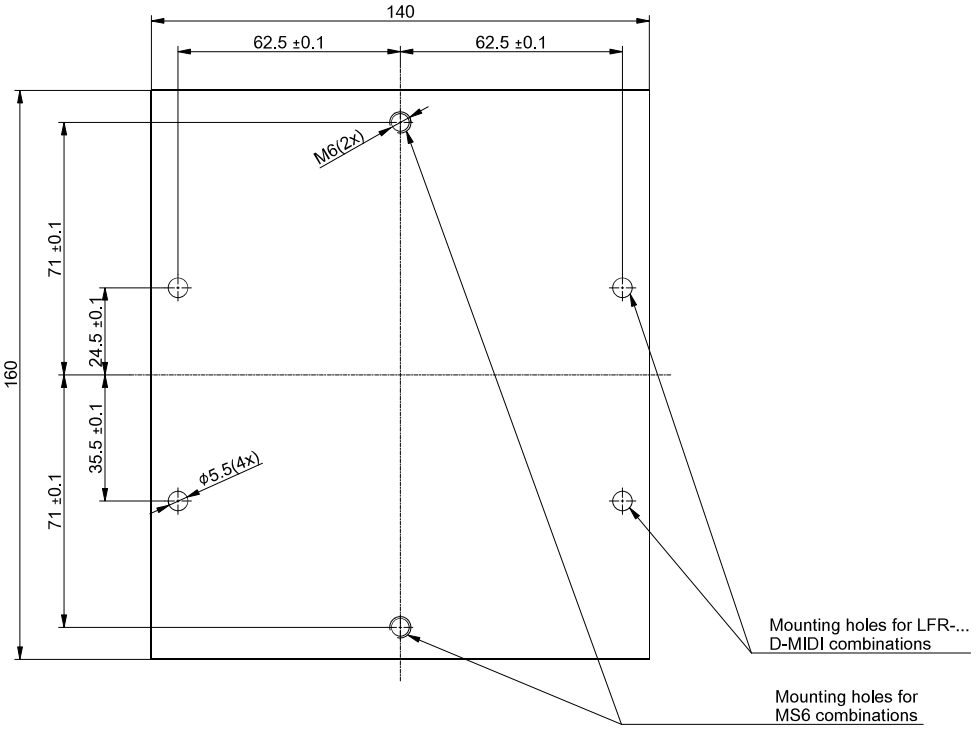

Recommended adapter plate
thickness: 10mm

TF	Machining Spanen		
Additional data Weitere Angaben	FN 940053-1 FN 940053-17		
General tolerances Allgemeine Toleranzen	ISO 2768-mK:1989		
General tolerances for linear dimensions Allgemeintoleranzen fuer Laengenmasse			
>120-400	±0.5		
>30-120	±0.3		
>6-30	±0.2		
≥0.5-6	±0.1		
Drawing standard Zeichnungsnorm	ISO	FN 940051	
Tolerancing Tolerierung	DIN 7167		
Measuring strategy Messstrategie	FN 940114		
Surface texture Oberflaechenbeschaffenheit	FN940011-3		
Theor. mass for info only Theor. Masse nur zur Info	Not relevant Nicht relevant		
Total area Gesamtflaeche	Not relevant Nicht relevant		
Corrosion resistance class Korrosionsbestaendigkeitsklasse			
FN 940070	Not relevant Nicht relevant		
Coating Ueberzug			
No coating Kein Ueberzug			
LABS (PWIS) conformity LABS Konformitaet	-		

© Copyright by Festo SE & Co. KG
All rights reserved. Referred to protection notice ISO 16016.

Rev. -	ECN 290881	Qty.	
Project-No.	Language EN / DE	Type D-MS ADAPTER PLATES	
	Date	Name	Material
Created	14-03-2025		
Checked	31-12-2099		
Released	31-12-2099		Made of
Scale 1:1	Description Adapter plate ADAPTERPLATTE	Doc-Type DRW	Material-No. see table
			Document-No. E08343794

FESTO

Sheet 6/13 | Unit mm

DIN A2

Creo - drawing

(example combination)
SCALE 1:2

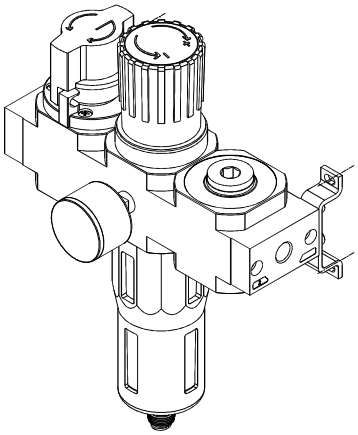

D-MIDI → MS6

3 module combinations

(example combination)
SCALE 1:2

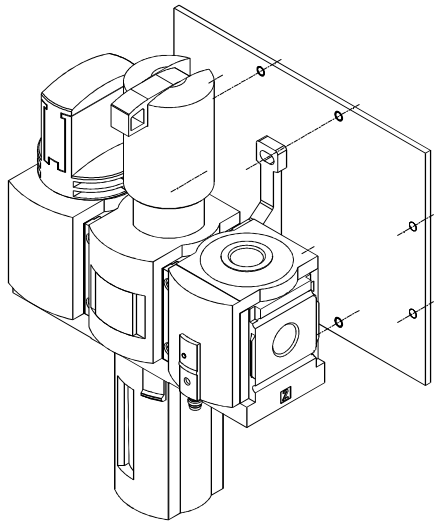

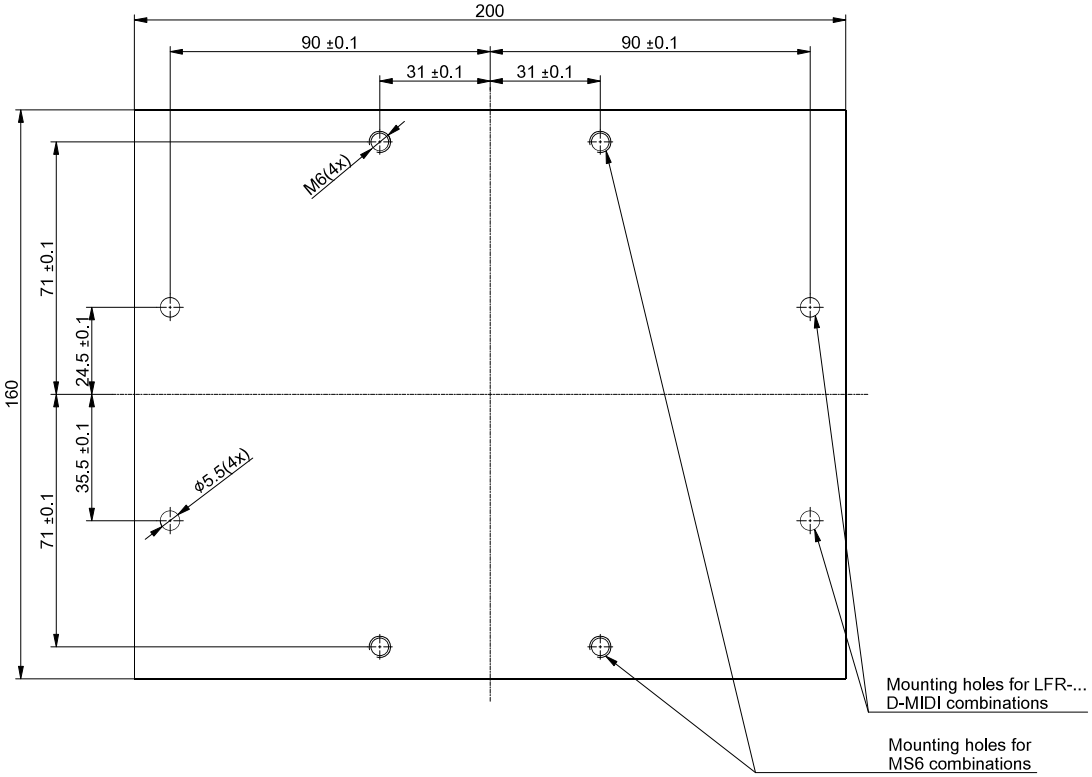

TF	Machining Spanen	
Additional data Weitere Angaben	FN 940053-1 FN 940053-17	
General tolerances Allgemeine Toleranzen	ISO 2768-mK:1989	
General tolerances for linear dimensions Allgemeintoleranzen fuer Laengenmasse		
>120-400	±0.5	
>30-120	±0.3	
>6-30	±0.2	
≥0.5-6	±0.1	
Drawing standard Zeichnungsnorm	ISO	FN 940051
Tolerancing Tolerierung	DIN 7167	
Measuring strategy Messstrategie	FN 940114	
Surface texture Oberflaechenbeschaffenheit	FN940011-3	
Theor. mass for info only Theor. Masse nur zur Info	Not relevant Nicht relevant	
Total area Gesamtflaeche	Not relevant Nicht relevant	
Corrosion resistance class Korrosionsbestaendigkeitsklasse		
FN 940070	Not relevant Nicht relevant	
Coating Ueberzug		
No coating Kein Ueberzug		
LABS (PWIS) conformity LABS Konformitaet	-	

© Copyright by Festo SE & Co. KG
All rights reserved. Referred to protection notice ISO 16016.

Rev. -	ECN 290881			Qty.
Project-No.	Language EN / DE	Type D-MS ADAPTER PLATES		
	Date	Name	Material	
Created	14-03-2025			
Checked	31-12-2099			
Released	31-12-2099		Made of	
Scale 1:1	Description Adapter plate ADAPTERPLATTE		Doc-Type DRW	Material-No. see table Document-No. E08343794
Sheet 7/13	Unit mm			

FESTO

DIN A2

Creo - drawing

Recommended adapter plate
thickness: 10mm

(example combination)
SCALE 1:2

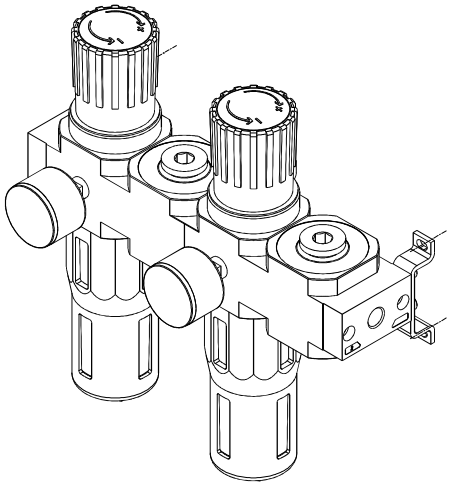

D-MIDI → MS6

4 module combinations

(example combination)
SCALE 1:2

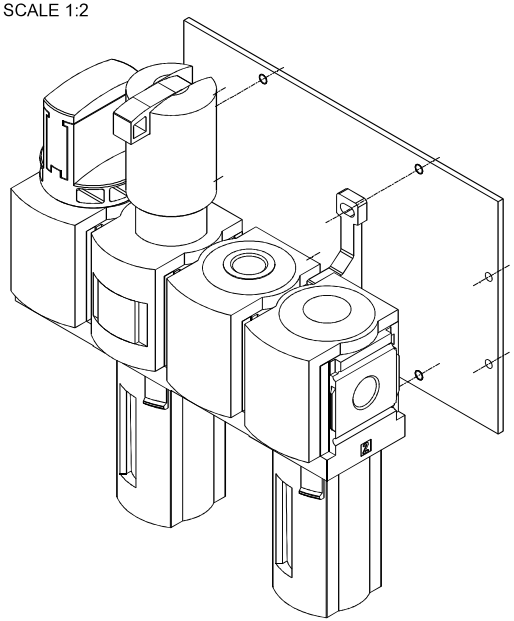

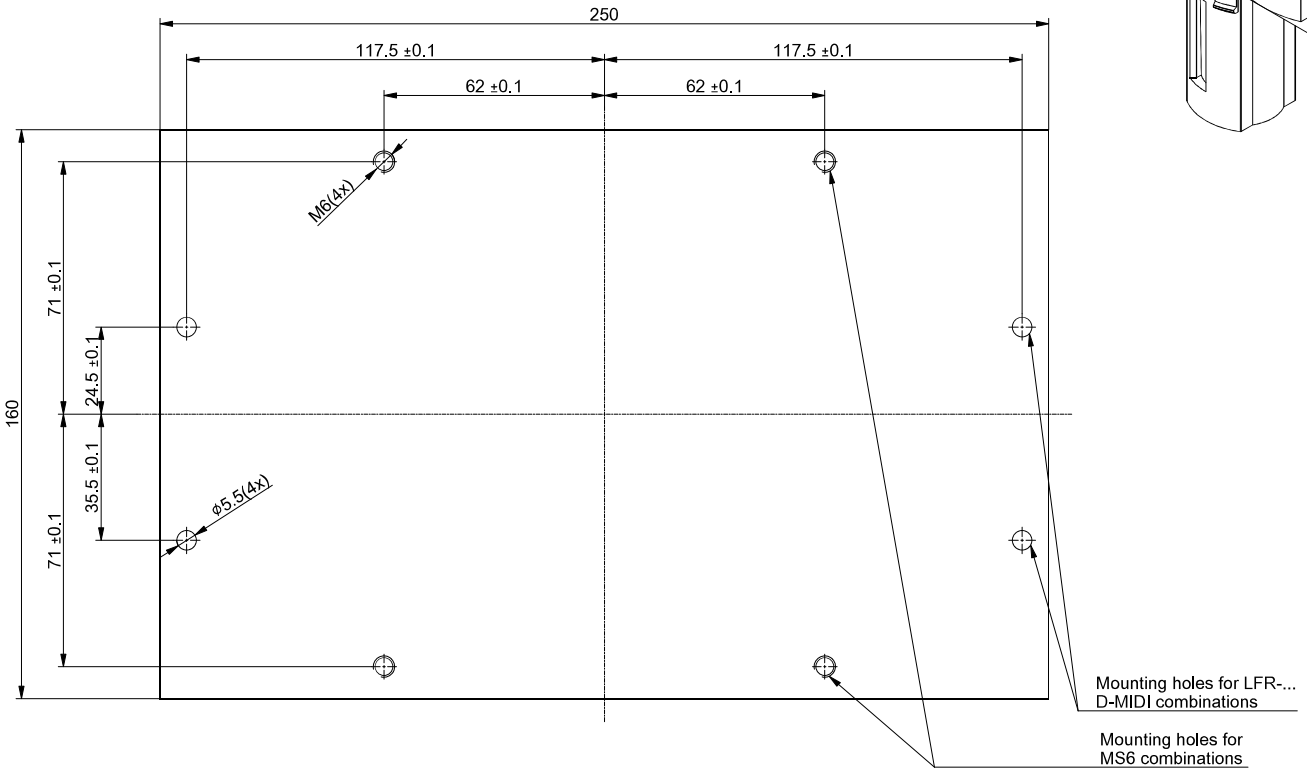

TF	Machining Spanen	
Additional data Weitere Angaben	FN 940053-1 FN 940053-17	
General tolerances Allgemeine Toleranzen	ISO 2768-mK:1989	
General tolerances for linear dimensions Allgemeintoleranzen fuer Laengenmasse		
>120-400	±0.5	
>30-120	±0.3	
>6-30	±0.2	
≥0.5-6	±0.1	
Drawing standard Zeichnungsnorm	ISO	FN 940051
Tolerancing Tolerierung	DIN 7167	
Measuring strategy Messstrategie	FN 940114	
Surface texture Oberflaechenbeschaffenheit	FN940011-3	
Theor. mass for info only Theor. Masse nur zur Info	Not relevant Nicht relevant	
Total area Gesamtflaeche	Not relevant Nicht relevant	
Corrosion resistance class Korrosionsbestaendigkeitsklasse		
FN 940070	Not relevant Nicht relevant	
Coating Ueberzug		
No coating Kein Ueberzug		
LABS (PWIS) conformity LABS Konformitaet	-	

Recommended adapter plate
thickness: 10mm

© Copyright by Festo SE & Co. KG
All rights reserved. Referred to protection notice ISO 16016.

Rev. -	ECN 290881			Qty.
Project-No.	Language EN / DE	Type D-MS ADAPTER PLATES		
	Date	Name	Material	
Created	14-03-2025			
Checked	31-12-2099			
Released	31-12-2099		Made of	
Scale 1:1	Description Adapter plate ADAPTERPLATTE		Doc-Type DRW	Material-No. see table Document-No. E08343794
Sheet 8/13	Unit mm			

FESTO

DIN A2

Creo - drawing

(example combination)
SCALE 1:2

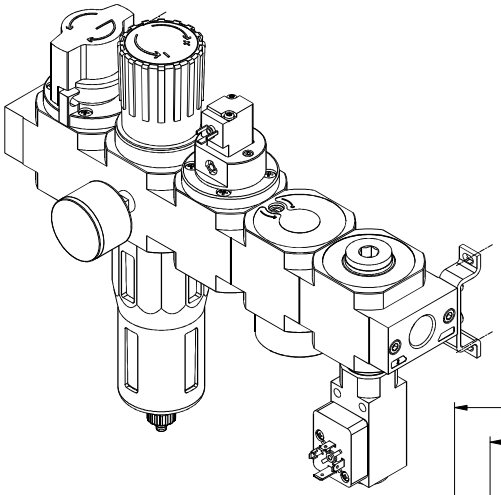

D-MIDI → MS6

5 module combinations

(example combination)
SCALE 1:2

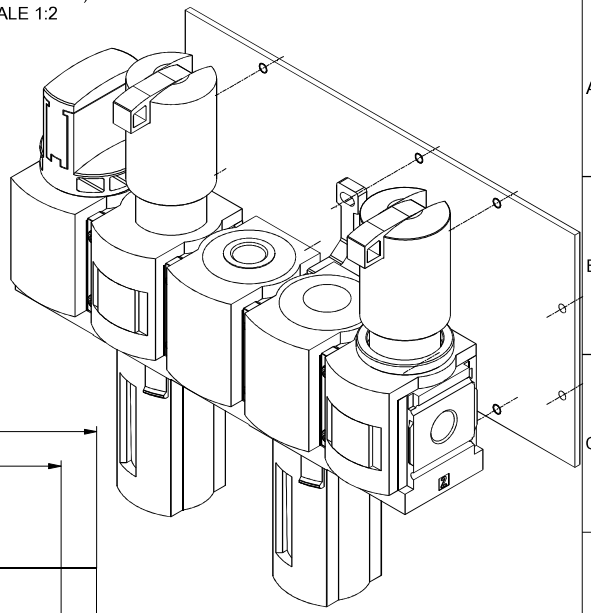

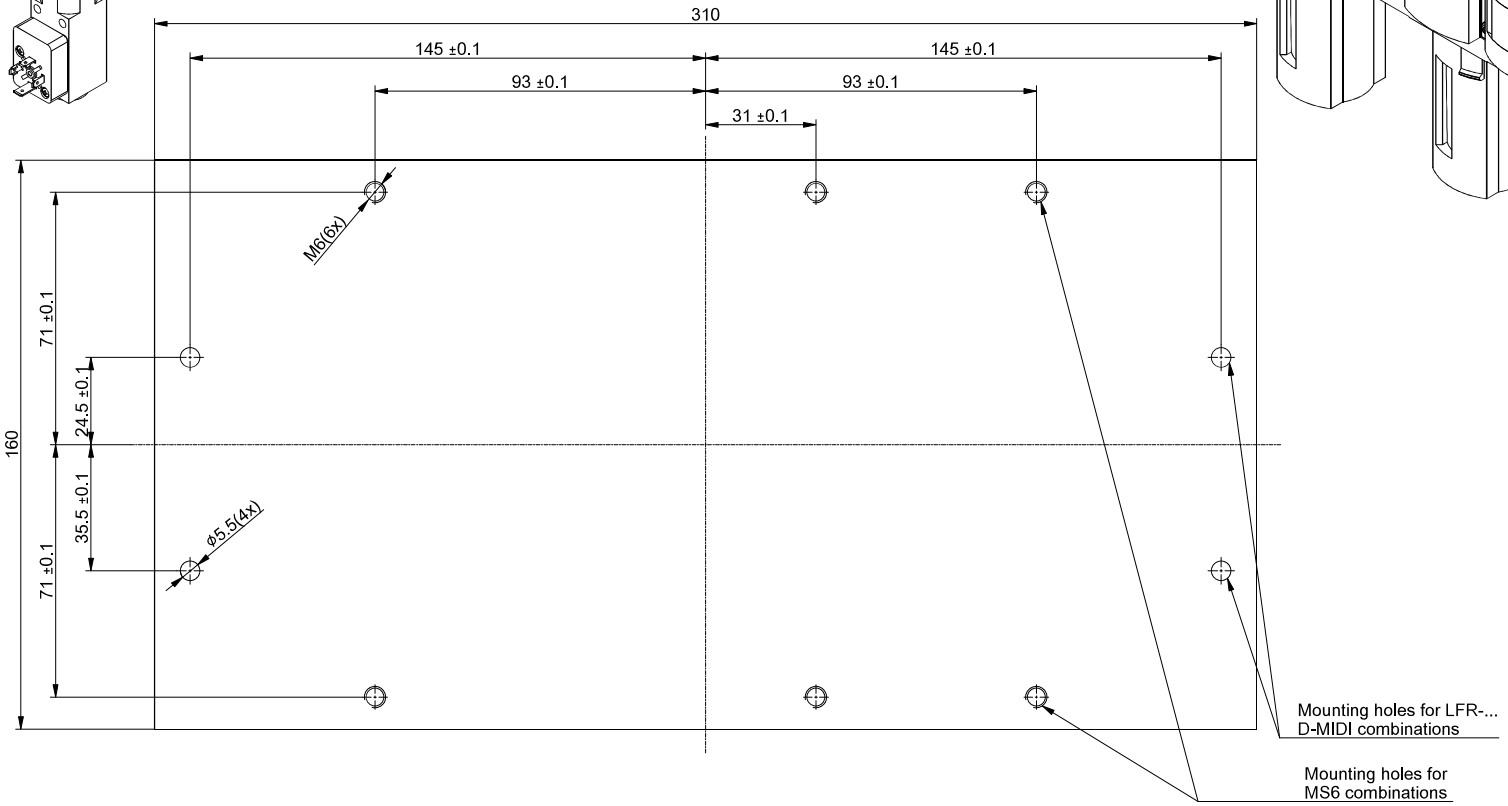

TF	Machining Spanen	
Additional data Weitere Angaben	FN 940053-1 FN 940053-17	
General tolerances Allgemeine Toleranzen	ISO 2768-mK:1989	
General tolerances for linear dimensions Allgemeintoleranzen fuer Laengenmasse		
>120-400	±0.5	
>30-120	±0.3	
>6-30	±0.2	
≥0.5-6	±0.1	
Drawing standard Zeichnungsnorm	ISO	FN 940051
Tolerancing Tolerierung	DIN 7167	
Measuring strategy Messstrategie	FN 940114	
Surface texture Oberflaechenbeschaffenheit	FN940011-3	
Theor. mass for info only Theor. Masse nur zur Info	Not relevant Nicht relevant	
Total area Gesamtflaeche	Not relevant Nicht relevant	
Corrosion resistance class Korrosionsbestaendigkeitsklasse		
FN 940070	Not relevant Nicht relevant	
Coating Ueberzug		
No coating Kein Ueberzug		
LABS (PWIS) conformity LABS Konformitaet	-	

Recommended adapter plate
thickness: 10mm

© Copyright by Festo SE & Co. KG
All rights reserved. Referred to protection notice ISO 16016.

Rev. -	ECN 290881	Qty.	
Project-No.	Language EN / DE	Type D-MS ADAPTER PLATES	
	Date	Name	Material
Created	14-03-2025		
Checked	31-12-2099		
Released	31-12-2099		Made of
Scale 1:1	Description Adapter plate ADAPTERPLATTE	Doc-Type DRW	Material-No. see table
			Document-No. E08343794
Sheet 9/13	Unit mm		

FESTO

DIN A2

Creo - drawing

(example combination)
SCALE 1:2

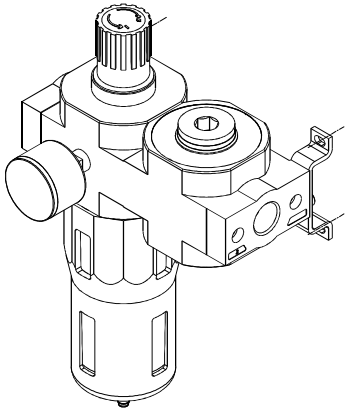

D-MAXI → MS6

2 module combinations

(example combination)
SCALE 1:2

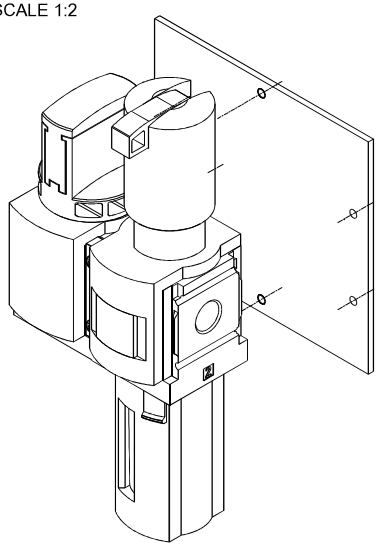

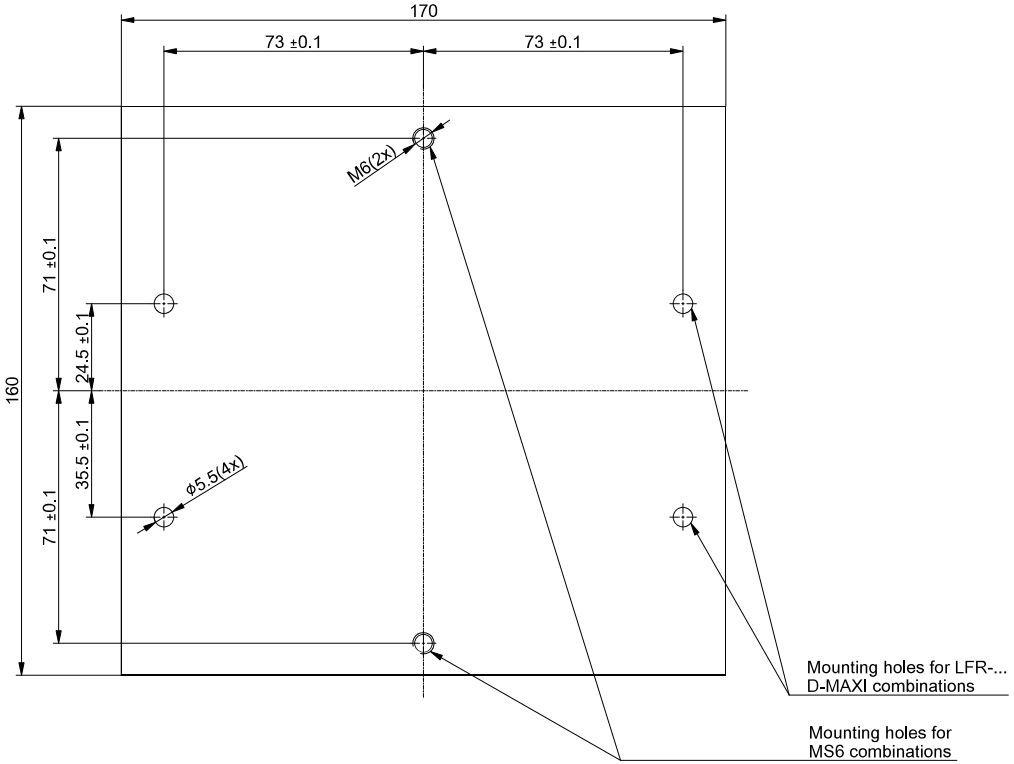

TF	Machining Spanen	
Additional data Weitere Angaben	FN 940053-1 FN 940053-17	
General tolerances Allgemeine Toleranzen	ISO 2768-mK:1989	
General tolerances for linear dimensions Allgemeintoleranzen fuer Laengenmasse		
>120-400	±0.5	
>30-120	±0.3	
>6-30	±0.2	
≥0.5-6	±0.1	
Drawing standard Zeichnungsnorm	ISO	FN 940051
Tolerancing Tolerierung	DIN 7167	
Measuring strategy Messstrategie	FN 940114	
Surface texture Oberflaechenbeschaffenheit	FN940011-3	
Theor. mass for info only Theor. Masse nur zur Info	Not relevant Nicht relevant	
Total area Gesamtflaeche	Not relevant Nicht relevant	
Corrosion resistance class Korrosionsbestaendigkeitsklasse		
FN 940070	Not relevant Nicht relevant	
Coating Ueberzug		
No coating Kein Ueberzug		
LABS (PWIS) conformity LABS Konformitaet	-	

Recommended adapter plate
thickness: 10mm

© Copyright by Festo SE & Co. KG
All rights reserved. Referred to protection notice ISO 16016.

Rev. -	ECN 290881			Qty.
Project-No.	Language EN / DE	Type D-MS ADAPTER PLATES		
	Date	Name	Material	
Created	14-03-2025			
Checked	31-12-2099			
Released	31-12-2099		Made of	
Scale 1:1	Description Adapter plate ADAPTERPLATTE		Doc-Type DRW	Material-No. see table
				Document-No. E08343794
Sheet 10/13	Unit mm			

FESTO

DIN A2

Creo - drawing

(example combination)
SCALE 1:2

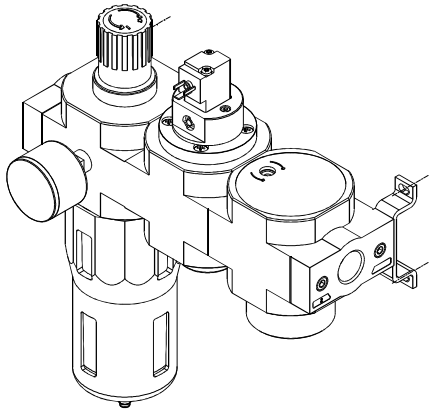

D-MAXI → MS6

3 module combinations

(example combination)
SCALE 1:2

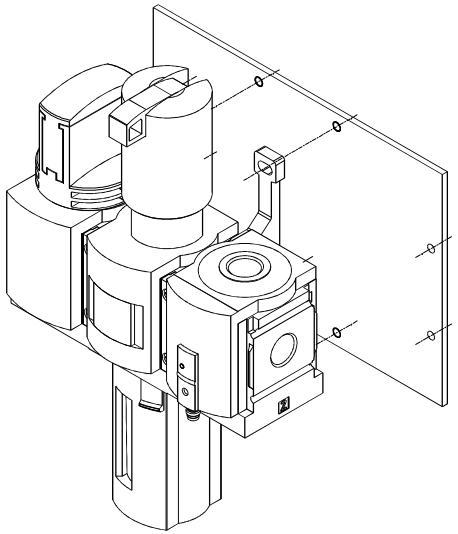

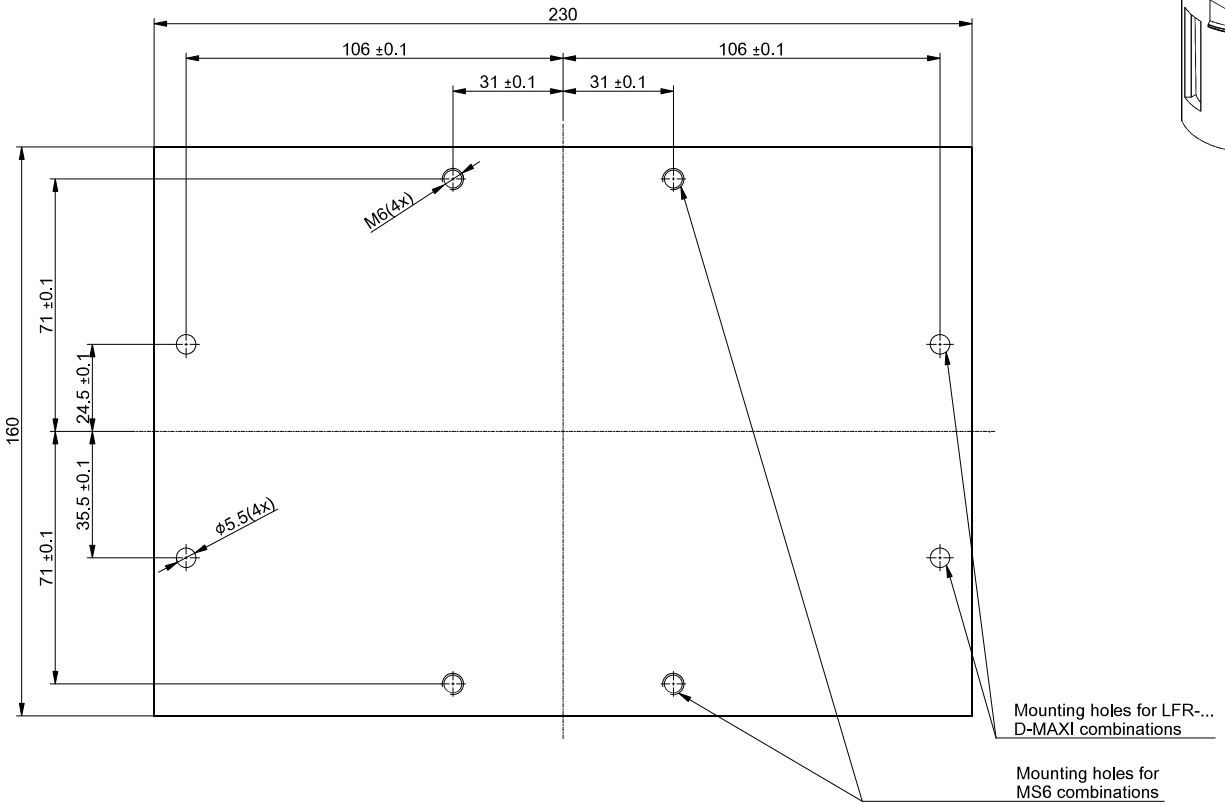

TF	Machining Spanen	
Additional data Weitere Angaben	FN 940053-1 FN 940053-17	
General tolerances Allgemeine Toleranzen	ISO 2768-mK:1989	
General tolerances for linear dimensions Allgemeintoleranzen fuer Laengenmasse		
>120-400	±0.5	
>30-120	±0.3	
>6-30	±0.2	
≥0.5-6	±0.1	
Drawing standard Zeichnungsnorm	ISO	FN 940051
Tolerancing Tolerierung	DIN 7167	
Measuring strategy Messstrategie	FN 940114	
Surface texture Oberflaechenbeschaffenheit	FN940011-3	
Theor. mass for info only Theor. Masse nur zur Info	Not relevant Nicht relevant	
Total area Gesamtflaeche	Not relevant Nicht relevant	
Corrosion resistance class Korrosionsbestaendigkeitsklasse		
FN 940070	Not relevant Nicht relevant	
Coating Ueberzug		
No coating Kein Ueberzug		
LABS (PWIS) conformity LABS Konformitaet	-	

Recommended adapter plate
thickness: 10mm

© Copyright by Festo SE & Co. KG
All rights reserved. Referred to protection notice ISO 16016.

Rev. -	ECN 290881	Qty.	
Project-No.	Language EN / DE	Type D-MS ADAPTER PLATES	
	Date	Name	Material
Created	14-03-2025		
Checked	31-12-2099		
Released	31-12-2099		Made of
Scale 1:1	Description Adapter plate ADAPTERPLATTE	Doc-Type DRW	Material-No. see table
			Document-No. E08343794
Sheet 11/13	Unit mm		

FESTO

DIN A2

Creo - drawing

(example combination)
SCALE 1:4

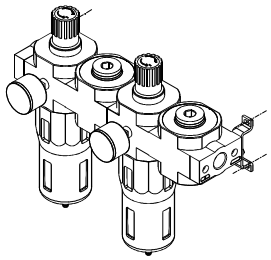

D-MAXI → MS6

4 module combinations

(example combination)
SCALE 1:4

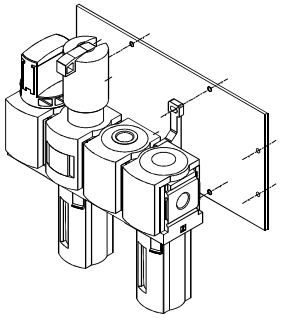

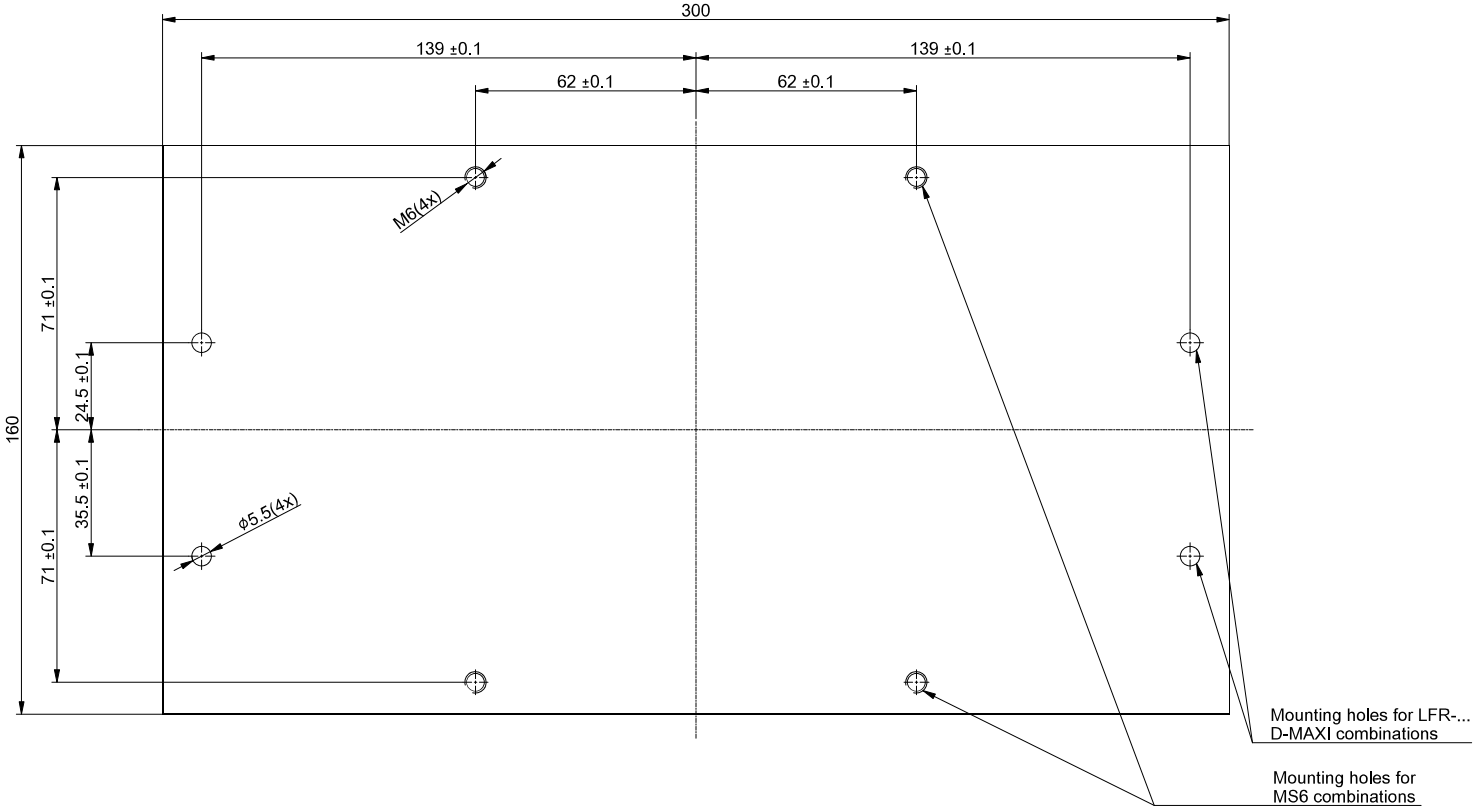

TF	Machining Spanen	
Additional data Weitere Angaben	FN 940053-1 FN 940053-17	
General tolerances Allgemeine Toleranzen	ISO 2768-mK:1989	
General tolerances for linear dimensions Allgemeintoleranzen fuer Laengenmasse		
>120-400	±0.5	
>30-120	±0.3	
>6-30	±0.2	
≥0.5-6	±0.1	
Drawing standard Zeichnungsnorm	ISO	FN 940051
Tolerancing Tolerierung	DIN 7167	
Measuring strategy Messstrategie	FN 940114	
Surface texture Oberflaechenbeschaffenheit	FN940011-3	
Theor. mass for info only Theor. Masse nur zur Info	Not relevant Nicht relevant	
Total area Gesamtflaeche	Not relevant Nicht relevant	
Corrosion resistance class Korrosionsbestaendigkeitsklasse		
FN 940070	Not relevant Nicht relevant	
Coating Ueberzug		
No coating Kein Ueberzug		
LABS (PWIS) conformity LABS Konformitaet	-	

© Copyright by Festo SE & Co. KG
All rights reserved. Referred to protection notice ISO 16016.

Rev. -	ECN 290881			Qty.
Project-No.	Language EN / DE	Type D-MS ADAPTER PLATES		
	Date	Name	Material	
Created	14-03-2025			
Checked	31-12-2099			
Released	31-12-2099		Made of	
Scale 1:1	Description Adapter plate ADAPTERPLATTE		Doc-Type DRW	Material-No. see table
				Document-No. E08343794
Sheet 12/13	Unit mm			

FESTO

DIN A2

Creo - drawing

Recommended adapter plate
thickness: 10mm

(example combination)
SCALE 1:4

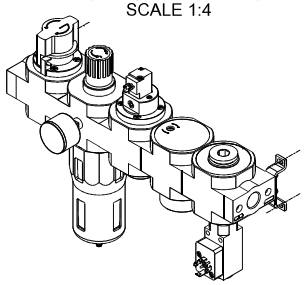

D-MAXI → MS6

5 module combinations

(example combination)
SCALE 1:4

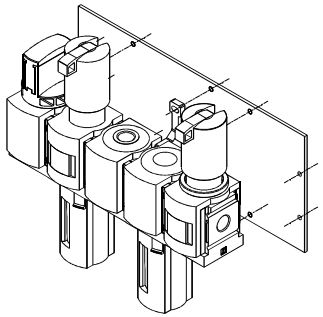

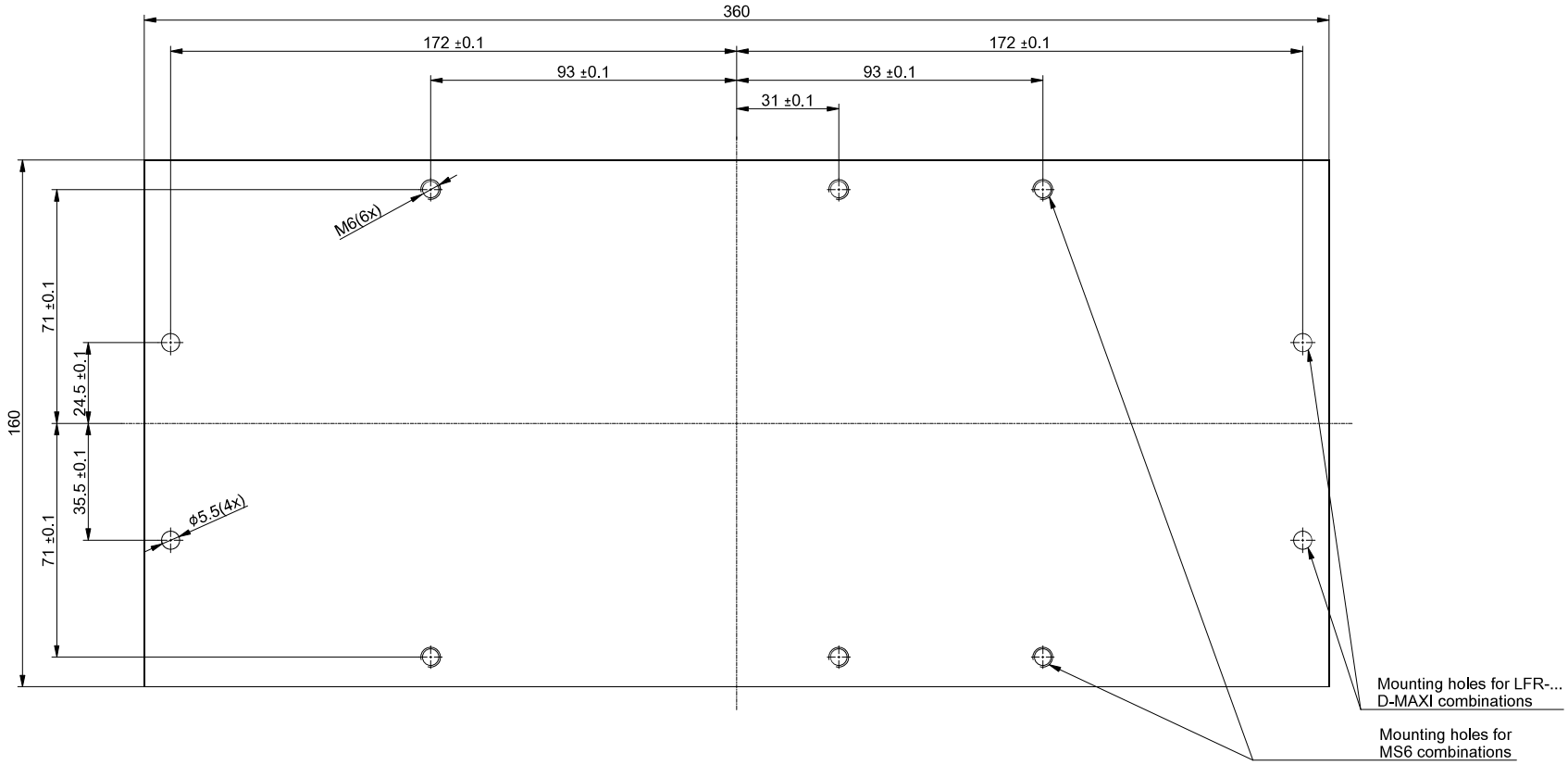

TF	Machining Spanen	
Additional data Weitere Angaben	FN 940053-1 FN 940053-17	
General tolerances Allgemeine Toleranzen	ISO 2768-mK:1989	
General tolerances for linear dimensions Allgemeintoleranzen fuer Laengenmasse		
>120-400	±0.5	
>30-120	±0.3	
>6-30	±0.2	
≥0.5-6	±0.1	
Drawing standard Zeichnungsnorm	ISO	FN 940051
Tolerancing Tolerierung	DIN 7167	
Measuring strategy Messstrategie	FN 940114	
Surface texture Oberflaechenbeschaffenheit	FN940011-3	
Theor. mass for info only Theor. Masse nur zur Info	Not relevant Nicht relevant	
Total area Gesamtflaeche	Not relevant Nicht relevant	
Corrosion resistance class Korrosionsbestaendigkeitsklasse		
FN 940070	Not relevant Nicht relevant	
Coating Ueberzug		
No coating Kein Ueberzug		
LABS (PWIS) conformity LABS Konformitaet	-	

© Copyright by Festo SE & Co. KG
All rights reserved. Referred to protection notice ISO 16016.

Rev. -	ECN 290881			Qty.
Project-No.	Language EN / DE	Type D-MS ADAPTER PLATES		
	Date	Name	Material	
Created	14-03-2025			
Checked	31-12-2099			
Released	31-12-2099		Made of	
Scale 1:1	Description Adapter plate ADAPTERPLATTE		Doc-Type DRW	Material-No. see table
				Document-No. E08343794
Sheet 13/13	Unit mm			

FESTO

DIN A2

Creo - drawing

Recommended adapter plate
thickness: 10mm