Ball screw axes EGC-BS-KF, with recirculating ball bearing guide

Selection aid

Overview of toothed belt and ball screw axes

Toothed belt axes

- Speeds of up to 10 m/s
- Acceleration of up to 50 m/s²
- Repetition accuracy of up to ±0.08 mm
- Strokes of up to 8500 mm (longer strokes on request)
- Flexible motor mountings

Ball screw axes

- Speeds of up to 2 m/s
- Acceleration of up to 20 m/s²
- Repetition accuracy of up to ±0.003 mm
- Strokes up to 3000 mm

Coordinate system

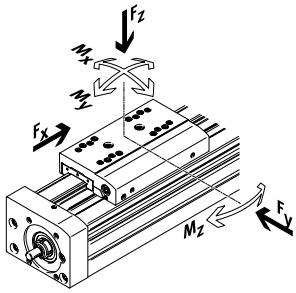

Toothed belt axes

Type	F_x [N]	v [m/s]	Mx [Nm]	My [Nm]	Mz [Nm]	Characteristics
Heavy-duty recirculating ball bearing guide						
EGC-HD-TB						
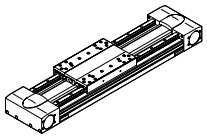	450 1000 1800	3 5 5	140 300 900	275 500 1450	275 500 1450	• Flat drive unit with rigid, closed profile • Precision DUO guide rail with high load capacity • Ideal as a base axis for linear gantries and cantilever axes
Recirculating ball bearing guide						
EGC-TB-KF						
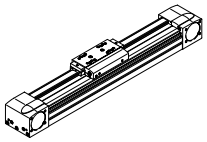	50 100 350 800 2500	3 5 5 5 5	3.5 16 36 144 529	10 132 228 680 1820	10 132 228 680 1820	• Rigid, closed profile • Precision guide rail with high load capacity • Small drive pinions reduce required driving torque • Space-saving position sensing
ELGA-TB-KF						
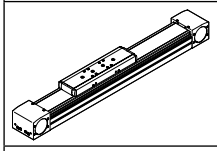	350 800 1300 2000	5 5 5 5	16 36 104 167	132 228 680 1150	132 228 680 1150	• Internal guide and toothed belt • Precision guide rail with high load capacity • Guide and toothed belt protected by cover strip • High feed forces
ELGA-TB-KF-F1						
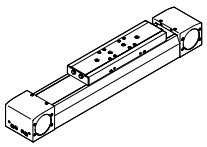	260 600 1000	5 5 5	16 36 104	132 228 680	132 228 680	• Suitable for use in the food zone • "Clean look": smooth, easy-to-clean surfaces • Internal guide and toothed belt • Precision guide rail with high load capacity • Guide and toothed belt protected by cover strip
ELGC-TB-KF						
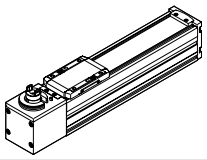	75 120 250	1.2 1.5 1.5	5.5 29.1 59.8	4.7 31.8 56.2	4.7 31.8 56.2	• Internal guide and toothed belt • Precision guide rail with high load capacity • Guide and toothed belt protected by cover strip
ELGR-TB						
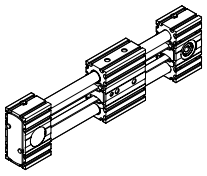	50 100 350	3 3 3	2.5 5 15	20 40 124	20 40 124	• Cost-optimised rod guide • Ready-to-install unit • Linear ball bearings with high load capacity for dynamic operation

Selection aid

Overview of toothed belt and ball screw axes

Toothed belt axes

- Speeds of up to 10 m/s
- Acceleration of up to 50 m/s²
- Repetition accuracy of up to ±0.08 mm
- Strokes of up to 8500 mm (longer strokes on request)
- Flexible motor mountings

Ball screw axes

- Speeds of up to 2 m/s
- Acceleration of up to 20 m/s²
- Repetition accuracy of up to ±0.003 mm
- Strokes up to 3000 mm

Coordinate system

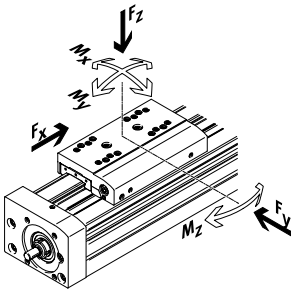

Toothed belt axes

Type	F_x [N]	v [m/s]	Mx [Nm]	My [Nm]	Mz [Nm]	Characteristics
Roller bearing guide						
ELGA-TB-RF						
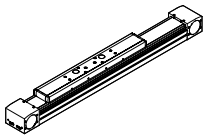	350 800 1300	10 10 10	11 30 100	40 180 640	40 180 640	• Heavy-duty roller bearing guide • Guide and toothed belt protected by cover strip • Speeds of up to 10 m/s • Lower weight than axes with guide rails
ELGA-TB-RF-F1						
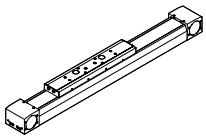	260 600 1000	10 10 10	8.8 24 80	32 144 512	32 144 512	• Suitable for use in the food zone • "Clean look": smooth, easy-to-clean surfaces • Heavy-duty roller bearing guide • Guide and toothed belt protected by cover strip • Lower weight than axes with guide rails
Plain-bearing guide						
ELGA-TB-G						
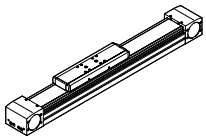	350 800 1300	5 5 5	5 10 120	30 60 120	10 20 40	• Guide and toothed belt protected by cover strip • For simple handling tasks • As a drive component for external guides • Insensitive to harsh ambient conditions
ELGR-TB-GF						
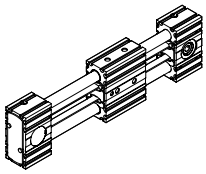	50 100 350	1 1 1	1 2.5 1	10 20 40	10 20 40	• Cost-optimised rod guide • Ready-to-install unit • Heavy-duty plain bearings for use in harsh ambient conditions

Selection aid

Overview of toothed belt and ball screw axes

Toothed belt axes

- Speeds of up to 10 m/s
- Acceleration of up to 50 m/s²
- Repetition accuracy of up to ±0.08 mm
- Strokes of up to 8500 mm (longer strokes on request)
- Flexible motor mountings

Ball screw axes

- Speeds of up to 2 m/s
- Acceleration of up to 20 m/s²
- Repetition accuracy of up to ±0.003 mm
- Strokes up to 3000 mm

Coordinate system

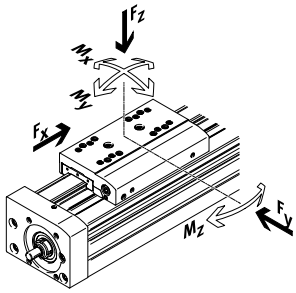

Ball screw axes Type	F_x [N]	v [m/s]	Mx [Nm]	My [Nm]	Mz [Nm]	Characteristics
Heavy-duty recirculating ball bearing guide						
EGC-HD-BS						
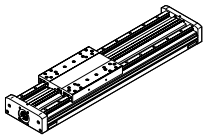	400 650 1500	0.5 1.0 1.5	140 300 900	275 500 1450	275 500 1450	• Flat drive unit with rigid, closed profile • Precision DUO guide rail with high load capacity • Ideal as a base axis for linear gantries and cantilever axes
Recirculating ball bearing guide						
EGC-BS-KF						
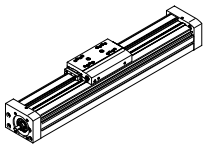	400 650 1500 3000	0.5 1.0 1.5 2.0	16 36 144 529	132 228 680 1820	132 228 680 1820	• Rigid, closed profile • Precision guide rail with high load capacity • For the highest requirements in terms of feed force and accuracy • Space-saving position sensing
ELGA-BS-KF						
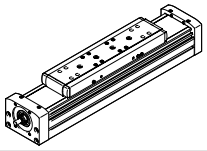	650 1600 3400 6400	0.5 1.0 1.5 2.0	16 36 104 167	132 228 680 1150	132 228 680 1150	• Internal guide and ball screw • Precision guide rail with high load capacity • For the highest requirements in terms of feed force and accuracy • Guide and ball screw protected by cover strip • Space-saving position sensing
ELGC-BS-KF						
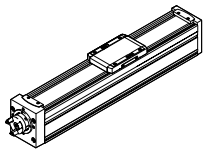	40 100 200 350	0.6 0.6 0.8 1.0	1.3 5.5 29.1 59.8	1.1 4.7 31.8 56.2	1.1 4.7 31.8 56.2	• Internal guide and ball screw • Guide and ball screw protected by cover strip • Space-saving position sensing
EGSK						
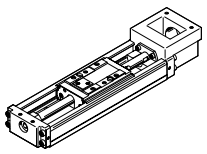	57 133 184 239 392	0.33 1.10 0.83 1.10 1.48	13 28.7 60 79.5 231	3.7 9.2 20.4 26 77.3	3.7 9.2 20.4 26 77.3	• Ball screw axes with maximum precision, compactness and rigidity • Recirculating ball bearing guide and ball screw without caged ball bearings • Standard designs in stock

Key features

At a glance

Powerful

- Generously sized profiles with an optimised cross section enable maximum rigidity and load capacity
- Speed, acceleration and torque resistance set a new standard

Cost-effective

- In addition to its technical data, the ball screw axis also offers an excellent price/performance ratio
- Thanks to its high performance, it is often possible to use one size smaller

Versatile

- Different screw pitches, numerous sizes and variants such as protected guides open up a broad range of applications
- Space-saving position sensing with proximity switch in the profile slot is possible
- Wide range of adaptation options on the drives
- Extensive mounting accessories for multi-axis combinations
- Ball screw support enables maximum travel speed with all stroke lengths

Characteristic values of the axes

The specifications shown in the table are maximum values.
The precise values for each of the variants can be found in the relevant data sheet in the catalogue.

Version	Size	Working stroke [mm]	Speed [m/s]	Repetition accuracy [mm]	Max. feed force [N]	Guide characteristics				
						Forces and torques				
						Fy [N]	Fz [N]	Mx [Nm]	My [Nm]	Mz [Nm]
Recirculating ball bearing guide										
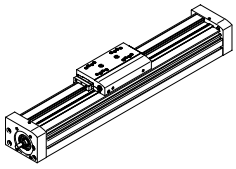	70	50 … 1000	0.5	±0.02	400	1850	1850	16	132	132
	80	50 … 2000	1.0	±0.02	650	3050	3050	36	228	228
	120	50 … 2500	1.5	±0.02	1500	6890	6890	144	680	680
	185	50 … 3000	2.0	±0.02	3000	15200	15200	529	1820	1820

Note

Engineering software
Electric Motion Sizing
www.festo.com/x/electric-motion-sizing

Key features

Slide variants

Standard slide

Extended slide

Additional slide

Guide options

Protected version

- The protected guide cleans the guide rail while the additional wiper seal protects the recirculating ball bearing guide

With central lubrication ➔ Page 24

- The lubrication adapter enables the guide and the ball screw to be permanently lubricated using semi or fully automatic relubrication devices
- The adapters are suitable for oils and greases
- All lubrication connections must be connected

Displacement encoder

➔ Page 13

- The position of the slide can be sensed directly when using the incremental displacement encoder. This means that all elasticities of the drivetrain can be detected and corrected by the motor controller.

Clamping unit

➔ Page 14

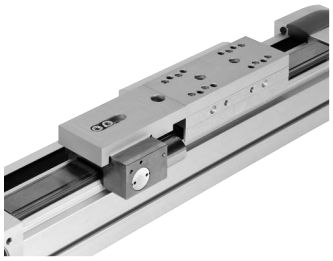

- 1- or 2-channel design, for holding loads
- Reliable holding is guaranteed since the forces act directly on the slide
- A limited number of emergency braking operations are permissible with sizes 120 and 185

Key features

Complete system comprising ball screw axis, motor, motor controller and motor mounting kit

Ball screw axis with recirculating ball bearing guide

Motor

Servo motor:
EMMT-AS
Stepper motor:
EMMB-ST/EMMT-ST

Note

A range of specially adapted complete solutions is available for the ball screw axis EGC and the motors.

Servo drives

Servo drive:
CMMT-AS
Servo drive for extra-low voltage:
CMMT-ST

Motor mounting kit

Axial kit

Parallel kit

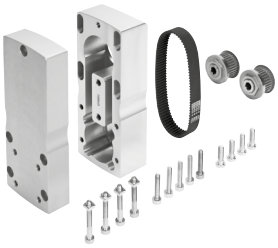

Peripherals overview

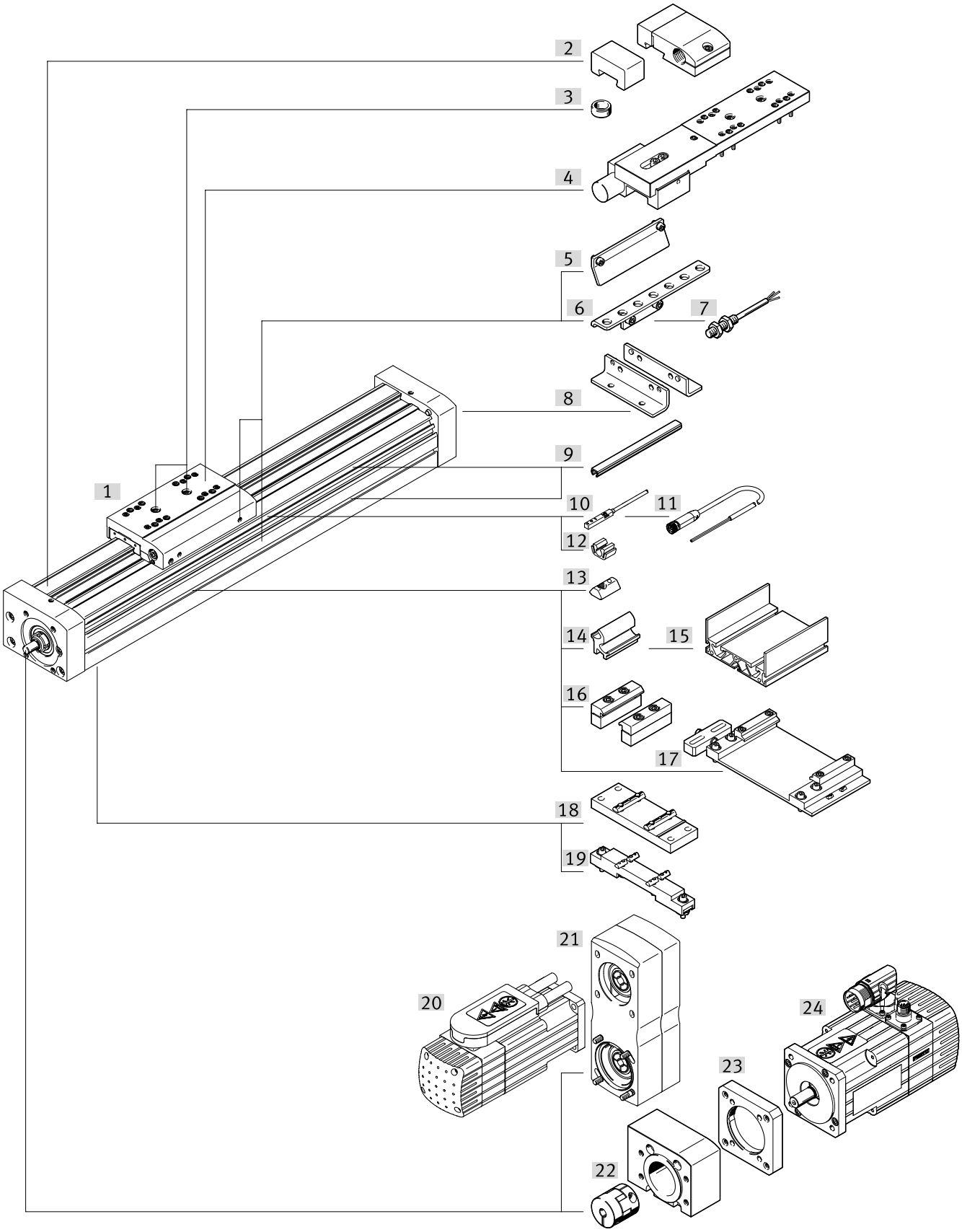

Peripherals overview

Variants and accessories

	Type	Description	→ Page/Internet
[1]	Ball screw axis EGC-BS-KF	Electric drive	10
[2]	Emergency buffer with retaining bracket NPE	For avoiding damage at the end stop in the event of malfunction	57
[3]	Centring pin/sleeve ZBS, ZBH	• For centring loads and attachments on the slide • Included in the scope of delivery: – With size 70: 2x ZBS-5 – With size 80, 120, 185: 2x ZBH-9	57
[4]	Clamping unit 1H...-PN, 2H-PN	For holding loads	14
[5]	Switch lug SF-EGC-1	For sensing the slide position	55
[6]	Sensor bracket HWS-EGC	Adapter for mounting the inductive proximity switches (round design) on the axis	56
[7]	Proximity switch, M8 SIEN	• Inductive proximity switch, round design	58
[8]	Foot mounting HPE	For mounting the axis on the end cap (only possible at one end)	50
[9]	Slot cover ABP	• For protection against contamination	57
[10]	Proximity switch, T-slot SIES	• Inductive proximity switch, for T-slot	58
[11]	Connecting cable NEBA	Via proximity switch	59
[12]	Clip SMBK	For mounting the proximity switch cable in the slot	57
[13]	Slot nut NST	For mounting attachments	57
[14]	Adapter kit DHAM	For mounting the support profile on the axis	58
[15]	Support profile HMIA	For mounting and guiding an energy chain	58
[16]	Profile mounting MUE	For mounting the axis on the side of the profile	51
[17]	Adjusting kit EADC-E16	For mounting the axis on a vertical surface. Once mounted, the axis can be aligned horizontally	54
[18]	Central support EAHF-L5	For mounting the axis on the profile from underneath	52
[19]	Adjusting kit EADC-E15	Height-adjustable. Can be used to easily compensate for any unevenness in the bearing surface	53
[20]	Motor EMMT	Motors specially matched to the axis, with or without brake	emmt
[21]	Parallel kit EAMM-U	For parallel motor mounting (comprising: housing, clamping sleeve, toothed belt pulley, toothed belt)	eamm-u
[22/ 23]	Axial kit EAMM-A	For axial motor mounting (comprising coupling, coupling housing and motor flange)	eamm-a
[24]	Motor EMMT	Motors specially matched to the axis, with or without brake	emmt
–	Guide axis EGC-FA	Axis without drive	egc-fa

Type codes

001	Series	
EGC	Electric linear axis	

002	Size	
70	70	
80	80	
120	120	
185	185	

003	Stroke range [mm]	
...	50 ... 3000	

004	Drive system	
BS	Ball screw drive	

005	Ball screw pitch	
10P	10 mm	
20P	20 mm	
25P	25 mm	
40P	40 mm	

006	Ball screw support	
	None	
S	With	

007	Guide	
KF	Recirculating ball bearing guide	

008	Stroke reserve [mm]	
...	0 ... 999	

009	Motor attachment position	
ML	Left	
MR	Right	

010	Slide	
GK	Standard slide	
GP	Standard slide, protected	
GV	Extended slide	
GQ	Extended slide, protected	

011	Additional slide left	
	None	
KL	Additional slide, standard, left	

012	Additional slide, right	
	None	
KR	Additional slide standard, right	

013	Lubrication function	
	None	
C	Lubrication adapter	

014	Displacement encoder	
	None	
M1	With displacement encoder, incremental, resolution 2.5 µm	
M2	With displacement encoder, incremental, resolution 10 µm	

015	Clamping unit	
	None	
1HL	Holding function, 1-channel, left	
1HR	Single-channel holding function, right	
2H	Holding function, 2-channel	

016	Actuation type	
	None	
PN	Pneumatically actuated	

Datasheet

Size
70 … 185

Stroke length
50 … 3000 mm

www.festo.com

Repair service

General technical data							
Size		70	80		120		185
Screw pitch	[mm/rev]	10	10	20	10	25	40
Design		Electromechanical axis with ball screw					
Guide		Recirculating ball bearing guide					
Mounting position		Any					
Working stroke							
EGC-…-GK/-GP	[mm]	50 … 1000	50 … 2000		50 … 2500		50 … 3000
EGC-…-GV/-GQ	[mm]	50 … 900	50 … 1900		50 … 2400		50 … 2900
Max. feed force F_x[1])	[N]	400	650		1500		3000
No-load torque at low travel speed	[Nm]	0.17	0.3	0.35	1.0	1.0	2.2
	[m/s]	0.05	0.1	0.1	0.2	0.2	0.2
No-load torque[2]) At max. travel speed	[Nm]	0,24	0,55	0,6	1,33	1,64	4,4
	[m/s]	0.5	0.5	1	0.6	1.5	2
Max. radial force[3])	[N]	220	250		500		4000
Max. rotational speed[4])	[rpm]	3000	3000		3600		3000
Max. acceleration	[m/s²]	15					
Repetition accuracy	[mm]	±0.02					

1) The feed force affects the service life. (→ Page 17)
2) Higher values possible for version with spindle support
3) At the drive shaft
4) Rotational speed and velocity are stroke-dependent

Operating and environmental conditions		
Ambient temperature	[°C]	–10 … +60
Degree of protection		IP40
Duty cycle	[%]	100

Datasheet

Weight [g]				
Size	70	80	120	185
Basic weight with 0 mm stroke[1])				
EGC-...-GK/-GP	1500	2700	12500	30000
EGC-...-GV/-GQ	2000	3500	14400	34500
Additional weight per 10 mm stroke	50	80	190	390
Moving mass				
EGC-...-GK/-GP	400	740	2400	8600
EGC-...-GV/-GQ	600	950	2900	9850
Additional slide				
EGC-...-KL/-KR	300	550	2000	6000
Clamping unit				
EGC-...-1H...-PN	–	700	2300	4900
EGC-...-2H-PN	–	1300	4000	8300

1) Including slide

Ball screw							
Size		70	80		120		185
Diameter	[mm]	12	15		25		40
Pitch	[mm/rev]	10	10	20	10	25	40

Mass moment of inertia							
Size		70	80		120		185
Screw pitch	[mm/rev]	10	10	20	10	25	40
J_O							
EGC -...- GK	[kg mm²]	1.99	5.2	5.2	64.46	64.46	594
EGC-...-GV	[kg mm²]	3.41	8.67	8.68	92	92	774.71
J_H per metre stroke	[kg mm²/m]	14.2	34.6	34.6	275.6	275.6	1803.1
J_L per kg payload	[kg mm²/Kg]	2.53	2.53	10.13	2.53	15.83	40.53
J_W Slide							
EGC -...- GK	[kg mm²]	1.04	1.86	7.46	6.09	38.06	348.87
EGC-...-GV	[kg mm²]	1.48	2.34	9.35	7.34	45.85	399.08
J_F Clamping unit							
EGC-...-1H...-PN	[kg mm²]	–	1.78	7.1	5.8	36.4	198.5
EGC-...-2H-PN	[kg mm²]	–	3.3	13.2	10	63.3	336.4

The mass moment of inertia J_A of the entire axis is calculated as follows:

$$J_A = J_O + \sum J_W + J_H \times \text{working stroke [m]} + J_L \times m_{payload}\,[\text{kg}] + J_F$$

$\sum J_W$ = Total mass moment of inertia of all slides, including the first slide

Datasheet

Materials

Sectional view

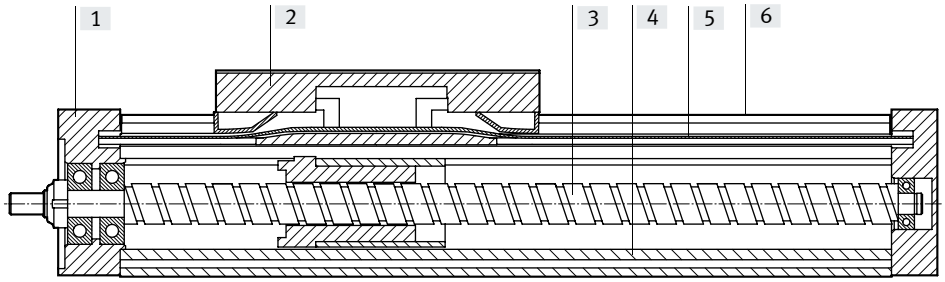

Axis		
[1]	End cap	Anodised wrought aluminium alloy
[2]	Slide	Anodised wrought aluminium alloy
[3]	Ball screw	Steel
[4]	Profile	Anodised aluminium
[5]	Cover strip	Polyurethane
[6]	Guide rail	High-alloy steel
	Note on materials	RoHs-compliant

Technical data – Displacement encoder			Dimensions ➔ page 42
Type		EGC-...-M1	EGC-...-M2
Resolution	[µm]	2.5	10
Max. travel speed with displacement encoder	[m/s]	4	4
Encoder signal		5 V TTL; A/A, B/B; reference signal (N/N) cyclically every 5 mm (zero pulse)	
Signal output		Line driver, alternating, resistant to sustained short circuit	
Electrical connection		8-pin plug connector, round design, M12	
Cable length	[mm]	160	

Operating and environmental conditions – Displacement encoder		
Ambient temperature	[°C]	–10 ... +70
Degree of protection		IP64
CE marking (see declaration of conformity)		To EU EMC Directive[1])

1) For information about the area of use, see the EC declaration of conformity at: www.festo.com/sp ➔ Certificates.
If the devices are subject to usage restrictions in residential, commercial or light-industrial environments, further measures for the reduction of the emitted interference may be necessary.

Application note

1) The displacement encoder contains paint-wetting impairment substances.
2) The ball screw axis with displacement encoder is not designed for the following application examples:

- Magnetic field

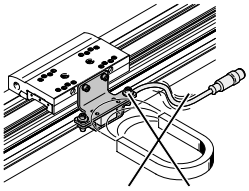

- Welding application

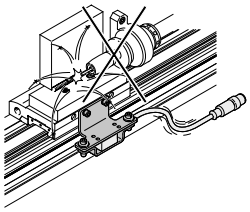

Datasheet

Technical data – Clamping unit				Dimensions → page 43
Size		80	120	185
Pneumatic connection		M5	M5	M5
Clamping type		Clamping via spring force, release via compressed air		
Static holding force				
EGC-...-1H...-PN	[N]	320	1200	1500
EGC-...-2H-PN	[N]	640	2400	3000
Max. number of emergency braking operations[1] at reference energy	[J]	– 	750 35	750 70
Number of clamping operations under rated load	[millions of switching cycles]	0.45	0.05	> 1.4

1) Emergency braking refers to braking the payload if the drive axis loses power.

Operating and environmental conditions – Clamping unit		
Operating medium		Compressed air to ISO 8573-1:2010 [7:4:4]
Operating pressure		
Clamping unit open	[bar]	4.5 ... 8
Clamping unit closed	[bar]	Unpressurised
Ambient temperature	[°C]	–10 ... +60

Note

The axis can only be relubricated with the lubrication adapter (EGC-...-C) when used in combination with the clamping unit.

Datasheet

Characteristic load values

The indicated forces and torques refer to the slide surface. The point of application of force is the point where the centre of the guide and the longitudinal centre of the slide intersect.
These values must not be exceeded during dynamic operation. Special attention must be paid to the deceleration phase.

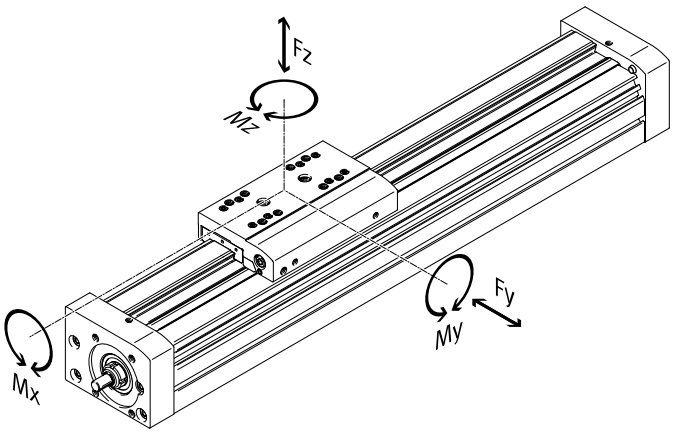

Max. permissible forces and torques at reference service life					
Size		70	80	120	185
Reference service life	[km]	5000			
$Fy_{max.}$	[N]	1850	3050	6890	15200
$Fz_{max.}$	[N]	1850	3050	6890	15200
$Mx_{max.}$	[Nm]	16	36	144	529
$My_{max.}/Mz_{max.}$					
EGC-...-GK/-GP	[Nm]	51	97	380	1157
$My_{max.}/Mz_{max.}$					
EGC-...-GV/-GQ	[Nm]	132	228	680	1820

Basic load ratings							
Size		70	80		120		185
Screw pitch	[mm/rev]	10	10	20	10	25	40
Ball screw							
Dynamic $c_{dyn,KGT}$	[N]	4000	6800	5700	14100	12700	25000

Note

For a guide system to have a service life of 5000 km, the load comparison factor must have a value of fv ≤ 1, based on the maximum permissible forces and torques for a service life of 5000 km.

If the axis is subjected to several of the indicated forces and torques at the same time, the following equation must be satisfied in addition to the indicated maximum loads:

Calculating the load comparison factor:

$$f_v = \frac{|F_{y1}|}{F_{y2}} + \frac{|F_{z1}|}{F_{z2}} + \frac{|M_{x1}|}{M_{x2}} + \frac{|M_{y1}|}{M_{y2}} + \frac{|M_{z1}|}{M_{z2}} \leq 1$$

F_1/M_1 = dynamic value
F_2/M_2 = maximum value

Datasheet

Service life of the guide

The service life of the guide depends on the load. To be able to make a statement as to the service life of the guide, the graph below plots the load comparison factor fv against the service life.

These values are only theoretical. You must consult your local Festo contact for a load comparison factor fv greater than 1.5.

Load comparison factor f_v as a function of service life

Example:
A user wants to move an X kg load. Using the formula (➔ page 15) gives a value of 1.5 for the load comparison factor f_v. According to the graph, the guide would have a service life of approx. 1500 km. Reducing the acceleration reduces the Mz and My values. A load comparison factor f_v of 1 now gives a service life of 5000 km.

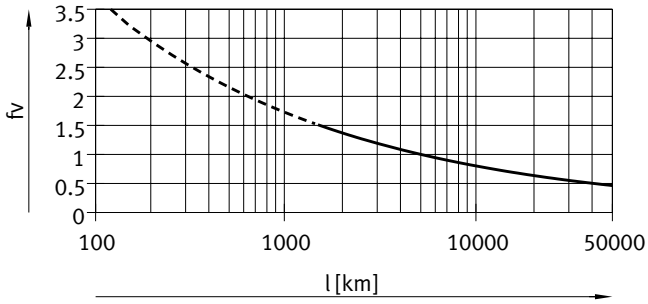

Note

Engineering software Electric Motion Sizing www.festo.com/x/electric-motion-sizing	The engineering software can be used to calculate the guide workload for a service life of 5000 km.	f_v > 1.5 are only theoretical comparison values for the recirculating ball bearing guide.

Comparison of the characteristic load values for 5000 km with dynamic forces and torques of recirculating ball bearing guides

The characteristic load values of the bearing guides are standardised to ISO and JIS using dynamic and static forces and torques. These forces and torques are based on an expected service life of the guide system of 100 km to ISO or 50 km to JIS.
As the characteristic load values are dependent on the service life, the maximum permissible forces and torques for a 5000 km service life cannot be compared with the dynamic forces and torques of bearing guides to ISO/JIS.

To make it easier to compare the guide capacity of linear axes EGC with bearing guides, the table below lists the theoretically permissible forces and torques for a calculated service life of 100 km. This corresponds to the dynamic forces and torques to ISO.
These 100 km values have been calculated mathematically and are only to be used for comparing with dynamic forces and torques to ISO. The drives must not be loaded with these characteristic values as this could damage the axes.

Max. permissible forces and torques for a theoretical service life of 100 km (from a guide perspective only)

Size		70	80	120	185
$Fy_{max.}$	[N]	6815	11236	25383	55997
$Fz_{max.}$	[N]	6815	11236	25383	55997
$Mx_{max.}$	[Nm]	59	133	531	1949
$My_{max.}/Mz_{max.}$					
EGC-...-GK/-GP	[Nm]	188	357	1400	4262
$My_{max.}/Mz_{max.}$					
EGC-...-GV/-GQ	[Nm]	486	840	2505	6705

Datasheet

Service life of the ball screw

- The service life of the ball screw axis depends on the service life of the guide (➔ Page 16) also depends on that of the screw drive.
  The operating coefficient plays a considerable role in determining the possible service life. It can be determined with the help of the table (➔ page 18)
- The service life ends when the maximum number of switching cycles or maximum running performance has been reached:
  – 5 million switching cycles or 5000 km running performance
- The distance between the foremost and rearmost positions must be at least 2.5 times the screw pitch per travel cycle
- The specifications for the running performance are based on experimentally determined and theoretically calculated data (at room temperature).
  The running performance that can be achieved in practice can deviate considerably from the specified curves under different parameters

Calculation of the mean feed force F_{xm} with ball screw

$$F_{xm} = \sqrt[3]{\frac{F_{x1}^3 \cdot s_1 + \ldots + F_n^3 \cdot s_n}{s_1 + \ldots + s_n}}$$

F_{xm} = Mean feed force
$F_{x1/n}$ = Feed force of section
$s_{1/n}$ = Part of movement cycle that is travel

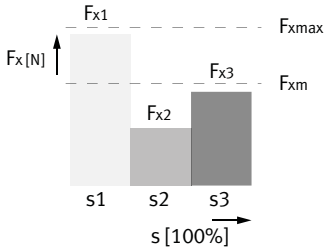

Mean feed force F_{xm} as a function of running performance L, with an operating coefficient f_B of 1.0, at room temperature

Size 70

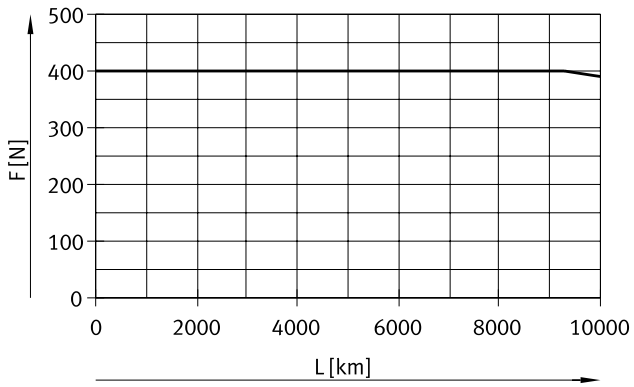

Size 80

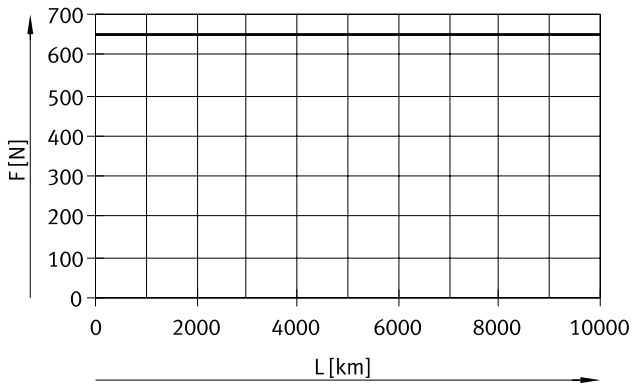

Datasheet

Mean feed force F_{xm} as a function of running performance L, with an operating coefficient f_B of 1.0, at room temperature

Size 120

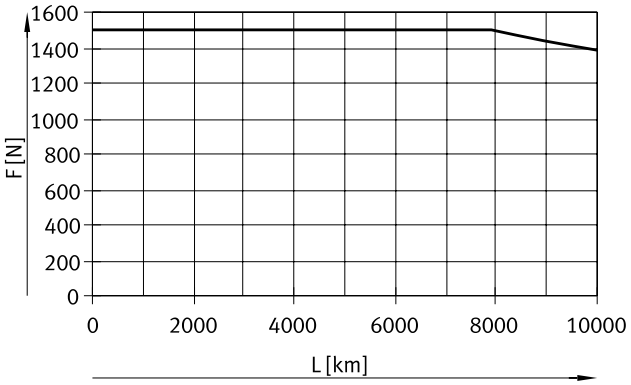

Size 185

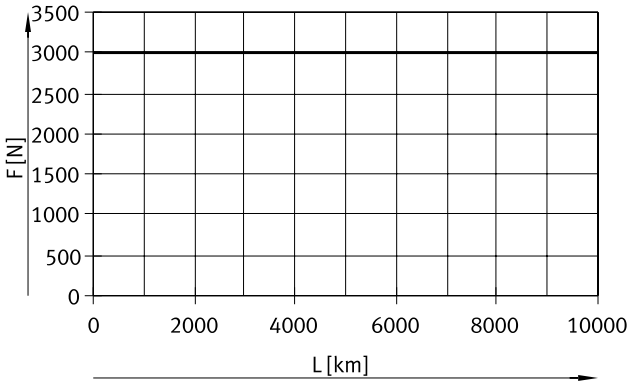

Service life taking into account the operating coefficient

$$L_1 = \frac{L}{f_B^3}$$

L_{ist} = Actual service life
L = Target service life
(➔ diagrams)
f_B = Operating coefficient

Load[1)]	Operating coefficient f_B	Application example
None	1.0 ... 1.2	Measuring machine
Light	1.2 ... 1.4	Handling, robot technology
Medium	1.4 ... 1.6	Press-in operations
High	1.6 ... 2.0	Construction, agriculture

1) Loads caused by impact, temperature, contamination, shock and vibrations

Datasheet

Speed v as a function of working stroke l

Size 70

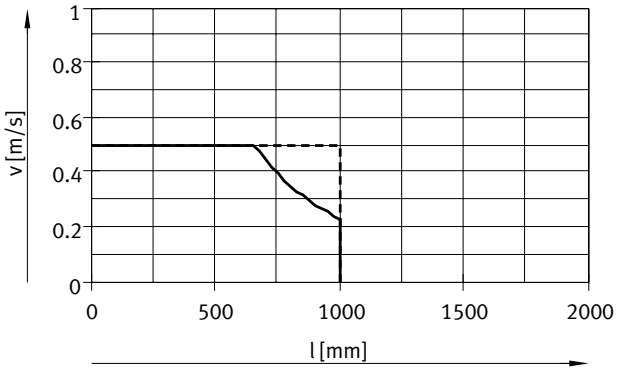

- EGC-70-10P without ball screw support
- EGC-70-10P with ball screw support

Size 80

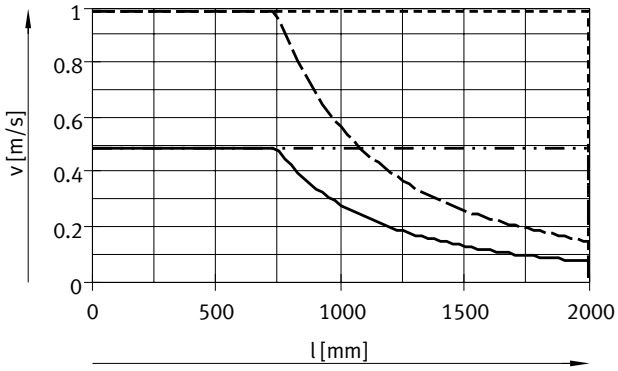

- EGC-80-10P without ball screw support
- EGC-80-10P with ball screw support
- EGC-80-20P without ball screw support
- EGC-80-20P with ball screw support

Size 120

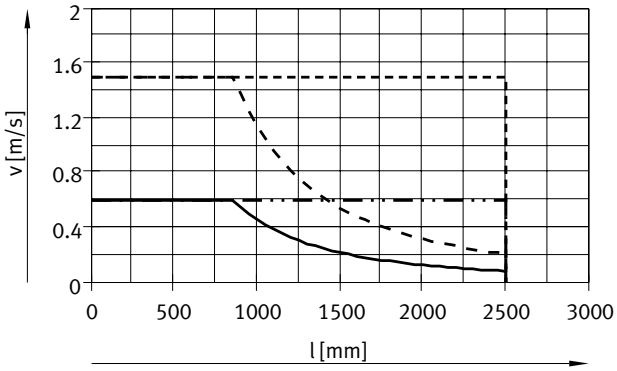

- EGC-120-10P without ball screw support
- EGC-120-10P with ball screw support
- EGC-120-25P without ball screw support
- EGC-120-25P with ball screw support

Size 185

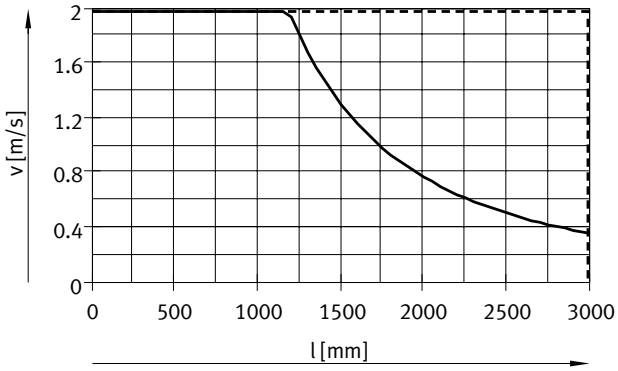

- EGC-185-40P without ball screw support
- EGC-185-40P with ball screw support

Note

The diagrams apply to the version with standard slide. With a long slide, the working stroke shown is reduced by 100 mm.

Speed v as a function of rotational speed n

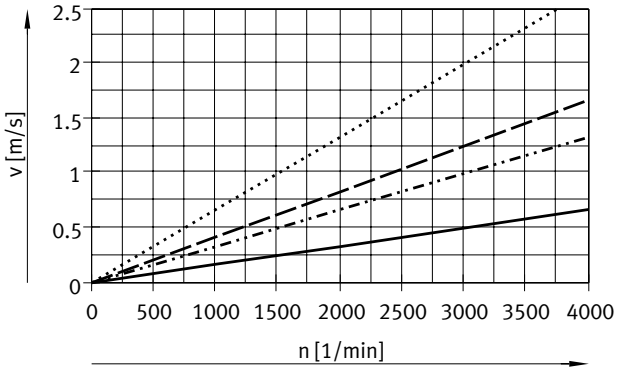

Note

Rotational speed is stroke-dependent.
Note the maximum rotational speed.

- EGC-70/-80-10P/-120-10P
- EGC-80-20P
- EGC-120-25P
- EGC-185-40P

Datasheet

Max. acceleration a as a function of payload m

Size 70

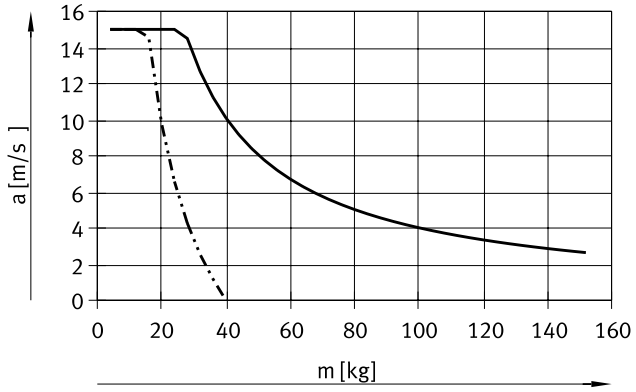

Size 80

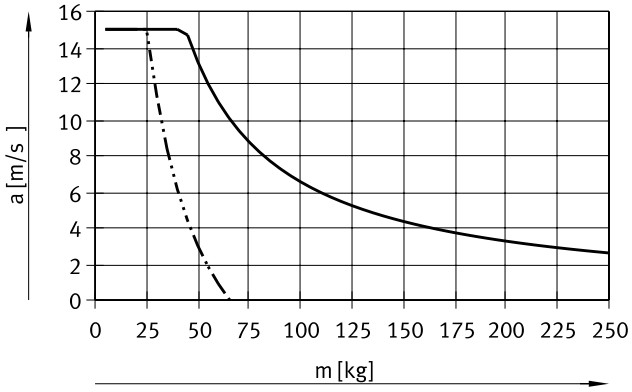

Size: 120

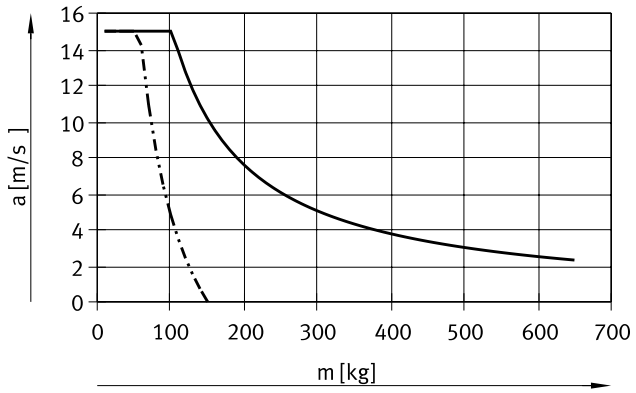

Size 185

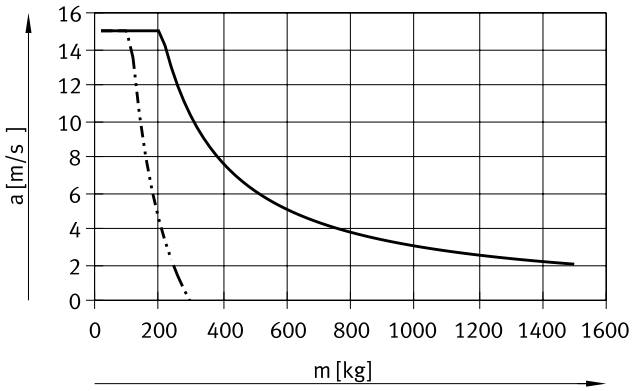

Horizontal mounting position
Vertical mounting position

Theoretical feed force F as a function of the input torque M

Size 70/80

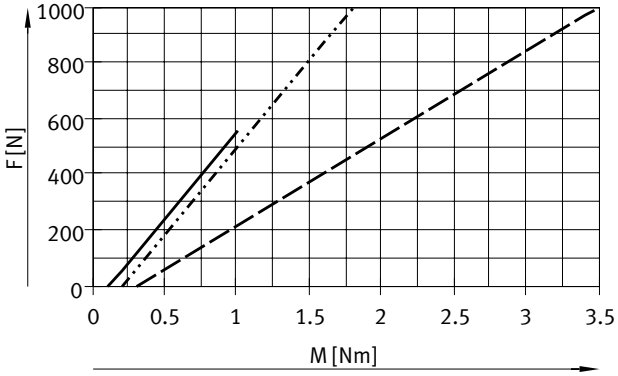

EGC-70-10P
EGC-80-10P
EGC-80-20P

Size 120/185

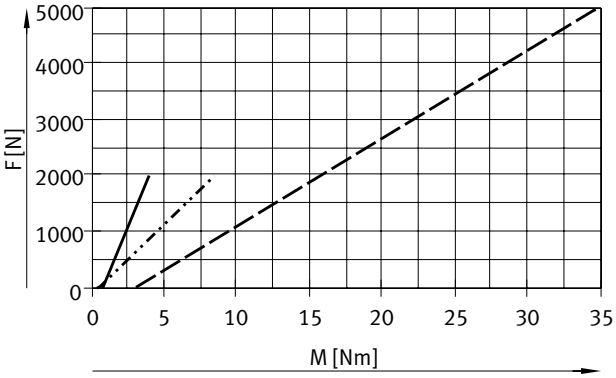

EGC-120-10P
EGC-120-25P
EGC-185-40P

Datasheet

Stroke reserve

Stroke length | Stroke reserve

The selected stroke corresponds in principle to the required working stroke. The variants GK/GV do not have a wiper seal on the guide. These variants therefore have an additional safety distance between the drive cover and slide that is not designated as part of the working stroke.

A safety distance (similar to GK/GV) between the drive cap and slide can be defined for the variants GP/GQ and GK-C/GV-C using the modular product system via the "stroke reserve" feature. With the variants GK/GV, the stroke reserve and safety distance are added for each end position.

- The stroke reserve length can be freely selected
- The sum of the stroke length and 2x stroke reserve must not exceed the maximum working stroke

Example:
EGC-70-500-BS-10P-KF-20H-...
Working stroke = 500 mm
2x stroke reserve = 40 mm

Total stroke = 540 mm
(540 mm = 500 mm + 2x 20 mm)

Size		70	80		120		185
Screw pitch	[mm/rev]	10	10	20	10	25	40
L9 = safety distance with GK/GV (per end position)	[mm]	10.5	13	13	18	18	21

Working stroke reduction

With standard slide GK/GP / extended slide GV/GQ with additional slide KL/KR

- The working stroke is reduced by the length of the additional slide and the distance between both slides
- If the variant GP/GQ is ordered, the additional slide is also protected
- If the variant GV/GQ is ordered, the additional slide is not extended
- If the variant GK-C/GV-C is ordered, the additional slide is also supplied with lubrication adapters

L17 = Slide length
L17 = Additional slide length

L = Distance between the two slides
[1] Additional slide

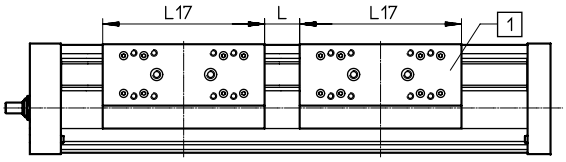

Example:
Type EGC-70-500-BS-...-GK-KL/KR
Working stroke without additional slide = 500 mm
L = 20 mm
L17 = 100 mm

Working stroke with additional slide = 380 mm
(500 mm – 20 mm – 100 mm)

Dimensions – Additional slide

Size		70		80		120		185	
Variant		GK/GV	GP/GQ or GK-C/GV-C	GK/GV	GP/GQ or GK-C/GV-C	GK/GV	GP/GQ or GK-C/GV-C	GK/GV	GK-C/GV-C
Length L17	[mm]	100	125	120	146	200	236	280	308

Datasheet

Working stroke reduction per side

With integrated emergency buffer NPE and shock absorber retainer KYE

- The working stroke is reduced by the total dimension of the emergency buffer and shock absorber retainer.
- The rubber buffer in the cap must be removed
- Shock absorbers must not be used in combination with lubrication adapters

Size		70	80	120	185
With emergency buffer	[mm]	43	68	98	133

Working stroke reduction

With integrated clamping unit

- The working stroke is reduced by the length of the clamping unit.
- With 1-channel clamping units, the stroke is reduced on one side with respect to the mounting surface
- With 2-channel clamping units, the stroke is reduced symmetrically with respect to the mounting surface of the load
- Shock absorbers must not be used in combination with the clamping unit.

Size		80	120	185
EGC-...-1H...-PN	[mm]	87	124	131
EGC-...-2H-PN	[mm]	174	248	262

2nd moment of area

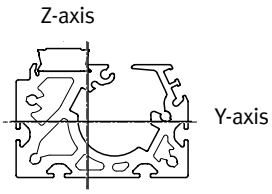

Size		70	80	120	185
Iy	[mm^4]	$4.19x10^5$	$9.81x10^5$	$5.01x10^6$	$2.61x10^7$
Iz	[mm^4]	$5.78x10^5$	$1.32x10^6$	$5.82x10^6$	$2.6x10^7$

Datasheet

Maximum permissible support spacing L (without profile mounting MUE/central support EAHF) as a function of force F

The axis may need to be supported in order to limit deflection in the case of long strokes.
The following graphs can be used to determine the maximum permissible support spacing l as a function of force F acting on the axis.
The deflection is f = 0.5 mm.

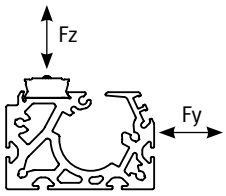

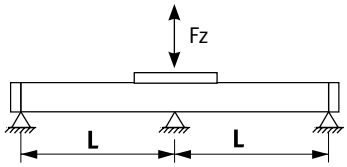

Force Fy

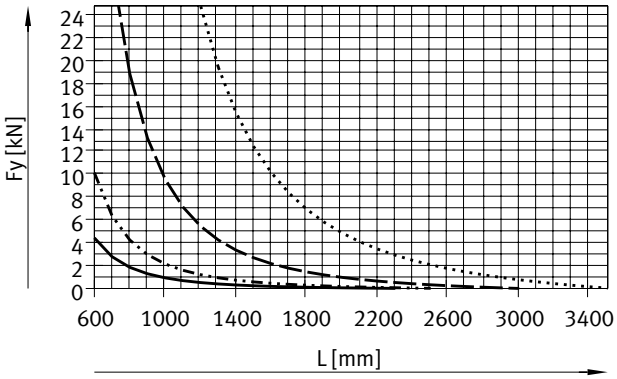

Force Fz

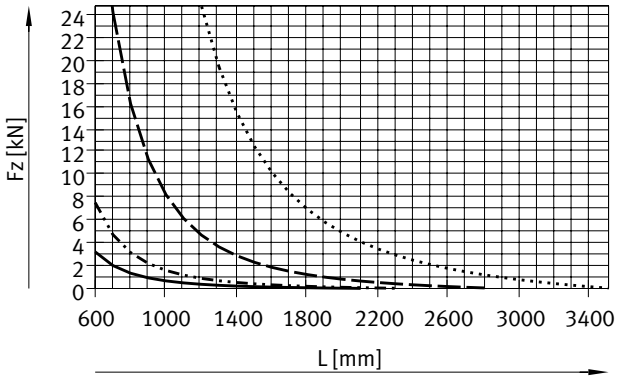

EGC-70
EGC-80
EGC-120
EGC-185

Recommended deflection limits

Adherence to the following deflection limits is recommended so as not to impair the functionality of the axes. Greater deformation can result in increased friction, greater wear and reduced service life.

Size	Dynamic deflection (load moves)	Static deflection (stationary load)
70 ... 185	0.05% of the axis length, max. 0.5 mm	0.1% of the axis length

Datasheet

Central lubrication

The lubrication adapters enable the guide and the ball screw of the axis EGC-BS to be permanently lubricated in applications in humid or wet ambient conditions using semi or fully automatic relubrication devices.

- For size 70, 80, 120, 185
- The modules are suitable for oils and greases.
- The dimensions of the ball screw axis EGC-BS are the same with and without central lubrication modules.
- There are three connection options on each side
- Can be used in combination with:
  - Standard slide GK
  - Extended slide GV
  - Additional slide KL, KR
- Cannot be used in combination with:
  - Protected recirculating ball bearing guide GP, GQ

Slide dimensions
➔ page 36

Connection option for customer design

The drawing on the right shows the connection option on the top lubrication interface using a customer design.

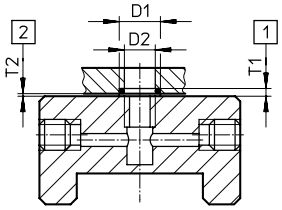

D1 $8^{+0.2}$ mm
D2 6 mm
T1 $0.6_{-0.05}$ mm
T2 $0.1^{+0.2}$ mm
O-ring ⌀ 6x1 mm (DIN3771)

[1] Slot depth for O-ring
[2] Required air gap

Additional dimensions ➔ page 36

Design of a central lubrication system

A central lubrication system requires various additional components. The illustration shows different options (using a hand pump, pneumatic container pump or electric container pump) required as a minimum for designing a central lubrication system. Festo does not sell these additional components; however, they can be obtained from the following companies:

- Lincoln
- Bielomatik
- SKF (Vogel)

Festo recommends these companies because they can supply all the necessary components.

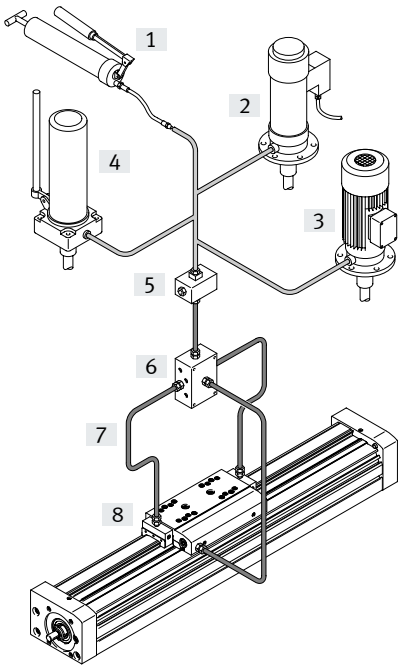

[1] Hand pump
[2] Pneumatic container pump
[3] Electric container pump
[4] Manually operated container pump
[5] Nipple block
[6] Distributor block
[7] Tubing or piping
[8] Fittings

Datasheet

Dimensions **Download CAD data → www.festo.com/de/engineering**

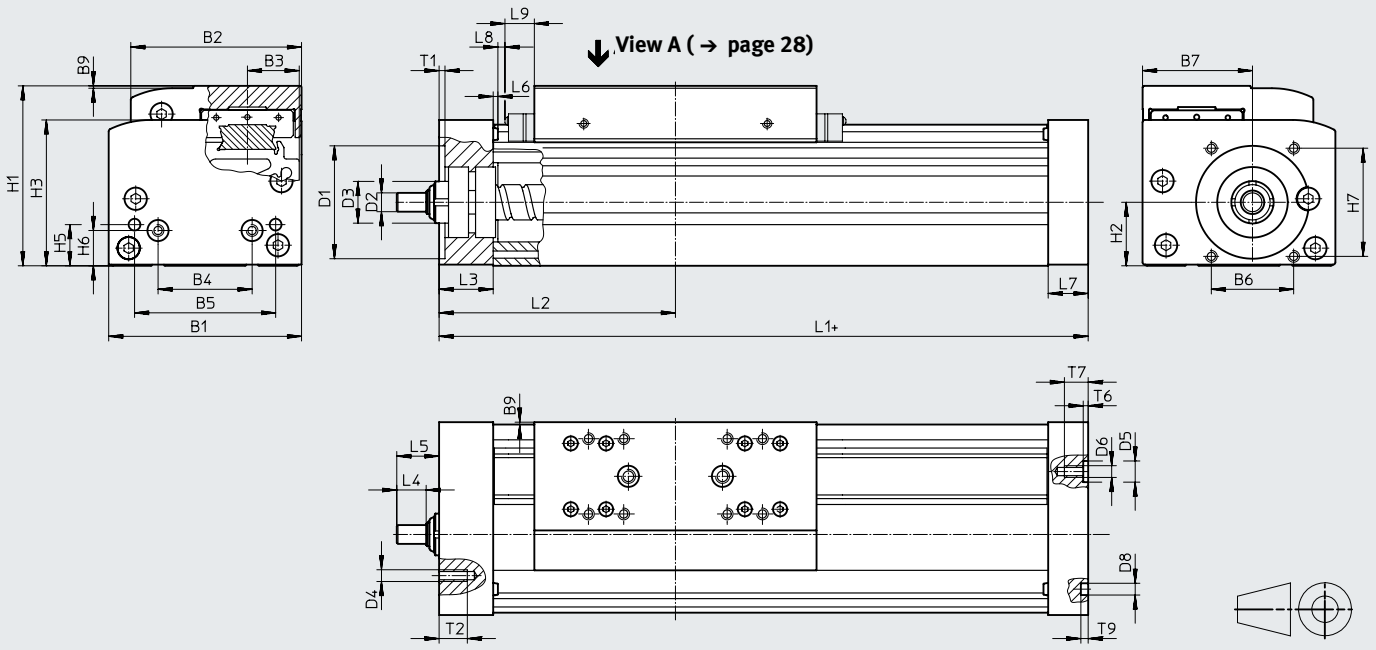

+ = plus stroke length + 2x stroke reserve
L9 For GK/GV: safety distance per end position,
For GP/GQ dimension for wiper seal → page 21,
For GK-C/GV-C dimension for adapter → page 36

Working stroke reduction in combination with additional slide → page 21

Size	Variant	Stroke	B1	B2	B3	B4	B5	B6	B7	B9	D1 ø H7	D2 ø h7	D3
70	GK/GP	50 … 1000	69	58.6	16.5	30	45	29	39	1	38	6	⌀13
	GV/GQ	50 … 900											
80	GK/GP	< 1477	82	72.6	22	40	60	35	46.75	1	48	8	ø18
		≥ 1477											
	GV/GQ	< 1377											
		≥ 1377											
120	GK/GP	< 1704	120	107	33	40	80	64	78	1	62	12	ø28
		≥ 1704											
	GV/GQ	< 1604											
		≥ 1604											
185	GK/GP	< 2361	186	169	53	120	80	80	114	1	95	25	ø44
		≥ 2361											
	GV/GQ	< 2261											
		≥ 2261											

Datasheet

Size	Variant	Stroke	D4	D5 ø H7	D6	D8 ø H7	H1	H2	H3	H5	H6	H7	L1	L2
70	GK/GP	50 … 1000	M5	–	M5	5	64	22.5	50.5	13	13	36	168	86.5
	GV/GQ	50 … 900											268	136.5
80	GK/GP	< 1477	M5	9	M5	5	76.5	27	62	17.5	15	46	196	101
		≥ 1477											236	121
	GV/GQ	< 1377											296	151
		≥ 1377											336	171
120	GK/GP	< 1704	M6	–	M8	9	111.5	42.5	89.5	22	22	54	309	156
		≥ 1704											369	186
	GV/GQ	< 1604											409	206
		≥ 1604											469	236
185	GK/GP	< 2361	M8	–	M10	9	172.5	65.2	141.5	25	25	80	412	209
		≥ 2361											512	259
	GV/GQ	< 2261											512	259
		≥ 2261											612	309

Size	Variant	Stroke	L3	L4	L5	L6	L7	L8	L9	T1	T2	T6	T7	T9
70	GK/GP	50 … 1000	21	8	14	1.8	16	3	10.5	2.5	12	–	10	3.1
	GV/GQ	50 … 900												
80	GK/GP	< 1477	23	12.5	18	2	17	3	13	2.5	12	2.1	10	3.1
		≥ 1477												
	GV/GQ	< 1377												
		≥ 1377												
120	GK/GP	< 1704	33	17.5	25.5	2	30	3	18	3	15	–	16	2.1
		≥ 1704												
	GV/GQ	< 1604												
		≥ 1604												
185	GK/GP	< 2361	43	23	30.5	2	37	3	21	3	20	–	20	2.1
		≥ 2361												
	GV/GQ	< 2261												
		≥ 2261												

Note

Requirements for the flatness of the bearing surface and of attachments as well as for use in parallel structures
➔ www.festo.com/sp User documentation

Datasheet

Dimensions Download CAD data ➔ www.festo.com

Profile

Size: 70

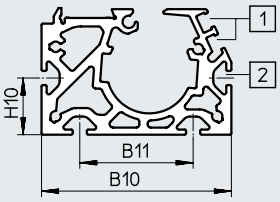

Size 80

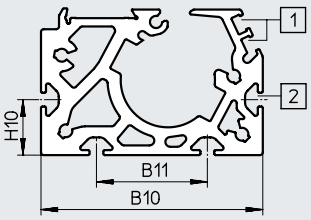

Size: 120

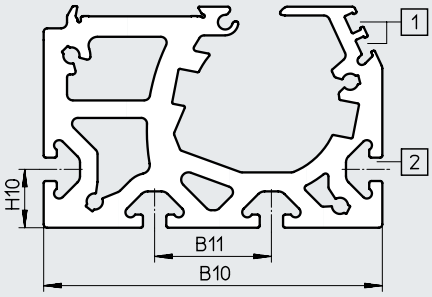

Size: 185

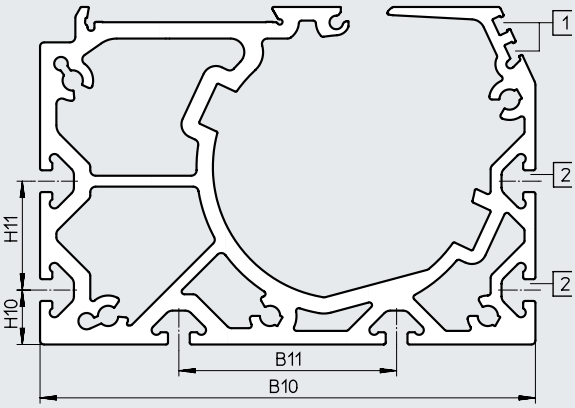

[1] Sensor slot for proximity switch
[2] Mounting slot for slot nut

Size	B10	B11	H10	H11
70	67	40	20	–
80	80	40	20	–
120	116	40	20	–
185	182	80	20	40

Datasheet

Dimensions Download CAD data ➔ www.festo.com

GK – Standard slide / GP – Standard slide, protected

Size 70

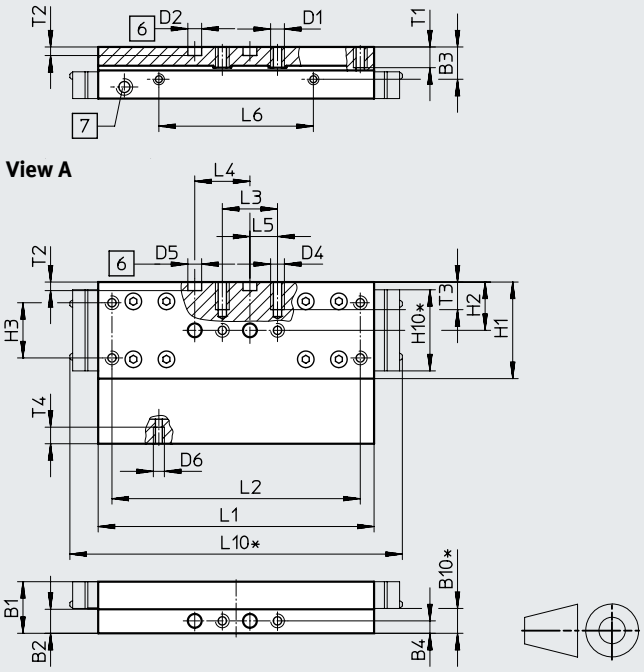

Size 80

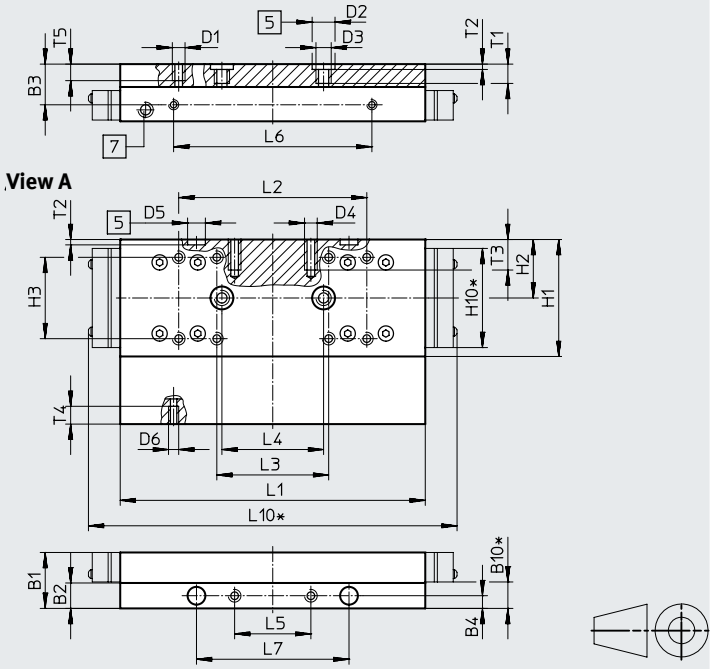

[5] Drill hole for centring sleeve
[6] Drilled hole for centring pin
[7] Lubricating hole for ball screw
M6 threaded connection, 8 mm deep
* Protected version

Size	B1	B2	B3	B4	B10*	D1	D2 ø H7	D3	D4	D5 ø H7	D6	H1	H2	H3
70	18.7	8.7	11.7	4.5	9	M5	5	–	M5	5	M4	35	17.5	20 ±0.1
80	22	10	16	5	10.4	M5	9	M6	M5	7	M4	46	23	32 ±0.2

Size	H10*	L1 ±0.1	L2	L3	L4 ±0.03	L5	L6 ±0.1	L7 ±0.05	L10*	T1	T2 +0.1	T3	T4	T5
70	29.4	100	90 ±0.1	20 ±0.1	20	10 ±0.1	56	–	121	7.5	3.1	10	6	–
80	39	120	74 ±0.2	44 ±0.2	40	30 ±0.1	78	60	145	8.6	2.1	12	7	7.5

* Protected version

Datasheet

Dimensions Download CAD data ➔ www.festo.com

GK – Standard slide / GP – Standard slide, protected

Size 120

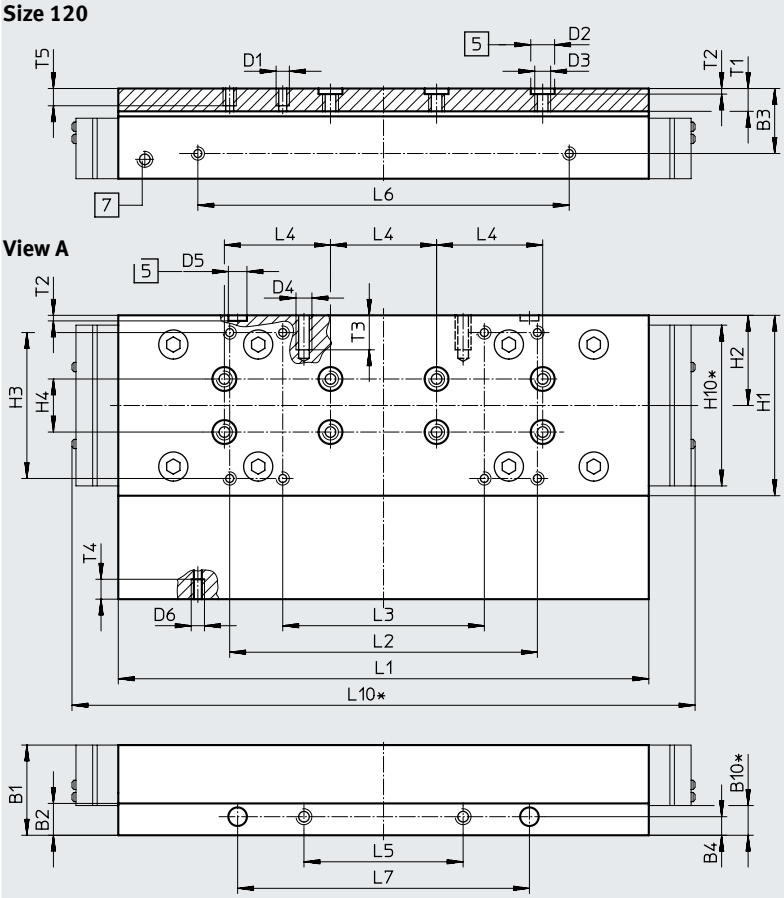

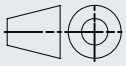

[5] Drill hole for centring sleeve
[7] Lubricating hole for ball screw M6 threaded connection, 8 mm deep
* Protected version

Size	B1	B2	B3	B4	B10*	D1	D2 ø H7	D3	D4	D5 ø H7	D6	H1	H2	H3	H4 ±0.03
120	34	12	24.5	7	11.2	M5	9	M6	M6	7	M5	68	34	55 ±0.2	20

Size	H10*	L1 ±0.1	L2 ±0.2	L3 ±0.2	L4 ±0.03	L5 ±0.1	L6 ±0.1	L7 ±0.05	L10*	T1	T2 +0.1	T3	T4	T5
120	60.6	203.3	116	76	40	60	140	110	235	8.6	2.1	13	7.5	7.5

* Protected version

Datasheet

Dimensions Download CAD data ➔ www.festo.com

GK – Standard slide

Size 185

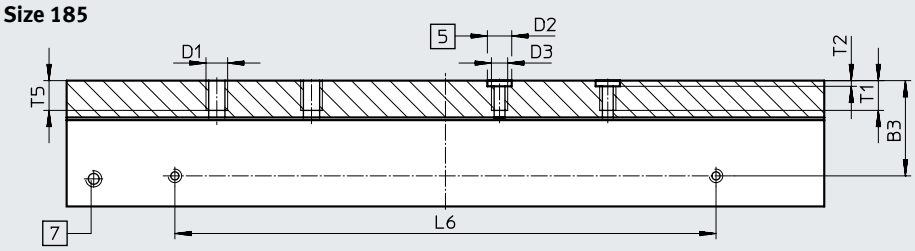

View A

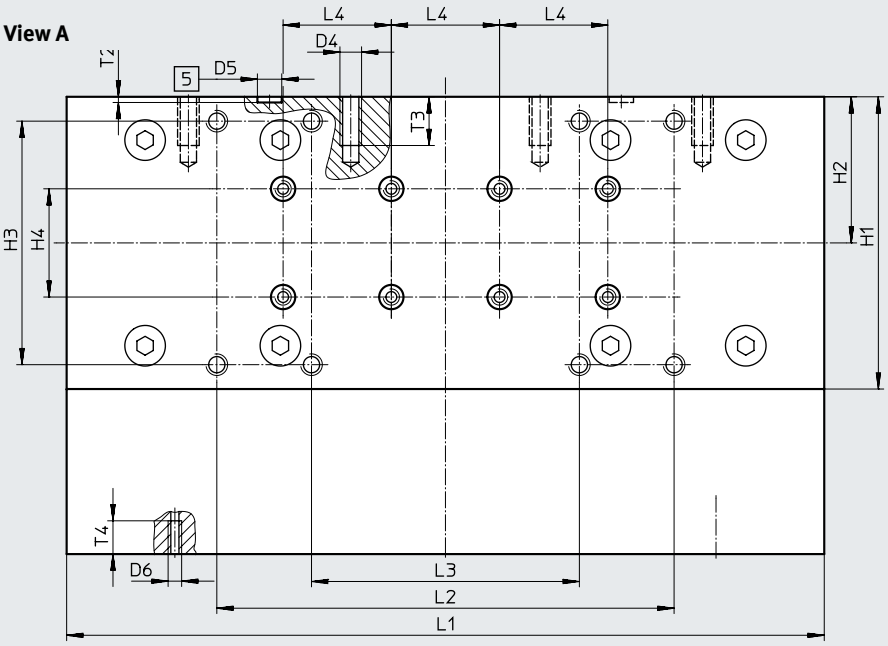

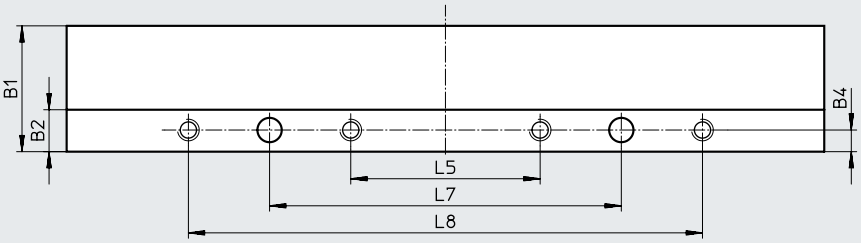

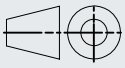

[5] Drill hole for centring sleeve
[7] Lubricating hole for ball screw M6 threaded connection, 8 mm deep

Size	B1	B2	B3	B4	D1	D2 ø H7	D3	D4	D5 ø H7	D6	H1	H2	H3 ±0.2	H4 ±0.03
185	46.5	15.5	35.2	8	M8	9	M6	M8	9	M5	108	54	90	40

Size	L1 ±0.1	L2 ±0.2	L3 ±0.2	L4 ±0.03	L5 ±0.2	L6 ±0.1	L7 ±0.05	L8 ±0.2	T1	T2 +0.1	T3	T4	T5
185	282.8	169	99	40	70	200	130	190	11	2.1	18	12.3	12

Datasheet

Dimensions Download CAD data ➔ www.festo.com

GV – Extended slide / GQ – Extended slide, protected

Size: 70

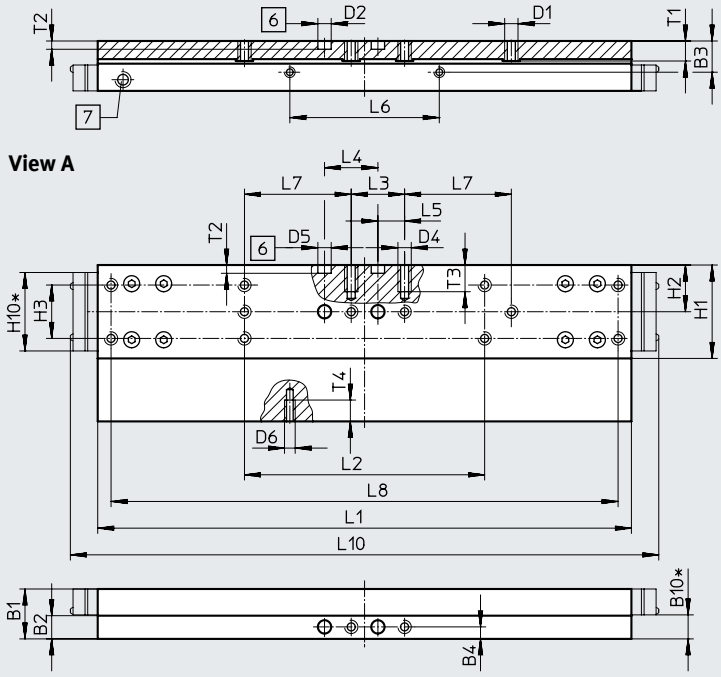

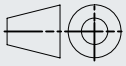

[6] Drilled hole for centring sleeve
[7] Lubricating hole for ball screw M6 threaded connection, 8 mm deep
* Protected version

Size	B1	B2	B3	B4	B10*	D1	D2 ø H7	D4	D5 ø H7
70	18.7	8.7	11.7	4.5	9	M5	5	M5	5

Size	D6	H1	H2	H3 ±0.1	H10*	L1 ±0.1	L2 ±0.1	L3 ±0.1	L4 ±0.03
70	M4	35	17.5	20	29.4	200	90	20	20

Size	L5 ±0.1	L6 ±0.1	L7 ±0.1	L8 ±0.2	L10*	T1	T2 +0.1	T3	T4
70	10	56	40	190	221	7.5	3.1	10	6

* Protected version

Datasheet

Dimensions Download CAD data ➔ www.festo.com

GV – Extended slide / GQ – Extended slide, protected

Size 80

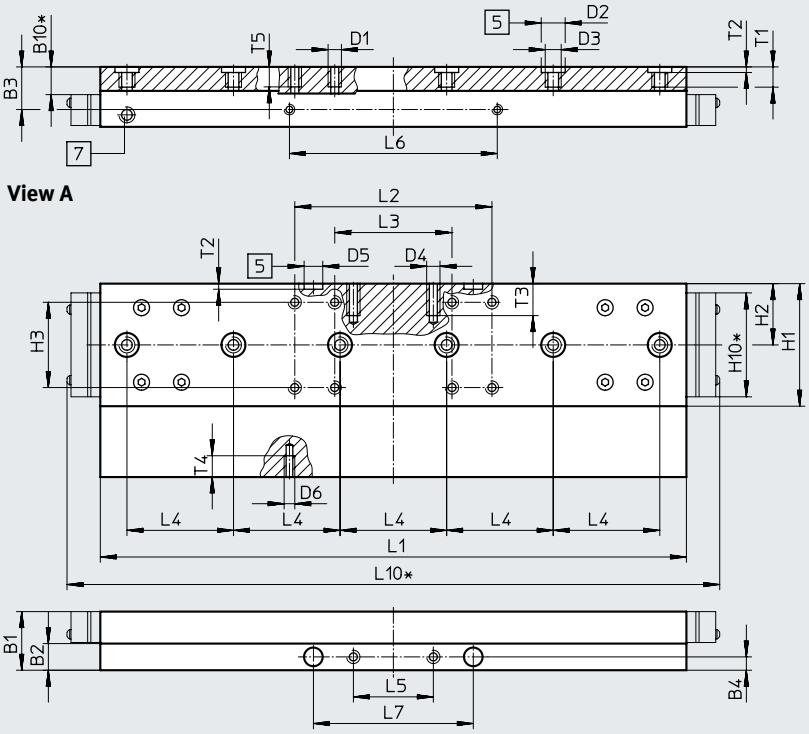

[5] Drill hole for centring sleeve

[7] Lubricating hole for ball screw M6 threaded connection, 8 mm deep

* Protected version

Size	B1	B2	B3	B4	B10*	D1	D2 ø H7	D3	D4	D5 ø H7
80	22	10	16	5	10.4	M5	9	M6	M5	7

Size	D6	H1	H2	H3 ±0.2	H10*	L1 ±0.1	L2 ±0.2	L3 ±0.2	L4 ±0.03
80	M4	46	23	32	39	220	74	44	40

Size	L5 ±0.1	L6 ±0.1	L7 ±0.05	L10*	T1	T2 +0.1	T3	T4	T5
80	30	78	60	245	8.6	2.1	12	7	7.5

* Protected version

Datasheet

Dimensions Download CAD data ➔ www.festo.com

GV – Extended slide / GQ – Extended slide, protected

Size: 120

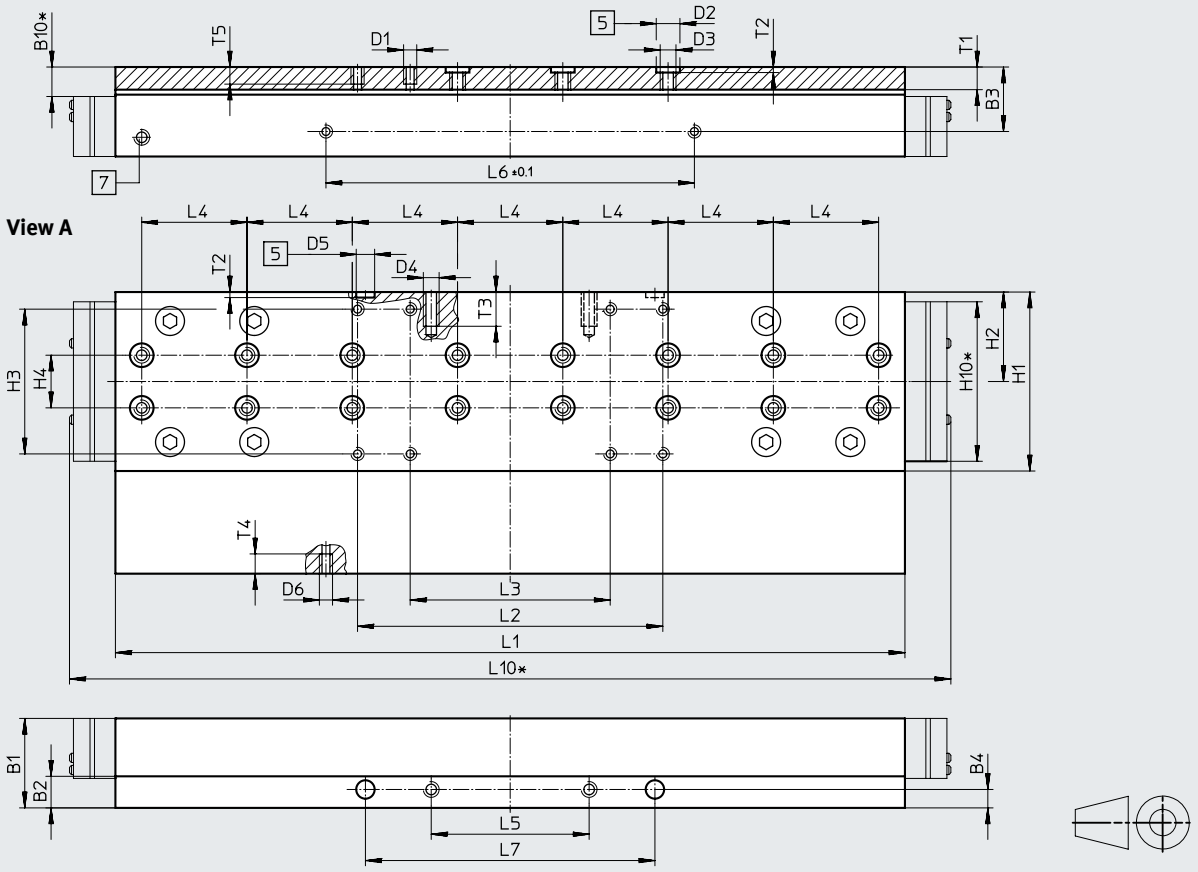

[5] Drill hole for centring sleeve
[7] Lubricating hole for ball screw
M6 threaded connection, 8 mm deep
* Protected version

Size	B1	B2	B3	B4	B10*	D1	D2 ø H7	D3	D4	D5 ø H7
120	34	12	24.5	7	11.2	M5	9	M6	M6	7

Size	D6	H1	H2	H3	H4 ±0.03	H10*	L1 ±0.1	L2	L3	L4 ±0.03
120	M5	68	34	55 ±0.2	20	60.6	303.3	116 ±0.2	76 ±0.2	40

Size	L5 ±0.1	L6 ±0.1	L7	L8 ±0.2	L10*	T1	T2 ±0.1	T3	T4	T5
120	60	140	110±0.05	–	335	8.6	2.1	13	7.5	7.5

* Protected version

Datasheet

Dimensions Download CAD data ➔ www.festo.com

GV – Extended slide

Size 185

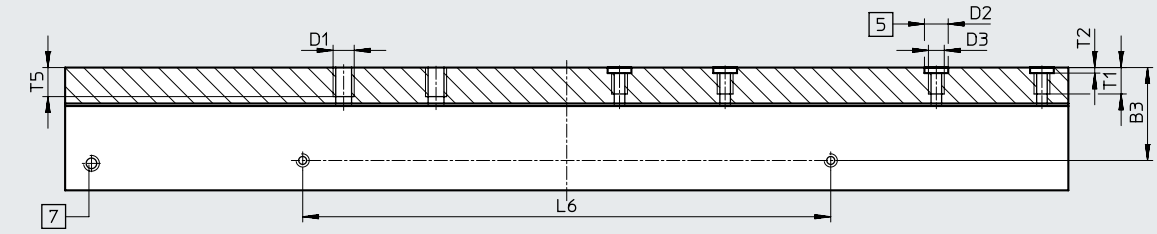

View A

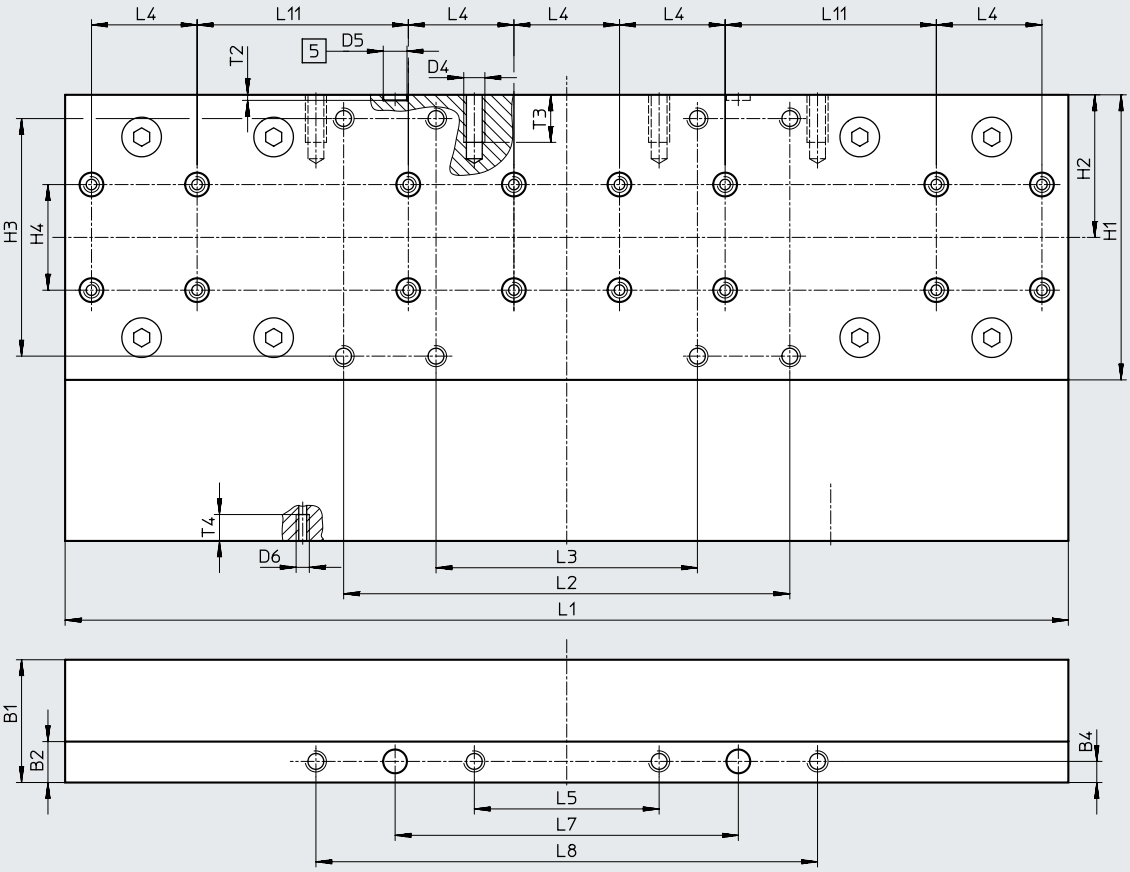

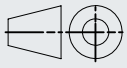

[5] Drill hole for centring sleeve
[7] Lubricating hole for ball screw
M6 threaded connection, 8 mm deep

Size	B1	B2	B3	B4	D1	D2 ø H7	D3	D4	D5 ø H7
185	46.5	15.5	35.2	8	M8	9	M6	M8	9

Size	D6	H1	H2	H3 ±0.2	H4 ±0.03	L1 ±0.1	L2 ±0.2	L3 ±0.2	L4 ±0.03
185	M5	108	54	90	40	382.8	169	99	40

Size	L5 ±0.2	L6 ±0.1	L7 ±0.05	L8 ±0.2	L11 ±0.03	T1	T2 +0.1	T3	T4	T5
185	70	200	130	190	80	11	2.1	18	10	12

Datasheet

Dimensions Download CAD data ➔ www.festo.com

GK-C – Standard slide with lubrication adapter

Size 70

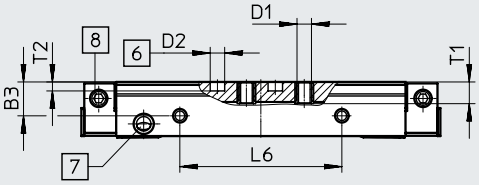

View A

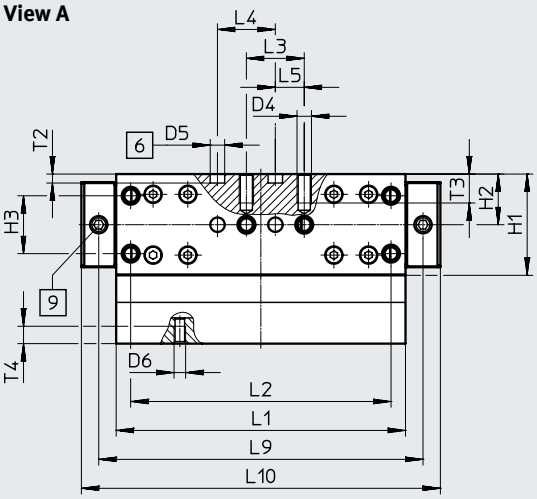

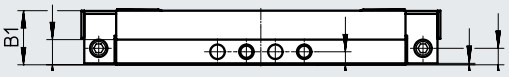

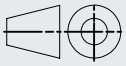

[6] Drilled hole for centring pin
[7] Lubricating hole for ball screw
M6 threaded connection, 8 mm deep
[8] Lubricating hole for lubrication adapter
M6 threaded connection, 6 mm deep
[9] Lubricating hole for lubrication adapter
M6 threaded connection, 5.5 mm deep

Size	B1	B2	B3	B4	B5	B6	D1	D2 ø H7	D4
70	18.7	8.7	11.7	4.5	0.5	5.7	M5	5	M5

Size	D5 ø H7	D6	H1	H2	H3 ±0.1	L1 ±0.1	L2 ±0.1	L3 ±0.1	L4 ±0.03
70	5	M4	35	17.5	20	100	90	20	20

Size	L5	L6 ±0.1	L9	L10	L11	T1	T2 +0.1	T3	T4
70	10	56	112.1	124.1	30	7.5	3.1	10	6

Datasheet

Dimensions Download CAD data ➔ www.festo.com

GK-C – Standard slide with lubrication adapter

Size 80

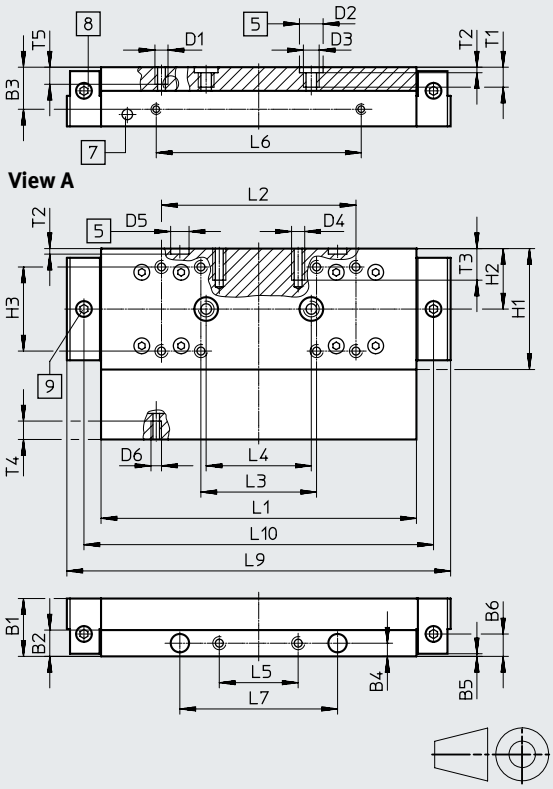

Size 120

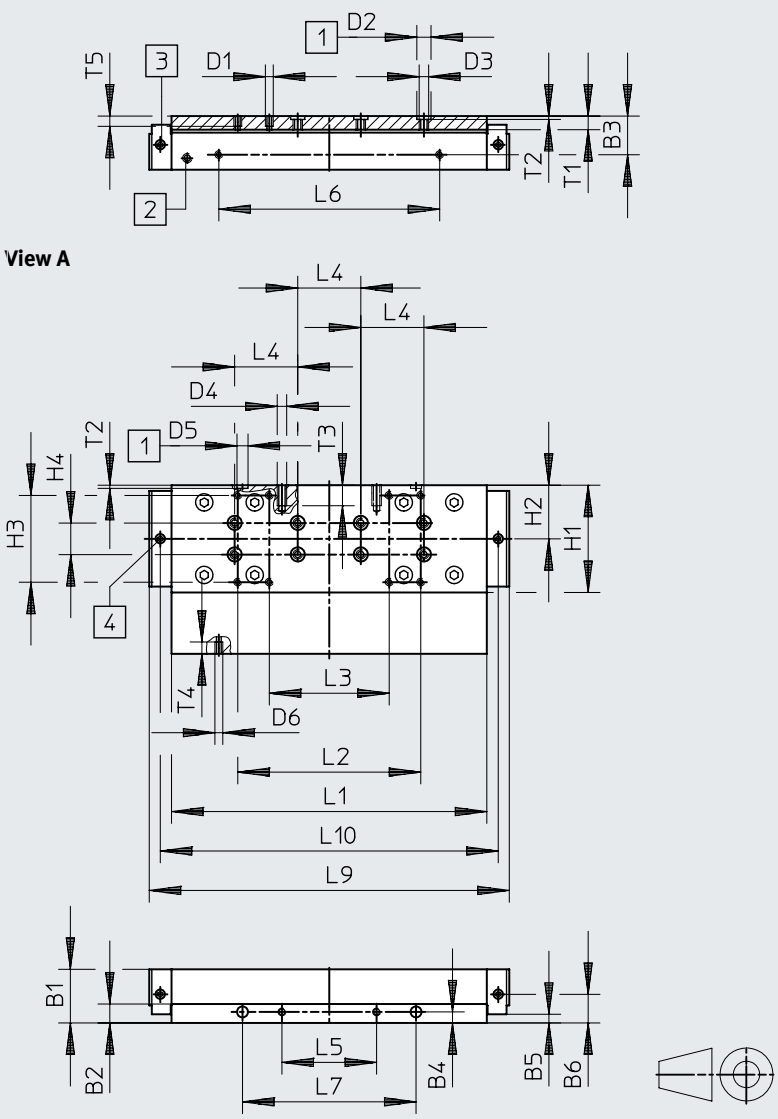

[1/5] Drill hole for centring sleeve

[2/7] Lubricating hole for ball screw
M6 threaded connection, 8 mm deep

[3/8] Lubricating hole for lubrication adapter
M6 threaded connection, 6 mm deep

[4/9] Lubricating hole for lubrication adapter
M6 threaded connection, 5.5 mm deep

Size	B1	B2	B3	B4	B5 ±0.1	B6	D1	D2 ø H7	D3	D4
80	22	10	16	5	1	8.5	M5	9	M6	M5
120	34	12	24.5	7	5.5	13.9	M5	9	M6	M6

Size	D5 ø H7	D6	H1	H2	H3 ±0.2	H4 ±0.03	L1 ±0.1	L2 ±0.2	L3 ±0.2	L4 ±0.03
80	7	M4	46	23	32	–	120	74	44	40
120	7	M5	68	34	55	20	203.3	116	76	40

Size	L5 ±0.1	L6 ±0.1	L7 ±0.05	L9	L10	T1	T2 +0.1	T3	T4	T5
80	30	78	60	146	133	8.6	2.1	12	7	7.5
120	60	140	110	228.3	214.3	8.6	2.1	13	7.5	7.5

Datasheet

Dimensions Download CAD data ➔ www.festo.com

GK-C – Standard slide with lubrication adapter

Size 185

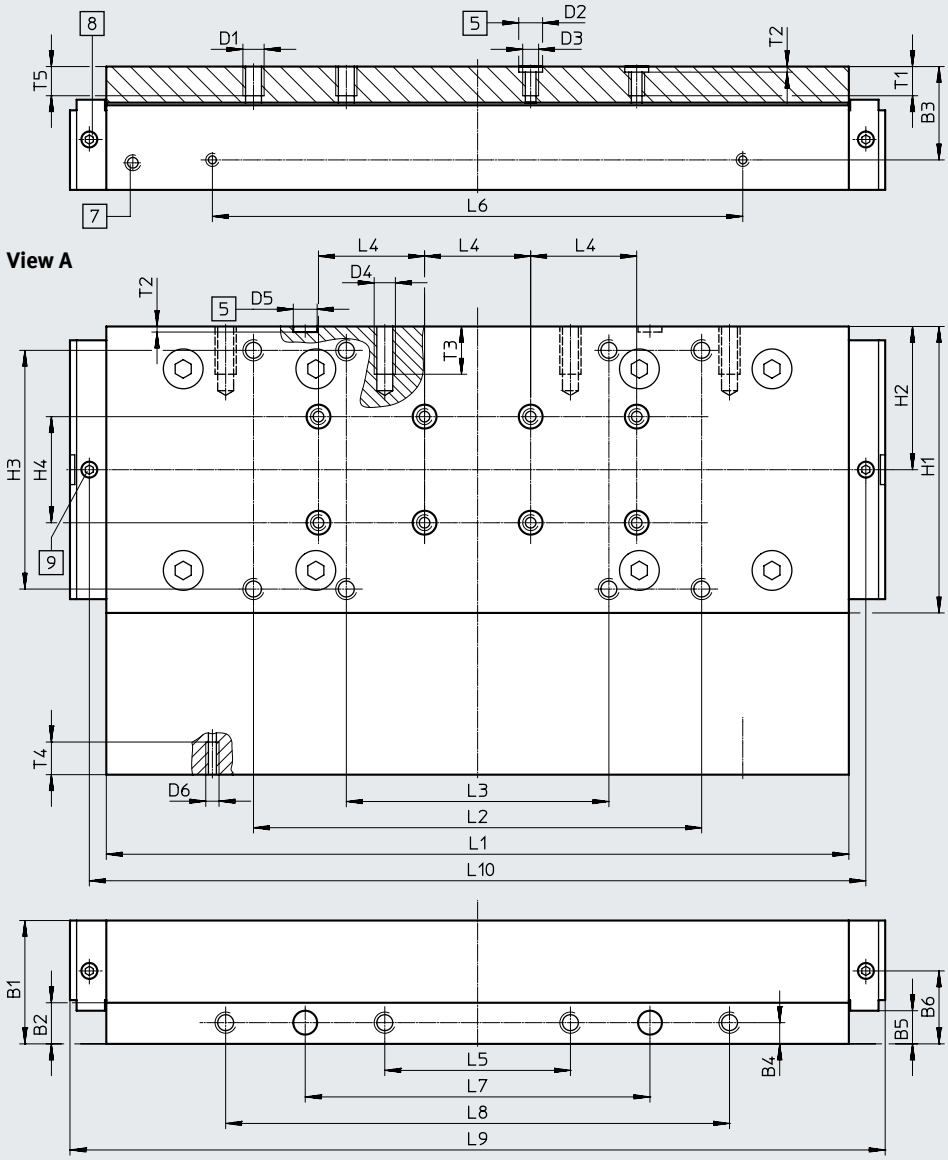

[5] Drill hole for centring sleeve
[7] Lubricating hole for ball screw M6 threaded connection, 8 mm deep
[8] Lubricating hole for lubrication adapter M6 threaded connection, 6 mm deep
[9] Lubricating hole for lubrication adapter M6 threaded connection, 5.5 mm deep

Size	B1	B2	B3	B4	B5 ±0.1	B6	D1	D2 ø H7	D3	D4
185	46.5	15.5	35.2	8	12.5	27.5	M8	9	M6	M8

Size	D5 ø H7	D6	H1	H2	H3 ±0.2	H4 ±0.03	L1 ±0.1	L2 ±0.2	L3 ±0.2	L4 ±0.03
185	9	M5	108	54	90	40	282.8	169	99	40

Size	L5 ±0.2	L6 ±0.1	L7 ±0.05	L8 ±0.2	L9	L10	T1	T2 +0.1	T3	T4	T5
185	70	200	130	190	307.4	292.8	11	2.1	18	12.3	12

Datasheet

Dimensions Download CAD data ➔ www.festo.com

GV-C – Extended slide with lubrication adapter

Size 70

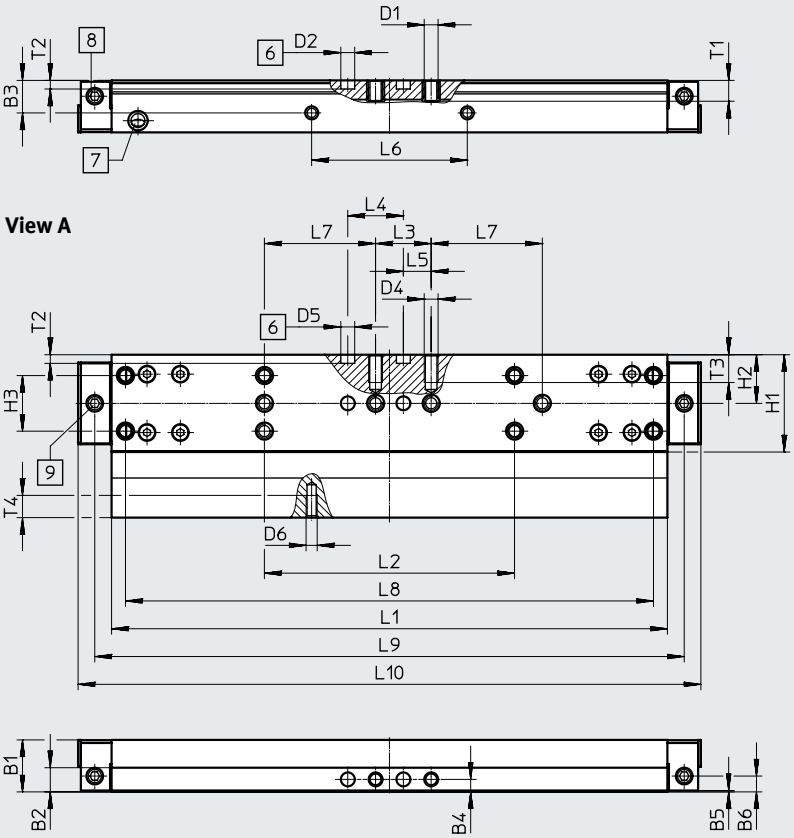

[6] Drilled hole for centring pin
[7] Lubricating hole for ball screw M6 threaded connection, 8 mm deep
[8] Lubricating hole for lubrication adapter M6 threaded connection, 6 mm deep
[9] Lubricating hole for lubrication adapter M6 threaded connection, 5.5 mm deep

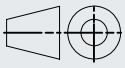

Size	B1	B2	B3	B4	B5	B6	D1	D2 ø H7	D4	D5 ø H7
70	18.7	8.7	11.7	4.5	0.5	5.7	M5	5	M5	5

Size	D6	H1	H2	H3 ±0.1	L1 ±0.1	L2 ±0.1	L3 ±0.1	L4 ±0.03	L5	L6 ±0.1
70	M4	35	17.5	20	200	90	20	20	10	56

Size	L7 ±0.1	L8 ±0.2	L9	L10	L11	T1	T2 +0.1	T3	T4
70	40	190	212.1	224.1	30	7.5	3.1	10	6

Datasheet

Dimensions Download CAD data ➔ www.festo.com

GV-C – Extended slide with lubrication adapter

Size 80

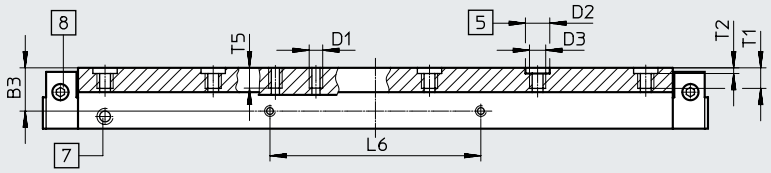

View A

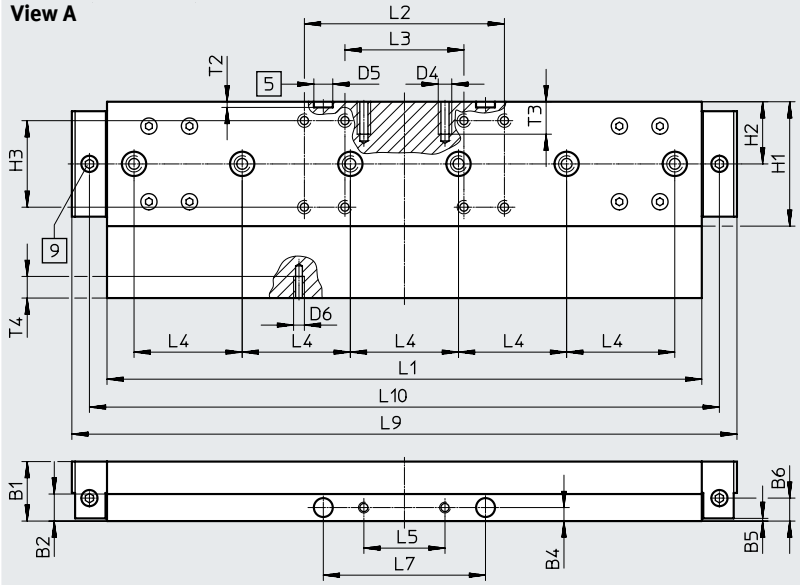

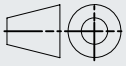

[5] Drill hole for centring sleeve
[7] Lubricating hole for ball screw M6 threaded connection, 8 mm deep
[8] Lubricating hole for lubrication adapter M6 threaded connection, 6 mm deep
[9] Lubricating hole for lubrication adapter M6 threaded connection, 5.5 mm deep

Size	B1	B2	B3	B4	B5 ±0.1	B6	D1	D2 ø H7	D3	D4
80	22	10	16	5	1	8.5	M5	9	M6	M5

Size	D5 ø H7	D6	H1	H2	H3 ±0.2	L1 ±0.1	L2 ±0.2	L3 ±0.2	L4 ±0.03	L5 ±0.1
80	7	M4	46	23	32	220	74	44	40	30

Size	L6 ±0.1	L7 ±0.05	L9	L10	T1	T2 +0.1	T3	T4	T5
80	78	60	246	233	8.6	2.1	12	7	7.5

Datasheet

Dimensions Download CAD data ➔ www.festo.com

GV-C – Extended slide with lubrication adapter

Size 120

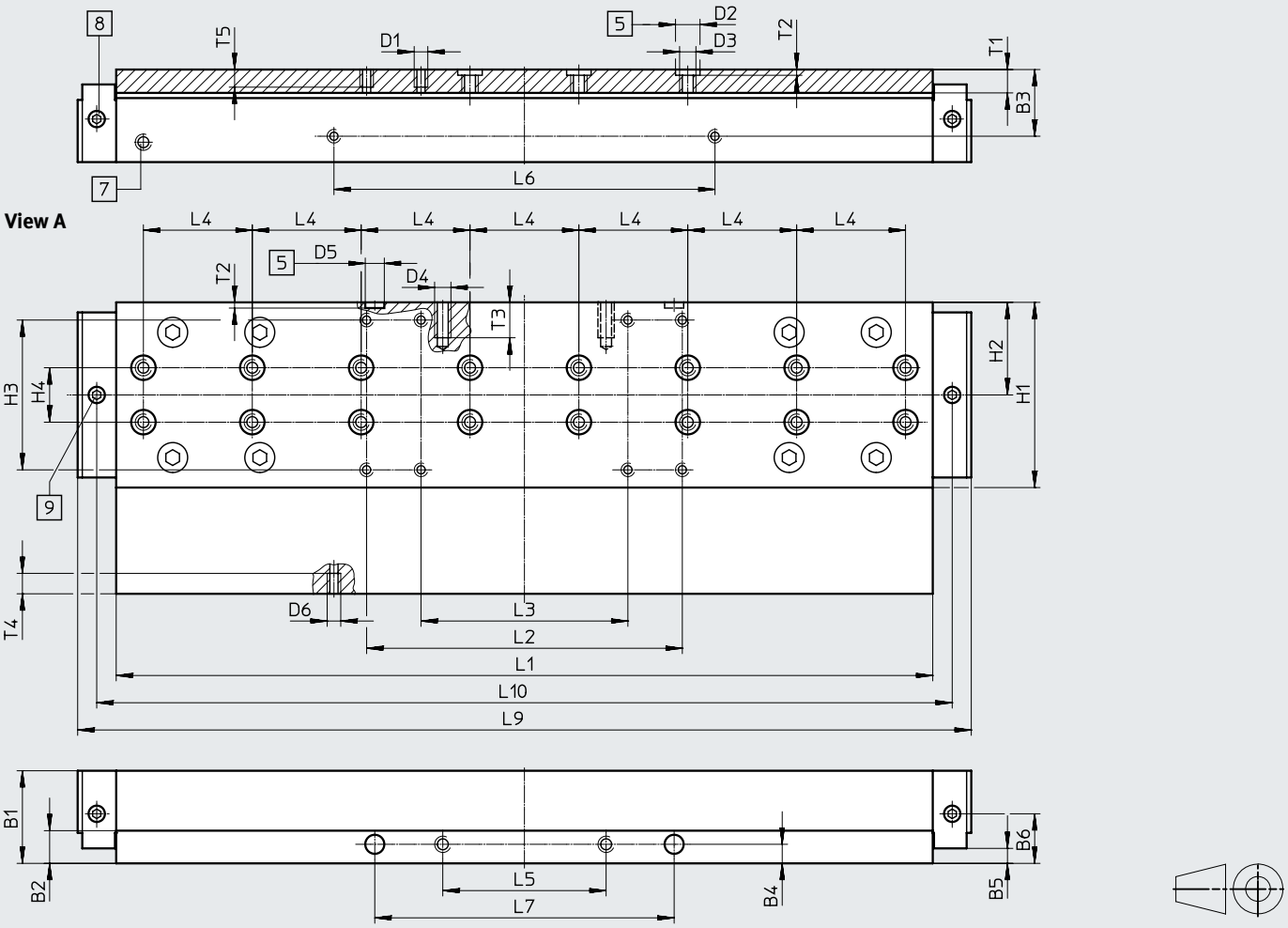

[5] Drill hole for centring sleeve
[7] Lubricating hole for ball screw
M6 threaded connection, 8 mm deep
[8] Lubricating hole for lubrication adapter
M6 threaded connection, 6 mm deep
[9] Lubricating hole for lubrication adapter
M6 threaded connection, 5.5 mm deep

Size	B1	B2	B3	B4	B5 ±0.1	B6	D1	D2 ø H7	D3	D4
120	34	12	24.5	7	5.5	13.9	M5	9	M6	M6

Size	D5 ø H7	D6	H1	H2	H3 ±0.2	H4 ±0.03	L1 ±0.1	L2 ±0.2	L3 ±0.2	L4 ±0.03
120	7	M5	68	34	55	20	303.3	116	76	40

Size	L5 ±0.1	L6 ±0.1	L7 ±0.05	L9	L10	T1	T2 +0.1	T3	T4	T5
120	60	140	110	328.3	314.3	8.6	2.1	13	7.5	7.5

Datasheet

Dimensions Download CAD data ➔ www.festo.com

GV-C – Extended slide with lubrication adapter

Size 185

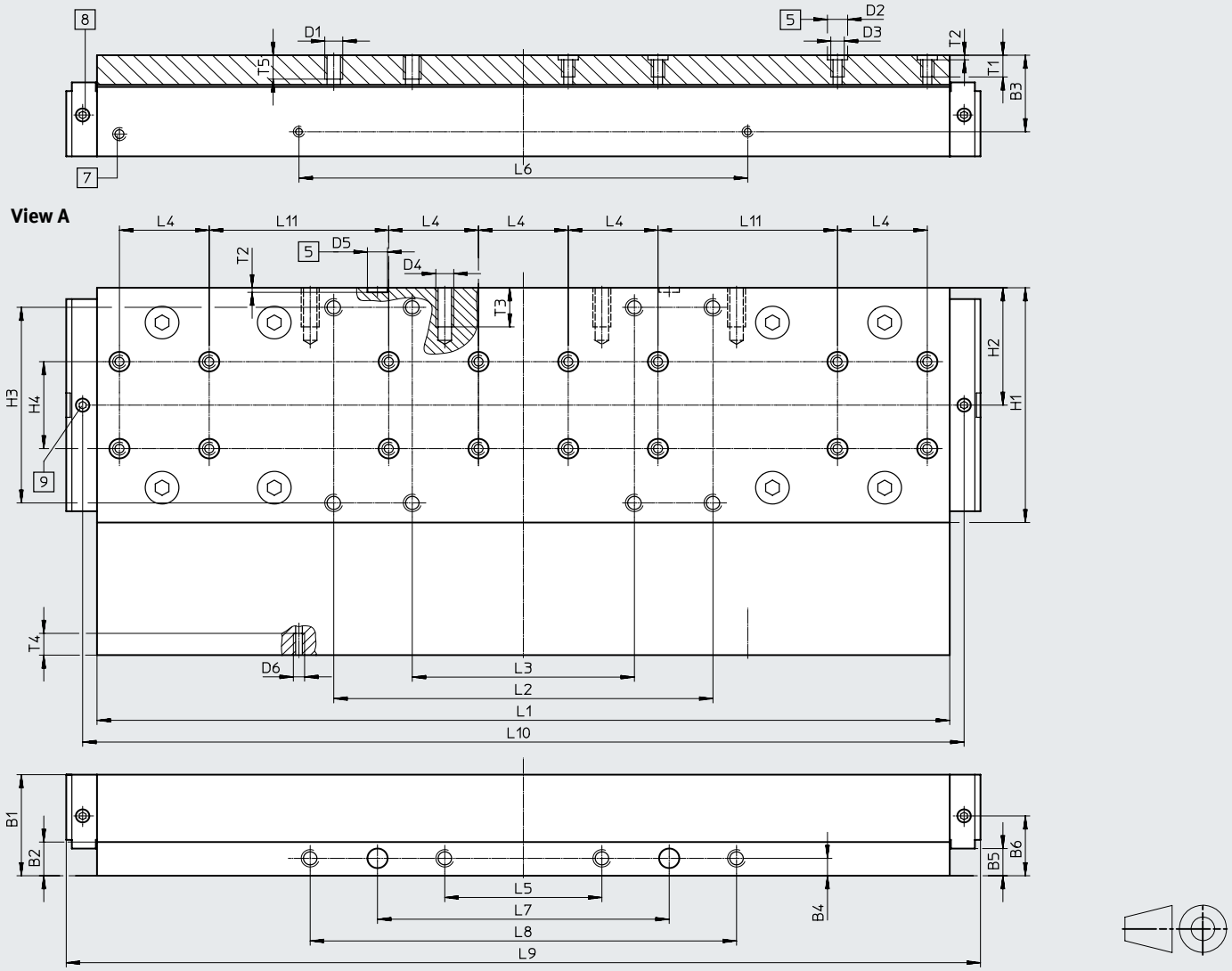

[5] Drill hole for centring sleeve
[7] Lubricating hole for ball screw M6 threaded connection, 8 mm deep
[8] Lubricating hole for lubrication adapter M6 threaded connection, 6 mm deep
[9] Lubricating hole for lubrication adapter M6 threaded connection, 5.5 mm deep

Size	B1	B2	B3	B4	B5 ±0.1	B6	D1	D2 Ø H7	D3	D4
185	46.5	15.5	35.2	8	12.5	27.5	M8	9	M6	M8

Size	D5 Ø H7	D6	H1	H2	H3 ±0.2	H4 ±0.03	L1 ±0.1	L2 ±0.2	L3 ±0.2	L4 ±0.03	L5 ±0.2
185	9	M5	108	54	90	40	382.8	169	99	40	70

Size	L6 ±0.1	L7 ±0.05	L8 ±0.2	L9	L10	L11 ±0.03	T1	T2 +0.1	T3	T4	T5
185	200	130	190	407.4	392.8	80	11	2.1	18	10	12

Datasheet

Dimensions Download CAD data ➔ www.festo.com

M1/M2 – With incremental displacement encoder

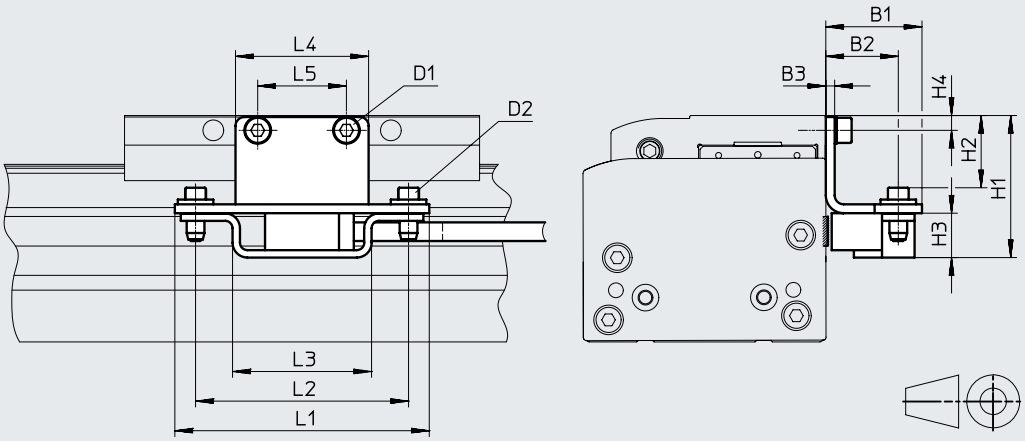

Encoder cable (connection to the motor controller/safety system)
➔ page 59

Type	B1	B2	B3	H1	H2	H3	H4
EGC-70-...-M1	32.5	24.5	3	39	18.4	15	4.5
EGC-70-...-M2				39	18.4		4.5
EGC-80-...-M1				48	24.4		5
EGC-80-...-M2				48	24.4		5
EGC-120-...-M1				60	36.4		7
EGC-120-...-M2				60	36.4		7
EGC-185-...-M1				78.5	54.9		8
EGC-185-...-M2				78.5	54.9		8

Type	D1	D2	L1	L2	L3	L4	L5
EGC-70-...-M1	M5x8	M4x14	86	72	47	35	20
EGC-70-...-M2	M5x8					35	20
EGC-80-...-M1	M5x8					45	30
EGC-80-...-M2	M5x8					45	30
EGC-120-...-M1	M6x10					86	60
EGC-120-...-M2	M6x10					86	60
EGC-185-...-M1	M8x12					86	70
EGC-185-...-M2	M8x12					86	70

Datasheet

Dimensions Download CAD data ➔ www.festo.com

1HL/1HR/2H – With clamping unit

Size 80

1-channel, left

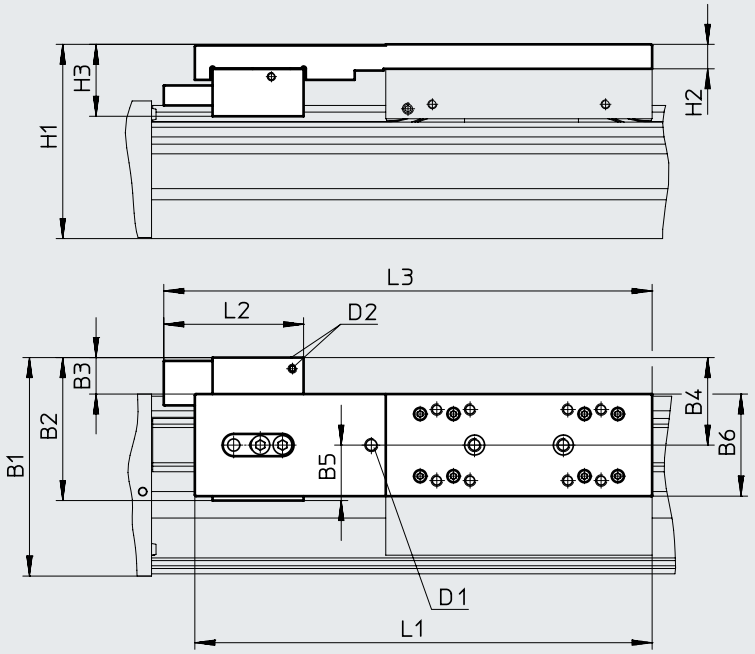

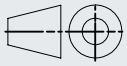

1-channel, right

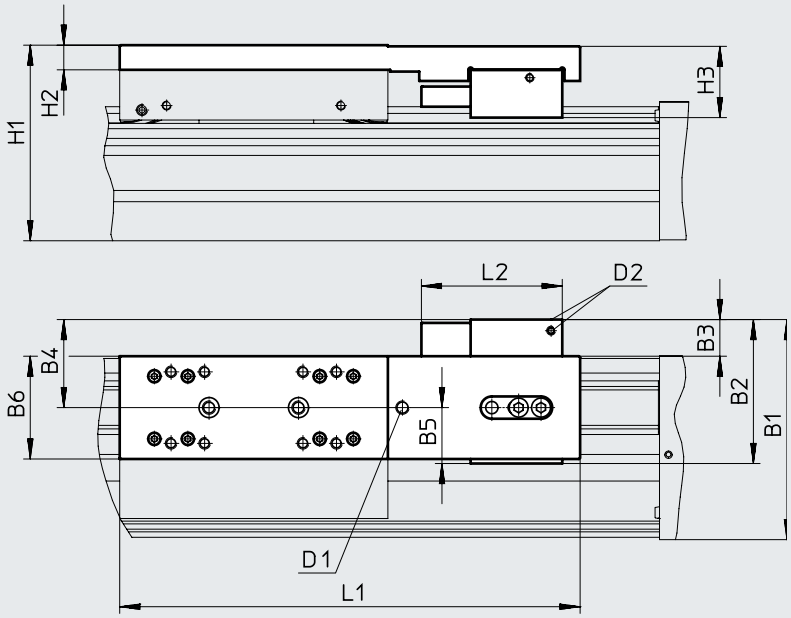

D1 Optional: threaded connection for lubrication adapter

D2 Compressed air supply ports

Working stroke reduction in combination with clamping unit ➔ page 22

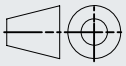

Datasheet

Dimensions Download CAD data ➔ www.festo.com

1HL/1HR/2H – With clamping unit

Size 80

2-channel

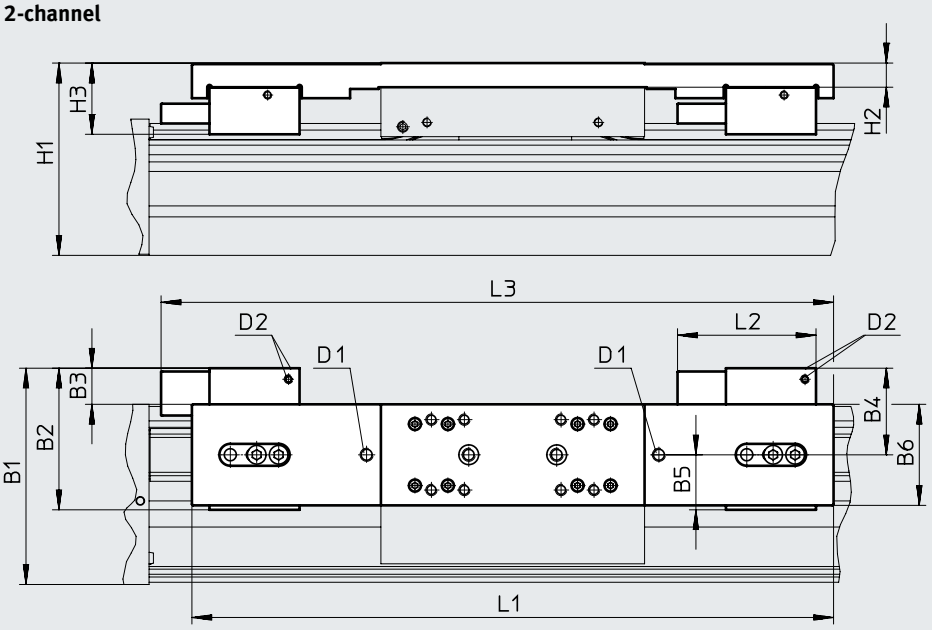

D1 Optional: threaded connection for lubrication adapter
D2 Compressed air supply ports

Working stroke reduction in combination with clamping unit ➔ page 22

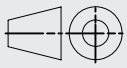

Type	B1	B2	B3	B4	B5	B6	H1	H2	H3	D1	D2	L1	L2	L3
EGC-80-...-1HL-PN	98.4	64.4	17.4	39.4	25	46	87.5	11	32.4	M6	M5	206	63	220
EGC-80-...-1HR-PN														–
EGC-80-...-C-1HL-PN														220
EGC-80-...-C-1HR-PN														–
EGC-80-...-2H-PN												292		306
EGC-80-...-C-2H-PN														

Datasheet

Dimensions Download CAD data ➔ www.festo.com

1HL/1HR/2H – With clamping unit

Size 120/185

1-channel, left

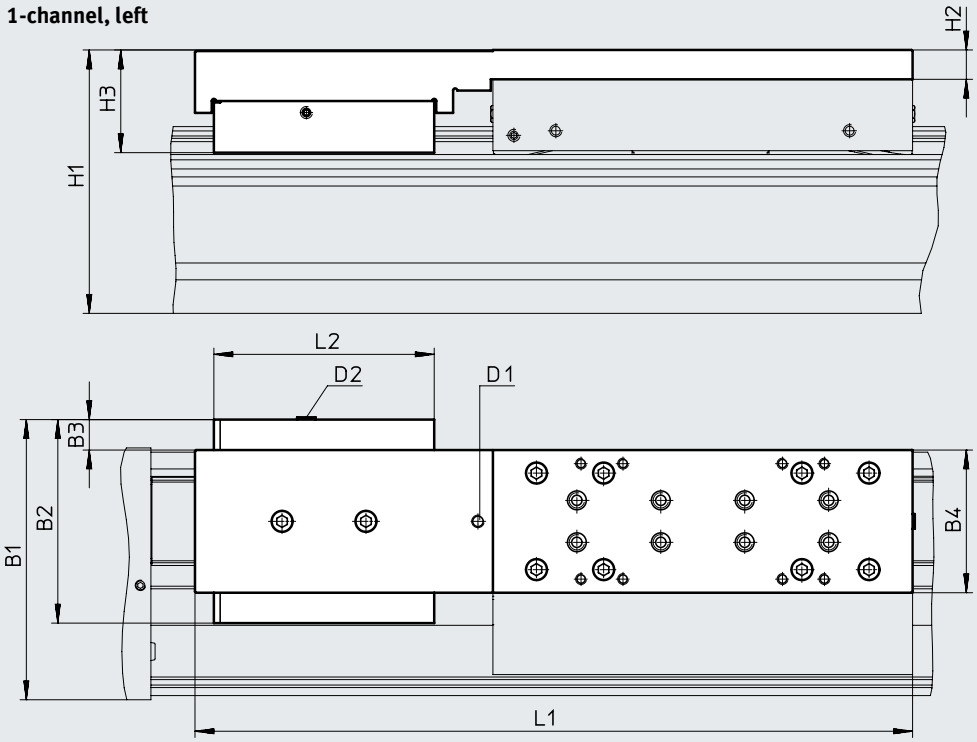

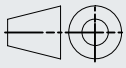

1-channel, right

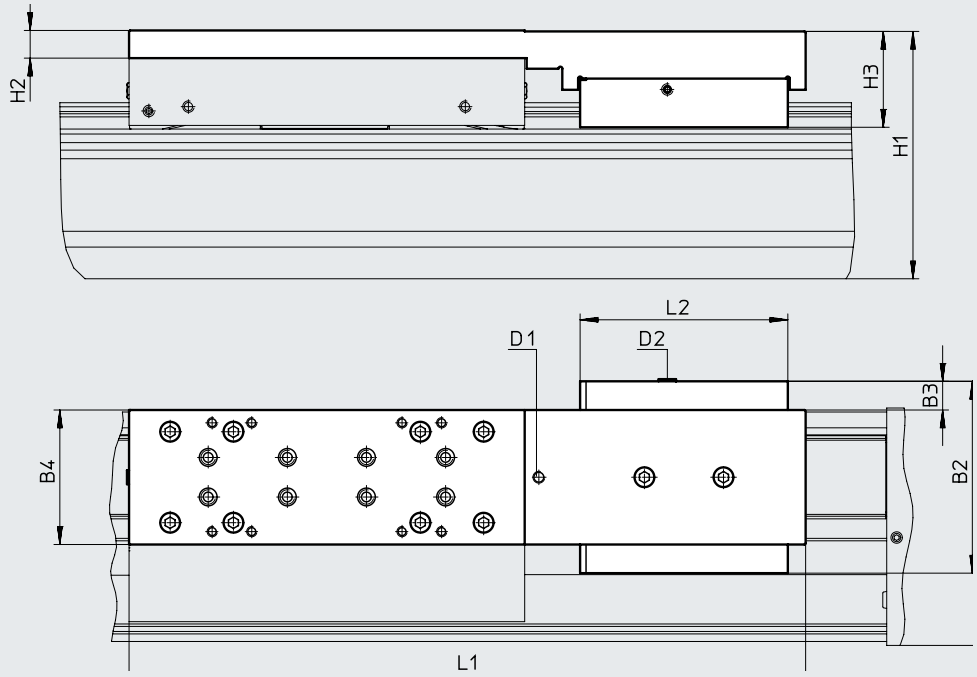

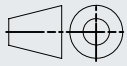

D1 Optional: threaded connection for lubrication adapter

D2 Compressed air supply ports

Working stroke reduction in combination with clamping unit ➔ page 22

Datasheet

Dimensions Download CAD data ➔ www.festo.com

1HL/1HR/2H – With clamping unit

Size 120/185

2-channel

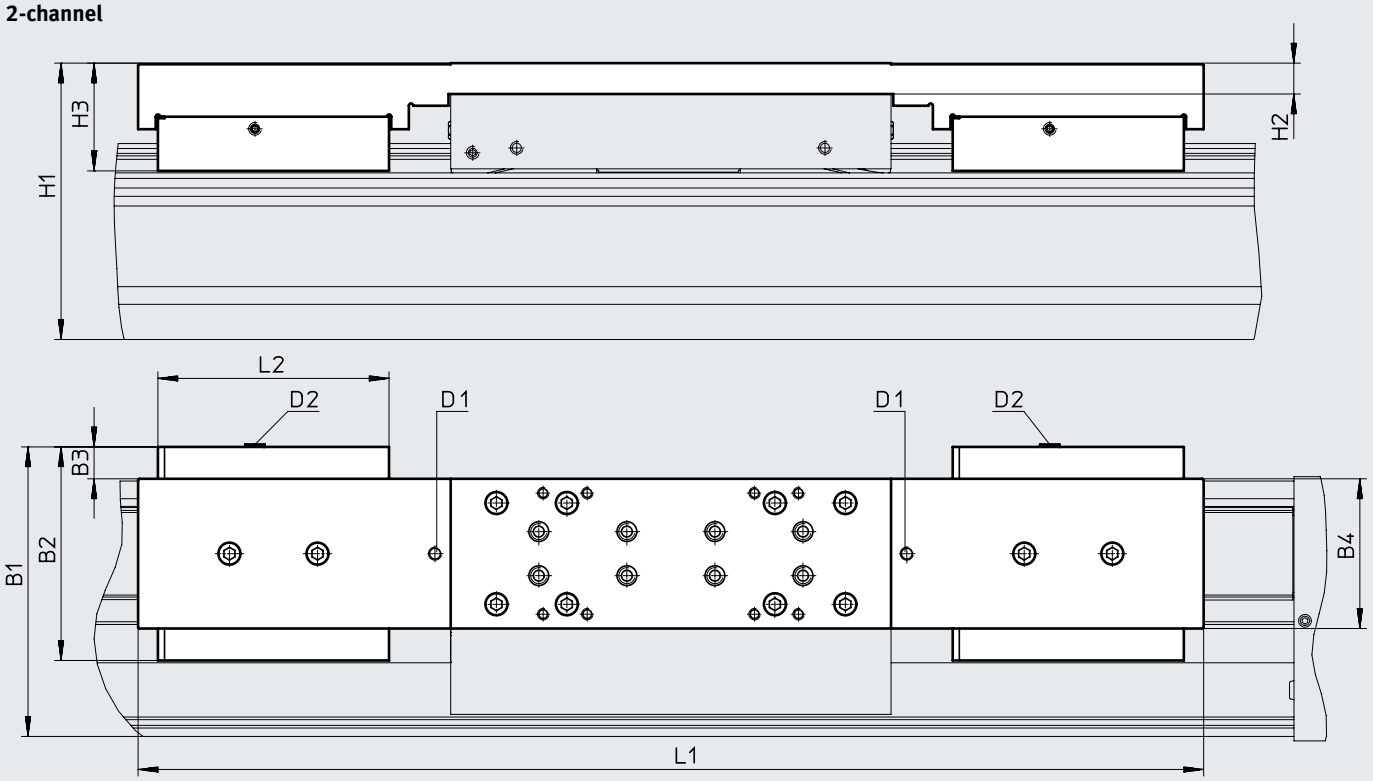

D1 Optional: threaded connection for lubrication adapter
D2 Compressed air supply ports

Working stroke reduction in combination with clamping unit ➔ page 22

Type	B1	B2	B3	B4	H1	H2	H3	D1	D2	L1	L2
Size: 120											
EGC-120-...-1HL-PN	133.5	97	15.5	68	125.5	14	48.9	M6	M5	342	105
EGC-120-...-1HR-PN											
EGC-120-...-C-1HL-PN											
EGC-120-...-C-1HR-PN											
EGC-120-...-2H-PN										484	
EGC-120-...-C-2H-PN											
Size: 185											
EGC-185-...-1HL-PN	196.5	131	12.5	108	189.5	17	64.1	M6	M5	432	109
EGC-185-...-1HR-PN											
EGC-185-...-C-1HL-PN											
EGC-185-...-C-1HR-PN											
EGC-185-...-2H-PN										584	
EGC-185-...-C-2H-PN											

Datasheet

Ordering data

Key features:
- Stroke reserve: 0 mm
- Motor attachment position: left
- Standard slide

Size	Stroke [mm]	Part no.	Type
70	**Screw pitch 10 mm/rev**		
	100	**3013388**	**EGC-70-100-BS-10P-KF-0H-ML-GK**
	200	**3013389**	**EGC-70-200-BS-10P-KF-0H-ML-GK**
	300	**3013390**	**EGC-70-300-BS-10P-KF-0H-ML-GK**
	400	**3013391**	**EGC-70-400-BS-10P-KF-0H-ML-GK**
	500	**3013392**	**EGC-70-500-BS-10P-KF-0H-ML-GK**
	600	**3013393**	**EGC-70-600-BS-10P-KF-0H-ML-GK**
80	**Screw pitch 10 mm/rev**		
	100	**3013532**	**EGC-80-100-BS-10P-KF-0H-ML-GK**
	200	**3013533**	**EGC-80-200-BS-10P-KF-0H-ML-GK**
	300	**3013534**	**EGC-80-300-BS-10P-KF-0H-ML-GK**
	400	**3013535**	**EGC-80-400-BS-10P-KF-0H-ML-GK**
	500	**3013536**	**EGC-80-500-BS-10P-KF-0H-ML-GK**
	600	**3013537**	**EGC-80-600-BS-10P-KF-0H-ML-GK**
	800	**3013538**	**EGC-80-800-BS-10P-KF-0H-ML-GK**
	Screw pitch 20 mm/rev		
	100	**3013539**	**EGC-80-100-BS-20P-KF-0H-ML-GK**
	200	**3013540**	**EGC-80-200-BS-20P-KF-0H-ML-GK**
	300	**3013541**	**EGC-80-300-BS-20P-KF-0H-ML-GK**
	400	**3013542**	**EGC-80-400-BS-20P-KF-0H-ML-GK**
	500	**3013543**	**EGC-80-500-BS-20P-KF-0H-ML-GK**
	600	**3013544**	**EGC-80-600-BS-20P-KF-0H-ML-GK**
	800	**3013545**	**EGC-80-800-BS-20P-KF-0H-ML-GK**
120	**Screw pitch 10 mm/rev**		
	100	**3013571**	**EGC-120-100-BS-10P-KF-0H-ML-GK**
	200	**3013572**	**EGC-120-200-BS-10P-KF-0H-ML-GK**
	300	**3013573**	**EGC-120-300-BS-10P-KF-0H-ML-GK**
	400	**3013574**	**EGC-120-400-BS-10P-KF-0H-ML-GK**
	500	**3013575**	**EGC-120-500-BS-10P-KF-0H-ML-GK**
	600	**3013576**	**EGC-120-600-BS-10P-KF-0H-ML-GK**
	800	**3013577**	**EGC-120-800-BS-10P-KF-0H-ML-GK**
	Screw pitch 25 mm/rev		
	100	**3013578**	**EGC-120-100-BS-25P-KF-0H-ML-GK**
	200	**3013579**	**EGC-120-200-BS-25P-KF-0H-ML-GK**
	300	**3013580**	**EGC-120-300-BS-25P-KF-0H-ML-GK**
	400	**3013581**	**EGC-120-400-BS-25P-KF-0H-ML-GK**
	500	**3013582**	**EGC-120-500-BS-25P-KF-0H-ML-GK**
	600	**3013583**	**EGC-120-600-BS-25P-KF-0H-ML-GK**
	800	**3013584**	**EGC-120-800-BS-25P-KF-0H-ML-GK**

Ordering data – Modular product system

Orientation guide

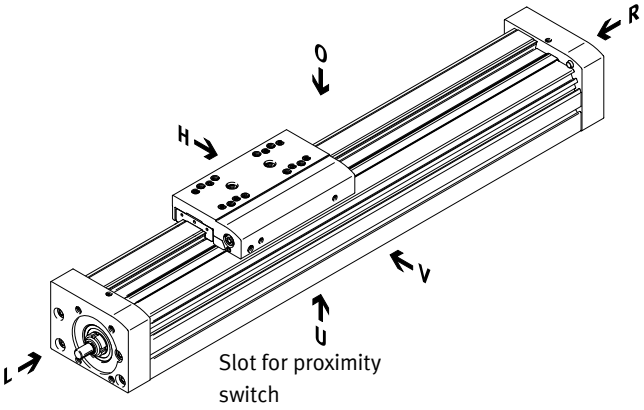

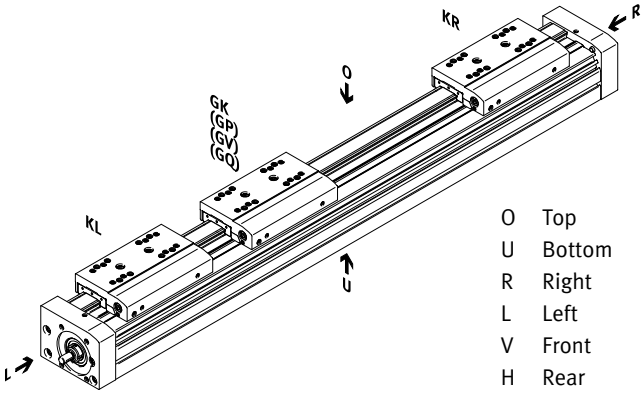

O	Top
U	Bottom
R	Right
L	Left
V	Front
H	Rear

Accessories

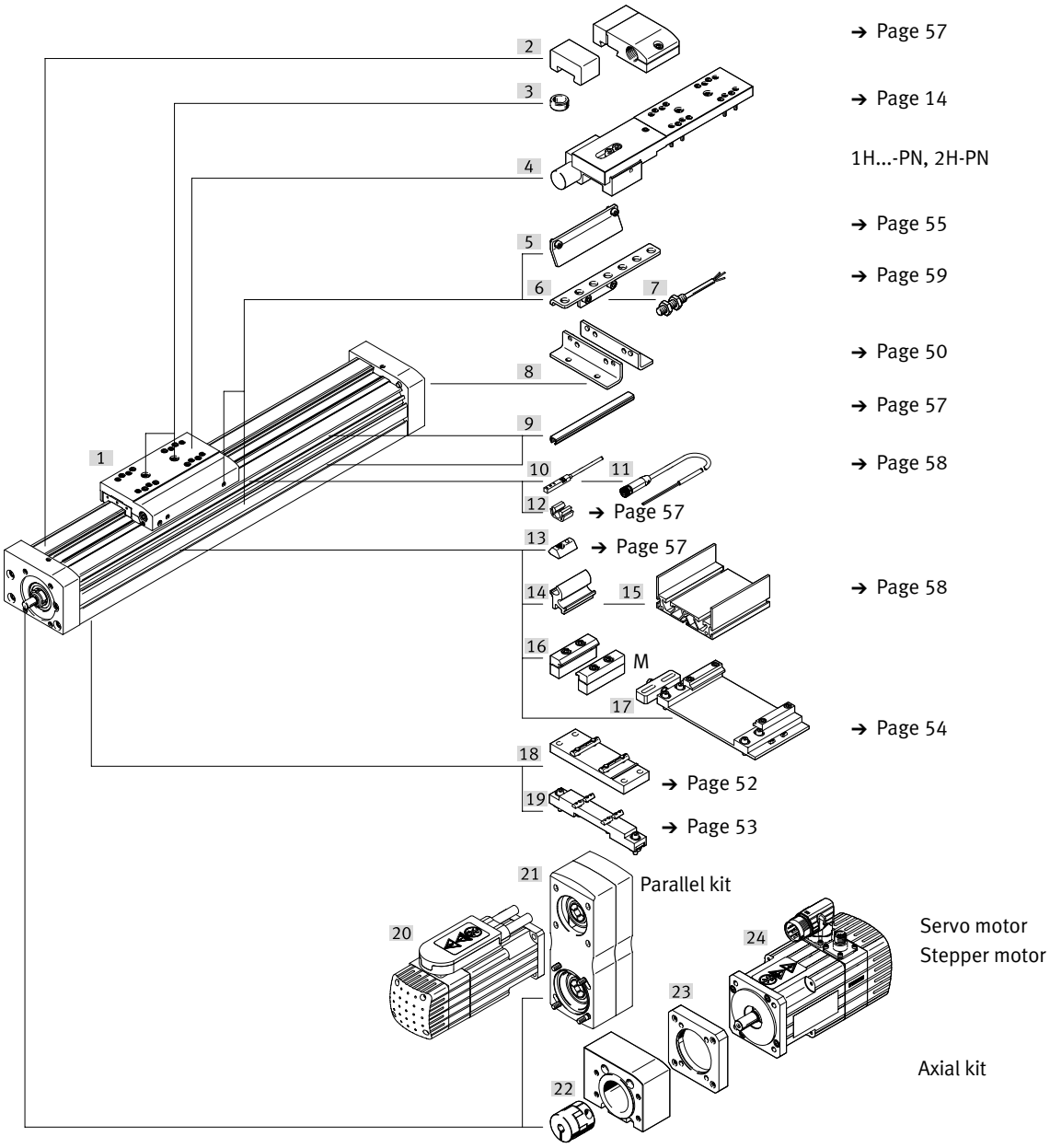

2	→ Page 57
3	→ Page 14
4	1H...-PN, 2H-PN
5	→ Page 55
6, 7	→ Page 59
8	→ Page 50
9	→ Page 57
10, 11	→ Page 58
12	→ Page 57
13	→ Page 57
14, 15	→ Page 58
16, M, 17	→ Page 54
18	→ Page 52
19	→ Page 53
20, 21, 22, 23, 24	

Ordering data – Modular product system

Ordering table								
Size		70	80	120	185	Conditions	Code	Enter code
Module no.		**556807**	**556808**	**556809**	**556811**			
Design		Linear axis					**EGC**	EGC
Size		70	80	120	185		**-...**	
Stroke length for GK, GP (without stroke reserve)	Standard [mm]	100, 200, 300, 400, 500, 600, 700, 800, 1000	100, 200, 300, 400, 500, 600, 700, 800, 900, 1000, 1400, 1500, 1800, 2000	100, 200, 300, 400, 500, 600, 700, 800, 900, 1000, 1400, 1500, 2000, 2500	300, 500, 600, 1000, 1500, 2000, 2500, 3000		**-...**	-...
	Variable [mm]	50 ... 980	50 ... 1980	50 ... 2480	50 ... 2980			
Stroke length for GV, GQ (without stroke reserve)	Standard [mm]	100, 200, 300, 400, 500, 600, 700, 900	100, 200, 300, 400, 500, 600, 700, 800, 900, 1300, 1400, 1700, 1900	100, 200, 300, 400, 500, 600, 700, 800, 900, 1300, 1400, 1900, 2400	200, 400, 500, 900, 1400, 1900, 2400, 2900		**-...**	
	Variable [mm]	50 ... 880	50 ... 1880	50 ... 2380	50 ... 2880			
Function		Ball screw					**-BS**	-BS
Screw pitch		10	10	10	–		**-10P**	
		–	20	–	–		**-20P**	
		–	–	25	–		**-25P**	
		–	–	–	40		**-40P**	
Ball screw support		None						
		With ball screw support				[1]	**-S**	
		>705 mm[1)] >605 mm[2)]	>780 mm[1)] >680 mm[2)]	>883 mm[1)] >783 mm[2)]	>1224 mm[1)] >1124 mm[2)]			
Guide		Recirculating ball bearing guide					**-KF**	-KF
Stroke reserve	[mm]	0 ... *999* (0 = no stroke reserve)				[2]	**-...H**	
Motor attachment position		Motor on left					**-ML**	
		Motor on right					**-MR**	
Slide		Standard slide					**-GK**	
		Extended slide, protected			–		**-GQ**	
		Standard slide, protected			–		**-GP**	
		Extended slide					**-GV**	
Additional slide	Left	Additional slide, standard, left				[3]	**-KL**	
	Right	Additional slide, standard, right				[3]	**-KR**	
Lubrication function		Standard						
		Lubrication adapter				[4]	**-C**	
Displacement encoder, incremental		None						
		Resolution: 2.5 µm					**-M1**	
		Resolution: 10 µm					**-M2**	
Clamping unit		–	None					
		–	1-channel, left			[5]	**-1HL**	
		–	1-channel, right			[5]	**-1HR**	
		–	2-channel			[5]	**-2H**	
Actuation type		–	None					
		–	Pneumatic				**-PN**	

[1] **S** Only available at or above the specified strokes
1) In combination with slide GK, GP
2) In combination with slide GQ, GV

[2] **...H** The sum of nominal stroke and 2x stroke reserve must not exceed the maximum stroke length

[3] **KL, KR** If the protected slide variant (GQ, GP) is selected, the additional slide (KL, KR) is also protected
If the extended slide variant (GQ, GV) is selected, the additional slide (KL, KR) is not extended
If the slide with lubrication adapter (GK-C, GV-C) is selected, the additional slide (KL, KR) is also supplied with lubrication adapter

[4] **C** Not with standard slide, protected GP and extended slide, protected GQ

[5] **1HL, 1HR, 2H** Not with slides GQ, GV and additional slides KL, KR
Only with PN

Note

Ball screw support enables maximum travel speed with all stroke lengths

Accessories

Permitted axis/motor combinations for axial and parallel kits

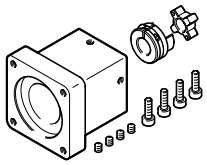

Under the following links you will find all information about:
- Axis/motor combinations
- Permitted third-party motors
- Technical data
- Dimensions

For axial kits ➔ Internet: eamm-a
For parallel kits ➔ Internet: eamm-u

Foot mounting HPE Material: galvanised steel RoHs-compliant

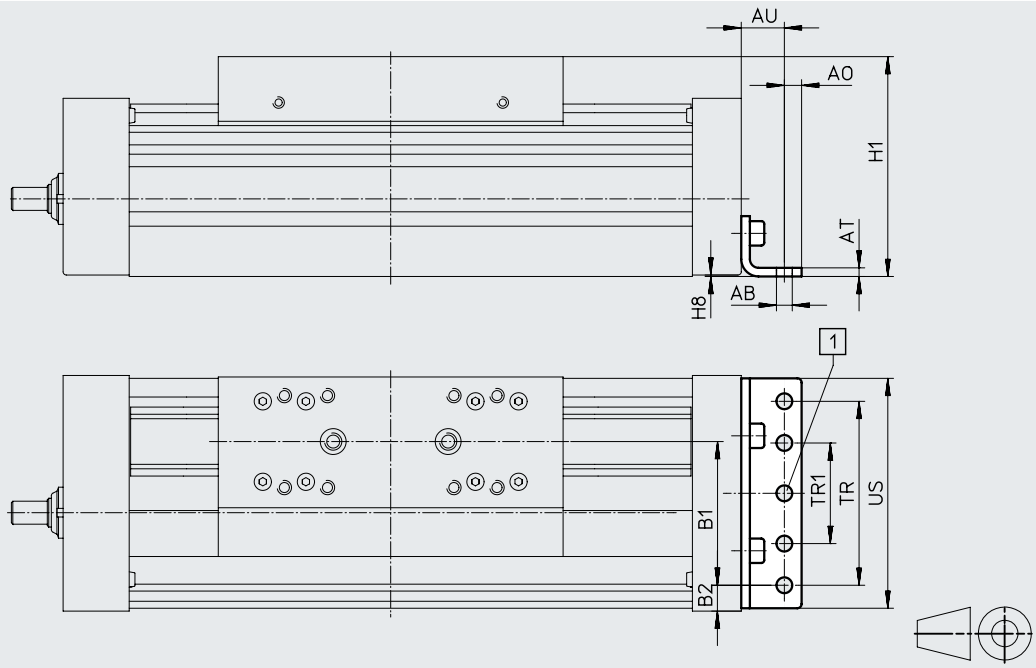

[1] Hole on HPE-120

Dimensions and ordering data

For size	AB ø	A0	AT	AU	B1	B2	H1
70	5.5	6	3	13	37	14.5	64
80	5.5	6	3	15	38	21	76.5
120	9	8	6	22	65	20	111.5
185	9	12	8	25	118	13	172.5

For size	H8	TR	TR1	US	Weight [g]	Part no.	Type
70	0.5	40	–	67	115	**558321**	**HPE-70**
80	0.5	40	–	80	150	**558322**	**HPE-80**
120	0.6	80	–	116	578	**558323**	**HPE-120**
185	0.5	160	80	182	1438	**558325**	**HPE-185**

Accessories

Profile mounting MUE Material: Anodised aluminium RoHS-compliant

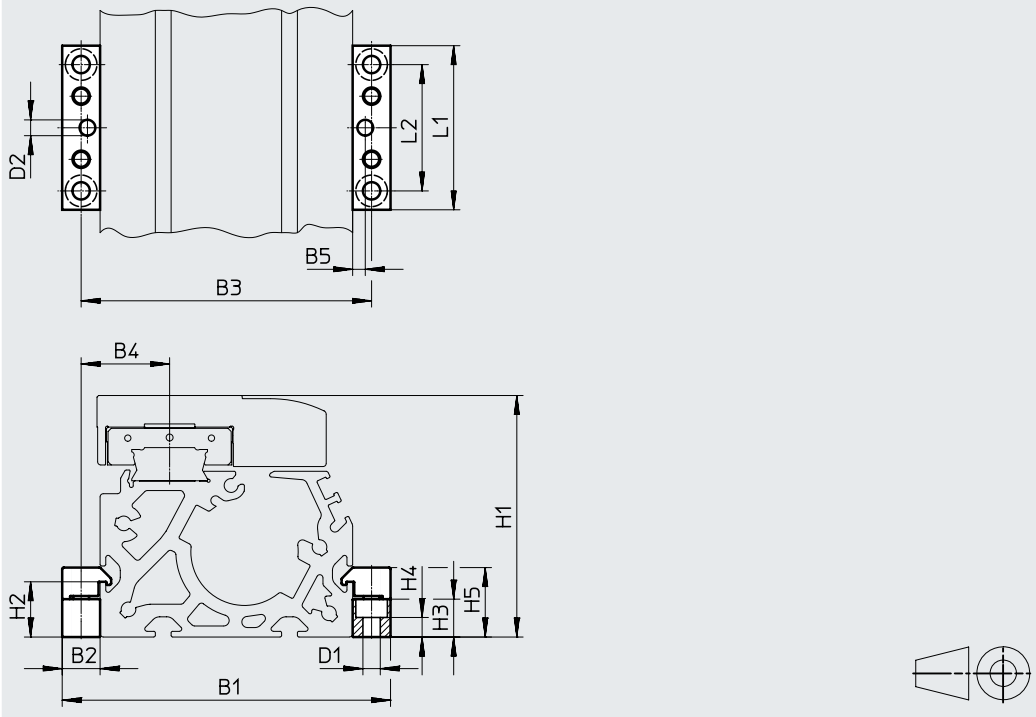

Dimensions and ordering data

For size	B1	B2	B3	B4	B5	D1 ø	D2 ø H7	H1	H2
70	91	12	79	22.5	4	5.5	5	64	17.5
80	104	12	92	28	4	5.5	5	76.5	17.5
120	154	19	135	42.5	4	9	5	111.5	16
185	220	19	201	62.5	4	9	5	172.5	16

For size	H3	H4	H5	L1	L2	Weight [g]	Part no.	Type
70	12	6.2	22	52	40	80	**558043**	**MUE-70/80**
80	12	6.2	22	52	40	80	**558043**	**MUE-70/80**
120	14	5.5	29.5	90	40	290	**558044**	**MUE-120/185**
185	14	5.5	29.5	90	40	290	**558044**	**MUE-120/185**

Accessories

Central support EAHF

Material:
Anodised aluminium
RoHs-compliant

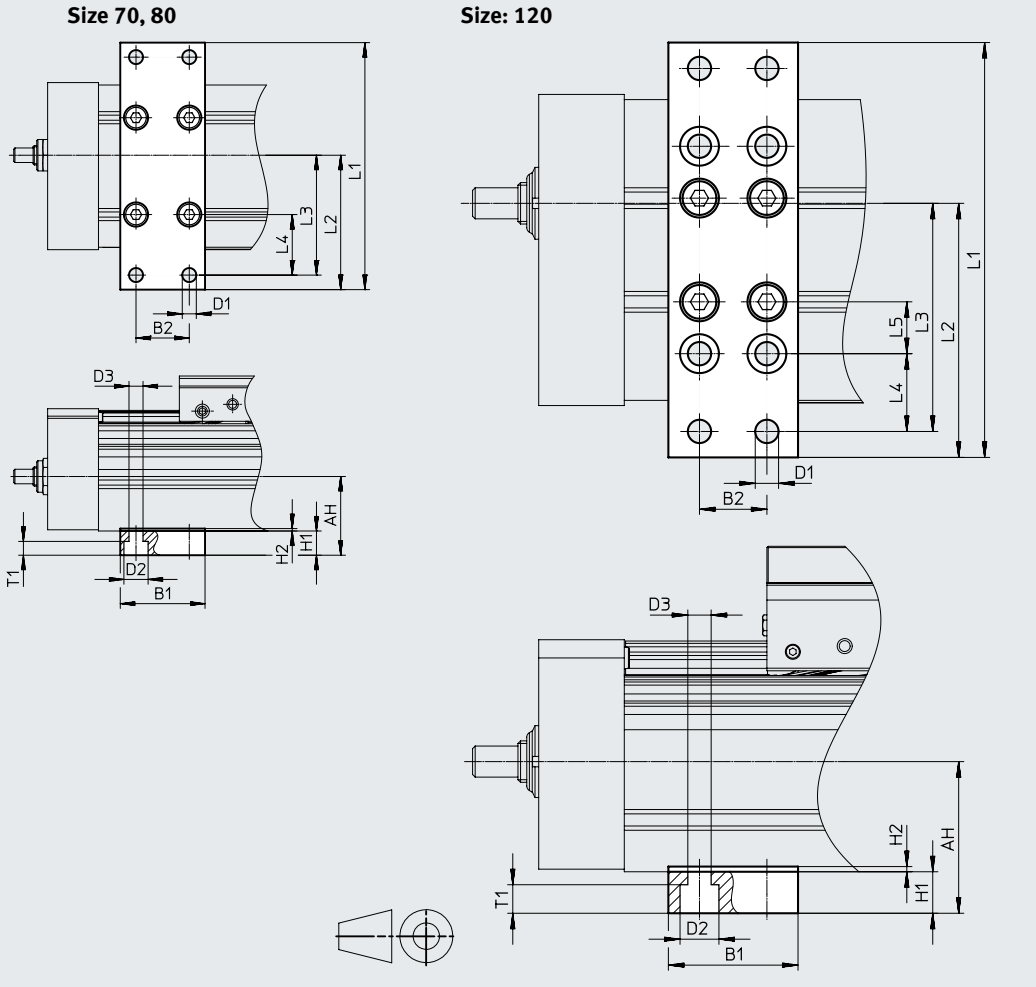

Dimensions and ordering data

For size	AH	B1	B2	D1 ø	D2 ø	D3 ø	H1	L1
70	32.5	35	22	5.8	10	5.8	10	102
80	37							112
120	58.5	50	26	9	15	9	16	160

For size	L2	L3	L4	L5	T1	Weight [g]	Part no.	Type
70	55.5	49.5	25	–	5.7	113	**2349256**	**EAHF-L5-70-P**
80	62	56	30			123	**3535188**	**EAHF-L5-80-P**
120	98	88	30	20	11	384	**2410274**	**EAHF-L5-120-P**

Accessories

Adjusting kit EADC-E15

Material:
EADC-E15-80/120: Wrought aluminium alloy
EADC-E15-185: Steel
RoHs-compliant

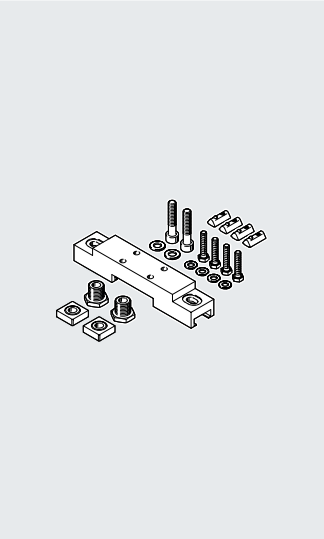

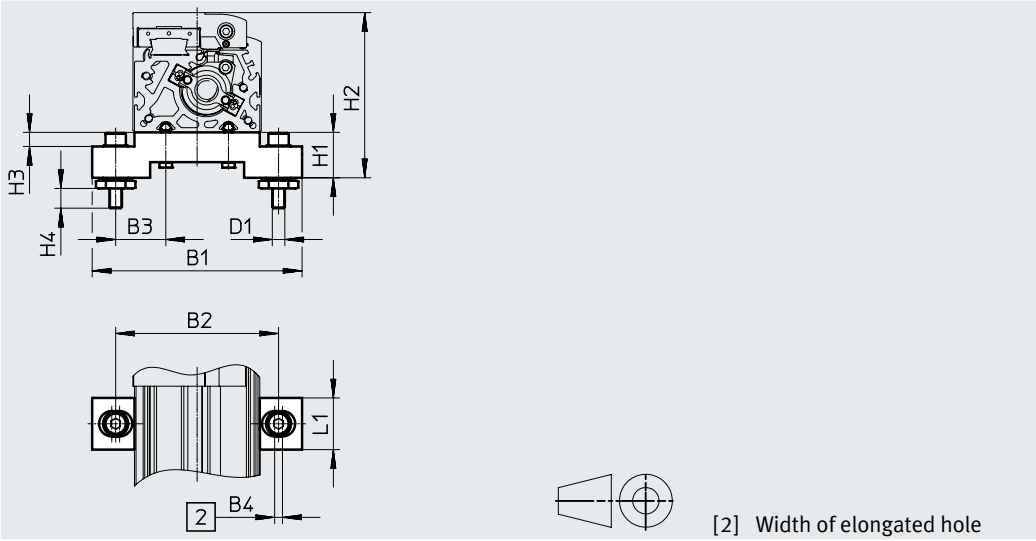

Dimensions and ordering data

For size	B1	B2	B3	B4	D1	H1
70	134	104	32	5	M8	29
80	134	104	32	5	M8	29
120	170	140	50	5	M8	29
185	236	209	64.5	5	M8	29

For size	H2	H3	H4	L1	Weight [g]	Part no.	Type
70	93	9	12.6	33	386	**8047566**	**EADC-E15-80-E7**
80	105.5	9	12.6	33	386	**8047566**	**EADC-E15-80-E7**
120	140.5	9	12.6	33	388	**8047567**	**EADC-E15-120-E7**
185	201.5	9	12.6	33	569	**8047568**	**EADC-E15-185-E7**

Accessories

Adjusting kit EADC-E16

Material:
Wrought aluminium alloy
RoHs-compliant

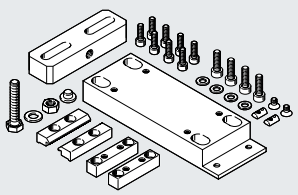

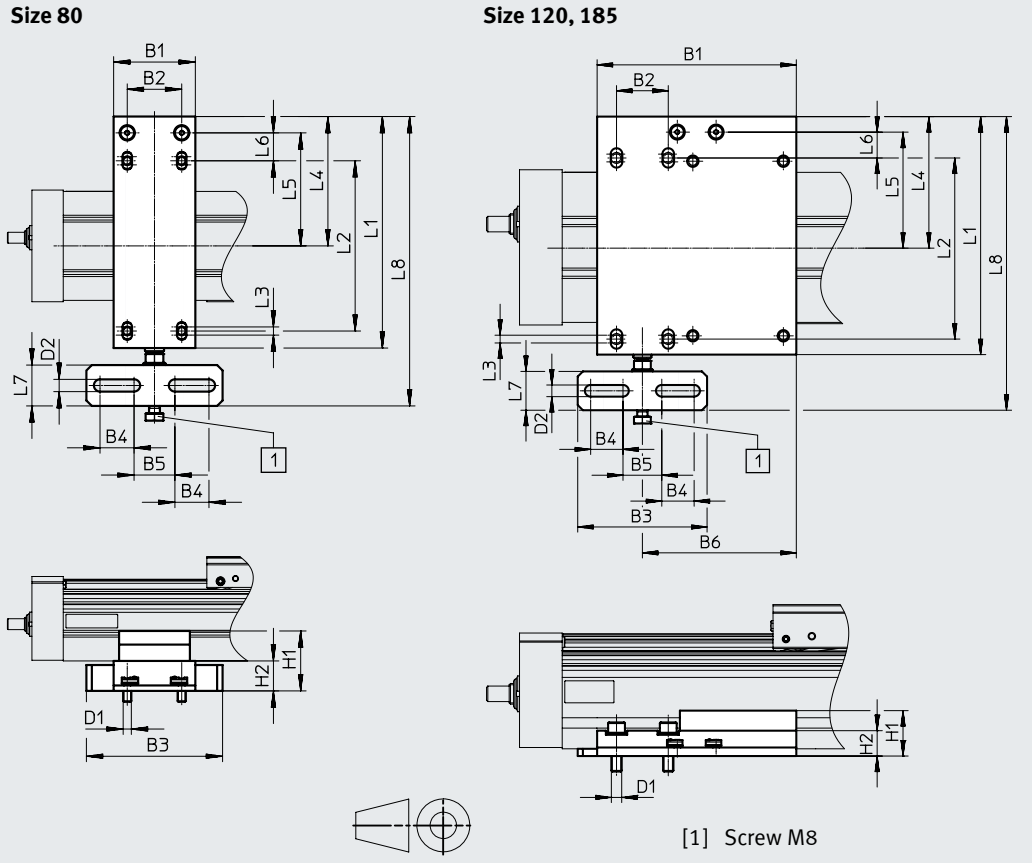

Dimensions and ordering data

For size	B1	B2	B3	B4	B5	B6	D1	D2	H1	H2	L1	L2
80	60	40	100	25	30	–	M6	9	44	22	170	125
120	154	40	100	25	30	119	M8	9	35.1	19.6	184	140
185	150	40	100	25	30	119	M8	9	35.1	19.6	272	220

For size	L3	L4	L5	L6	L7	L8	Weight [g]	Part no.	Type
80	6	95	83	20.5	30	212.5	828	**8047577**	**EADC-E16-80-E7**
120	6	101.7	89.7	20	30	227	1134	**8047578**	**EADC-E16-120-E7**
185	6	150	138	28	30	315	1457	**8047579**	**EADC-E16-185-E7**

Accessories

Shock absorber retainer KYE
Emergency buffer NPE ➔ page 57

Material:
Anodised aluminium
RoHs-compliant

Cannot be used in combination with the variants GP and GQ or GK-C, GV-C and 1H...-PN, 2H-PN.

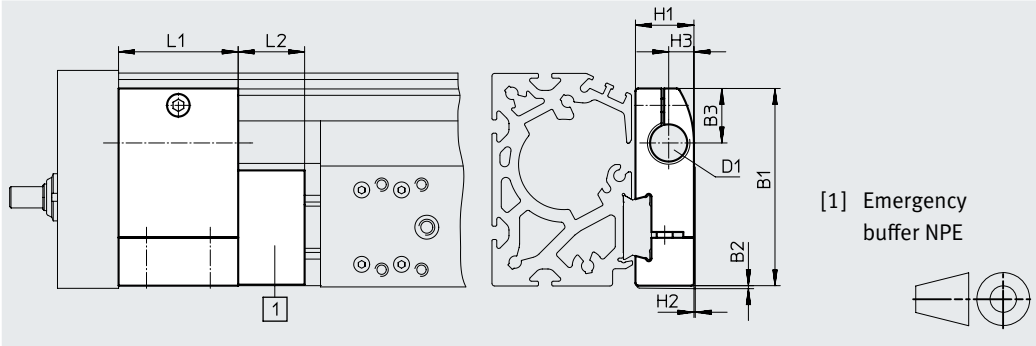

Dimensions and ordering data

For size	B1	B2	B3	D1	H1	H2	H3	L1	L2	Weight [g]	Part no.	Type
70	57.5	1	16.5	M12X1	18.2	0.5	7.5	30	15	75	**557584**	**KYE-70**
80	74.2	1	20.5	M16X1	22	0.5	9.5	45	25	170	**557585**	**KYE-80**
120	108.5	1	26	M22X1.5	31	1	14	60	40	680	**557586**	**KYE-120**
185	168	1	37	M26X1.5	42	4	18	75	60	1075	**557587**	**KYE-185**

Switch lug SF-EGC-1
For sensing via proximity switch SIES-8M

Material:
Galvanised steel
RoHs-compliant

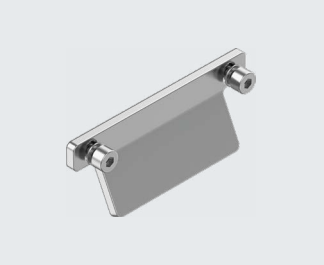

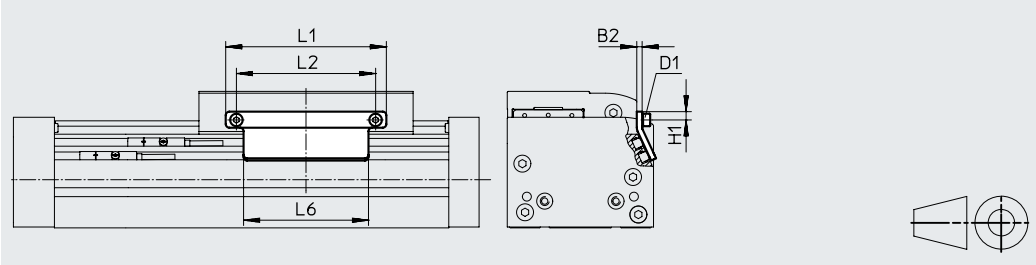

Dimensions and ordering data

For size	B2	D1	H1	L1	L2	L6	Weight [g]	Part no.	Type
70	3	M4	4.65	70	56	50	50	**558047**	**SF-EGC-1-70**
80	3	M4	4.65	90	78	70	63	**558048**	**SF-EGC-1-80**
120	3	M5	8	170	140	170	147	**558049**	**SF-EGC-1-120**
185	3	M5	10	230	200	230	246	**558051**	**SF-EGC-1-185**

Accessories

Switch lug SF-EGC-2
For sensing with proximity sensor SIEN-M8B or SIES-8M

Material:
Galvanised steel
RoHs-compliant

Sensor bracket HWS-EGC
For proximity switch SIEN-M8B

Material:
Galvanised steel
RoHS-compliant

Switch lug SF-EGC-2

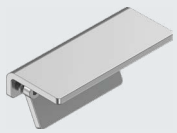

Sensor bracket HWS-EGC

Size 70 ... 120

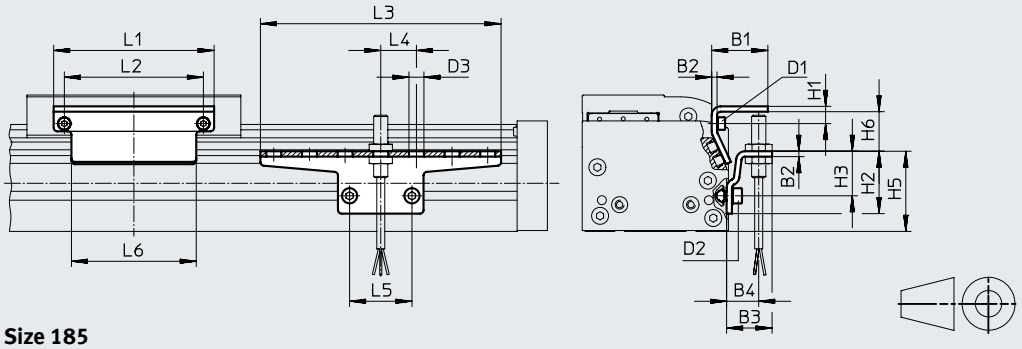

Size 185

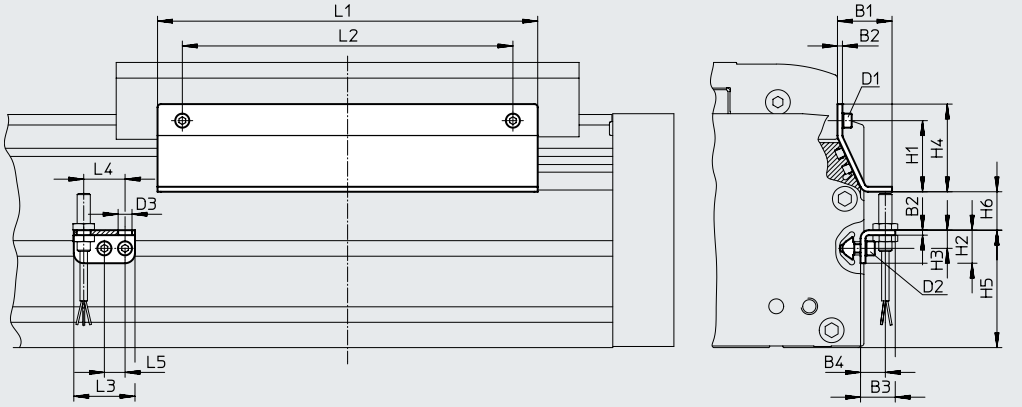

Dimensions and ordering data

For size	B1	B2	B3	B4	D1	D2	D3 ø	H1	H2
70	31.5	3	25.5	18	M4	M5	8.4	9.5	35
80	31.5	3	25.5	18	M4	M5	8.4	9.5	35
120	32	3	25.5	18	M5	M5	8.4	13.2	65
185	33	3	25.5	15	M5	M5	8.4	43	20

For size	H3	H4	H5	H6 max.	L1	L2	L3	L4	L5	L6
70	25	–	45	13.5	70	56	135	20	35	50
80	25	–	45	23.5	90	78	135	20	35	70
120	55	–	75	24	170	140	215	20	35	170
185	11	53	71	25.5	230	200	37	25	12.5	230

For size	Weight [g]	Part no.	Type
	Switch lug		
70	100	**558052**	**SF-EGC-2-70**
80	130	**558053**	**SF-EGC-2-80**
120	277	**558054**	**SF-EGC-2-120**
185	390	**558056**	**SF-EGC-2-185**

For size	Weight [g]	Part no.	Type
	Sensor bracket		
70	110	**558057**	**HWS-EGC-M5**
80	110	**558057**	**HWS-EGC-M5**
120	217	**570365**	**HWS-EGC-M8-B**
185	58	**560517**	**HWS-EGC-M8:KURZ (SHORT)**

Accessories

Ordering data	For size	Description	Part no.	Type	PU[1]
Emergency buffer NPE					
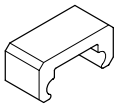	70	For use in combination with shock absorber retainer KYE	**562581**	**NPE-70**	1
	80		**562582**	**NPE-80**	
	120		**562583**	**NPE-120**	
	185		**562584**	**NPE-185**	
Slot nut NST					
	70, 80	For mounting slot	**150914**	**NST-5-M5-1**	1
			8047843	**NST-5-M5-10**	10
			8047878	**NST-5-M5-50**	50
	120, 185	For mounting slot	**150915**	**NST-8-M6-1**	1
			8047868	**NST-8-M6-10**	10
			8047869	**NST-8-M6-50**	50
Centring pin/sleeve ZBS/ZBH					
	70	For slide	**150928**	**ZBS-5**	10
	80, 120, 185		**8137184**	**ZBH-9-B**	
Slot cover ABP					
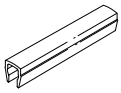	70, 80	For mounting slot Every 0.5 m	**151681**	**ABP-5**	2
	120, 185		**151682**	**ABP-8**	
Slot cover ABP-S					
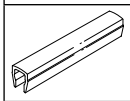	70 ... 185	For sensor slot Every 0.5 m	**563360**	**ABP-5-S1**	2
Clip SMBK					
	70 ... 185	For sensor slot, for mounting the proximity switch cables	**534254**	**SMBK-8**	10

1) Packaging unit

Accessories

Mounting options between axis and support profile

Depending on the adapter kit, the spacing between the axis and the support profile is:
x = 20 mm or 50 mm

The support profile must be mounted using at least 2 adapter kits. For longer strokes, an adapter kit must be used every 500 mm.

Example

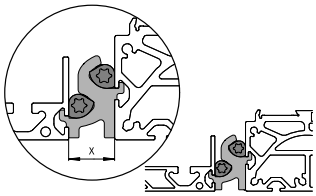

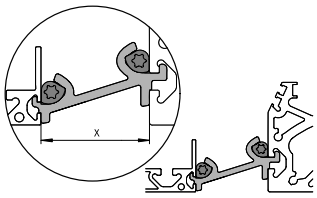

Ordering data

	For size	Description	Part no.	Type	PU[1)]
Adapter kit DHAM					
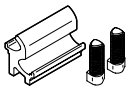	70, 80	• For mounting the support profile on the axis • Spacing between axis and profile is 20 mm	**562241**	**DHAM-ME-N1-CL**	1
	120, 185		**562242**	**DHAM-ME-N2-CL**	
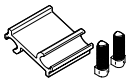	70, 80	• For mounting the support profile on the axis • Spacing between axis and profile is 50 mm	**574560**	**DHAM-ME-N1-50-CL**	
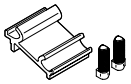	120, 185		**574561**	**DHAM-ME-N2-50-CL**	
Support profile HMIA					
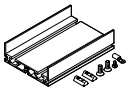	70 ... 185	• For guiding an energy chain	**539379**	**HMIA-E07-**	1

1) Packaging unit

Ordering data – Proximity switches for T-slot, inductive

Datasheets → Internet: sies

	Type of mounting	Electrical connection	Switching output	Cable length [m]	Part no.	Type
N/O						
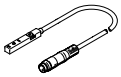	Inserted in the slot from above, flush with the cylinder profile	Cable, 3-core	PNP	7.5	**551386**	**SIES-8M-PS-24V-K-7.5-OE**
		Plug M8x1, 3-pin		0.3	**551387**	**SIES-8M-PS-24V-K-0.3-M8D**
		Cable, 3-core	NPN	7.5	**551396**	**SIES-8M-NS-24V-K-7.5-OE**
		Plug M8x1, 3-pin		0.3	**551397**	**SIES-8M-NS-24V-K-0.3-M8D**
N/C						
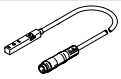	Inserted in the slot from above, flush with the cylinder profile	Cable, 3-core	PNP	7.5	**551391**	**SIES-8M-PO-24V-K-7.5-OE**
		Plug M8x1, 3-pin		0.3	**551392**	**SIES-8M-PO-24V-K-0.3-M8D**
		Cable, 3-core	NPN	7.5	**551401**	**SIES-8M-NO-24V-K-7.5-OE**
		Plug M8x1, 3-pin		0.3	**551402**	**SIES-8M-NO-24V-K-0.3-M8D**

Accessories

Ordering data – Proximity switch M8 (round design), inductive

Datasheets → Internet: sien

	Electrical connection	LED	Switching output	Cable length [m]	Part no.	Type
N/O						
	Cable, 3-core	■	PNP	2.5	**150386**	**SIEN-M8B-PS-K-L**
			NPN	2.5	**150384**	**SIEN-M8B-NS-K-L**
	Plug M8x1, 3-pin	■	PNP	–	**150387**	**SIEN-M8B-PS-S-L**
			NPN	–	**150385**	**SIEN-M8B-NS-S-L**
N/C						
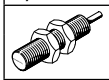	Cable, 3-core	■	PNP	2.5	**150390**	**SIEN-M8B-PO-K-L**
			NPN	2.5	**150388**	**SIEN-M8B-NO-K-L**
	Plug M8x1, 3-pin	■	PNP	–	**150391**	**SIEN-M8B-PO-S-L**
			NPN	–	**150389**	**SIEN-M8B-NO-S-L**

Ordering data – Connecting cables

Datasheets → Internet: neba

	Electrical connection 1, connection technology	Electrical connection 1, cable outlet	Electrical connection 2, connection technology	Electrical connection 2, number of pins/ cores	Cable length [m]	Part no.	Type
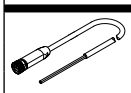	M8x1 A-coded to EN 61076-2-104	Straight	Open end	3	2.5	**8078223**	**NEBA-M8G3-U-2.5-N-LE3**
					5.0	**8078224**	**NEBA-M8G3-U-5-N-LE3**
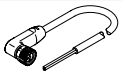	M8x1 A-coded to EN 61076-2-104	Angled	Open end	3	2.5	**8078230**	**NEBA-M8W3-U-2.5-N-LE3**
					5.0	**8078231**	**NEBA-M8W3-U-5-N-LE3**

Ordering data – Encoder cables for displacement encoder system, EGC-...-M1/-M2

Datasheets → Internet: nebm

	Electrical connection, left	Electrical connection, right	Cable length [m]	Part no.	Type
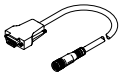	Displacement encoder EGC-...-M1/-M2	Motor controllers CMMP-AS and CMMT-AS	5.0	**1599105**	**NEBM-M12G8-E-5-S1G9-V3**
			10	**1599106**	**NEBM-M12G8-E-10-S1G9-V3**
			15	**1599107**	**NEBM-M12G8-E-15-S1G9-V3**
			X[1]	**1599108**	**NEBM-M12G8-E-...-S1G9-V3**

1) Max. cable length: 25 m.

Ordering data – Adapter

	Description	Part no.	Type
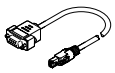	Required in combination with the servo drive CMMT-AS as adapter between encoder cable NEBM-M12G8-...-V3 and interface X3 (position encoder 2)	**8106112**	**NEFM-S1G9-K-0.5-R3G8**