Vacuum generators OVEL

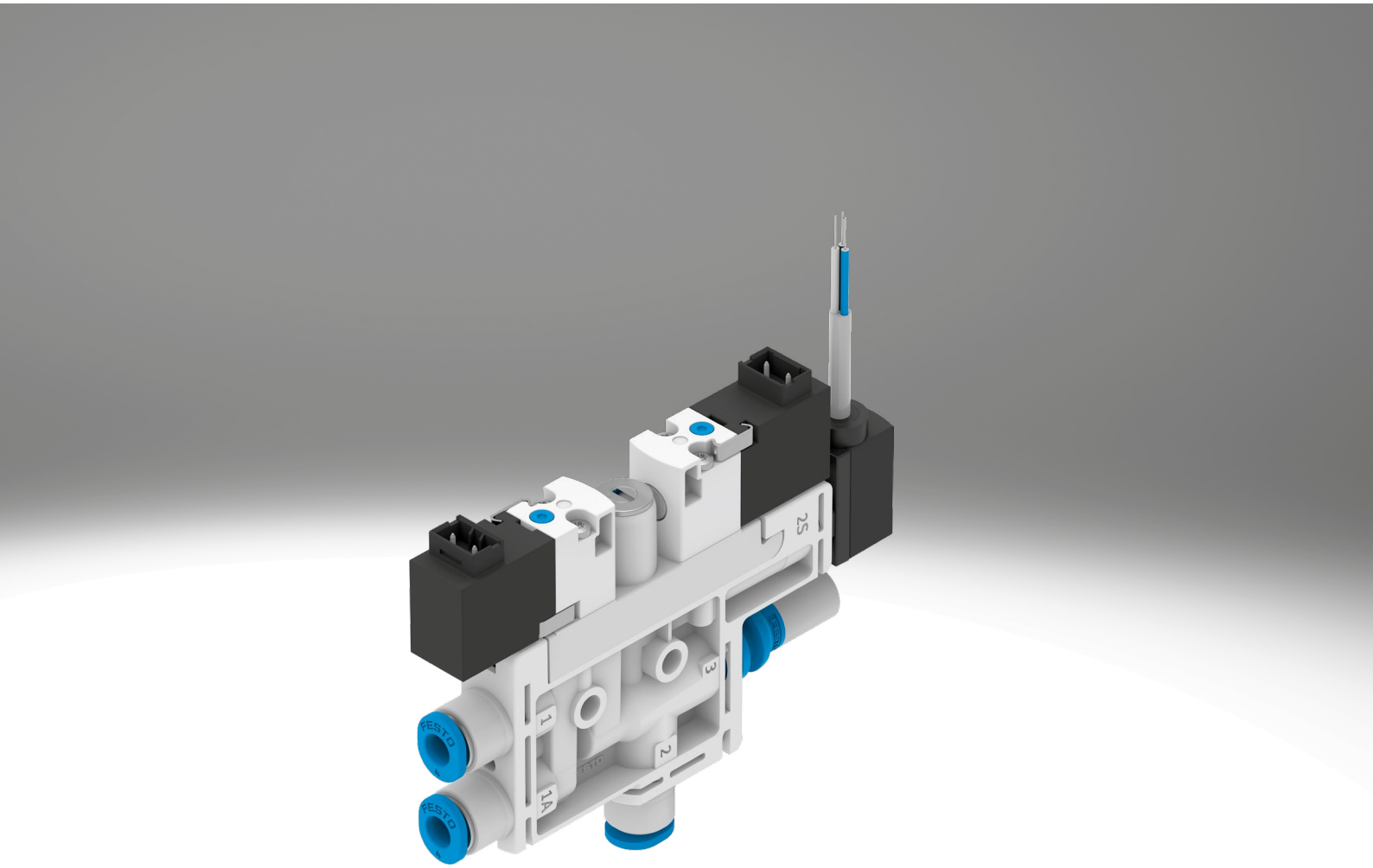

Key features

At a glance

Rapid purging of vacuum for safe placement of the workpiece by a solenoid valve to control the ejector pulse, optional

Flow control screw to adjust the ejector pulse

Electrical connection via H3 plug or an M8 plug

Fast vacuum build-up using a solenoid valve to control the compressed air supply

Supply port, secured with clamping clip

Additional compressed air port for the separate supply of the ejector pulse, optional, secured with clamping clip

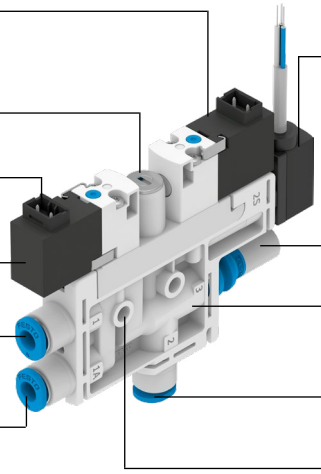

Pressure transmitter SPTE/pressure sensor SPAE for monitoring the vacuum, optional, secured with clamping clip

Maintenance-free operation and reduced noise level with an open silencer, optional

Vacuum generator cartridge, secured with clamping clip

Vacuum connection, secured with clamping clip

Housing with mounting holes

The compact vacuum generator

OVEL ➔ page 3

- Low-cost, compact vacuum generator
- Low weight
- Various performance levels and vacuum types
- Short switching times thanks to integrated solenoid valves
  - Vacuum on/off
  - Ejector pulse
- Easy to install using H3 plugs and push-in fittings
- Straightforward mounting with retaining screws
- Quiet operation thanks to integrated silencer
- Integrated filter
- Reduced contamination of the vacuum generator thanks to an open silencer
- Solenoid valves are switched by mechanical manual override
- Monitoring of the vacuum by a vacuum sensor
- Link up to 8 vacuum generators on a single common supply manifold.

OVTL ➔ ovtl

The vacuum generator OVTL is a configurable module comprising vacuum generator OVEL, the common supply manifold OABM-P and connection accessories.
All products are available from the factory fully assembled.

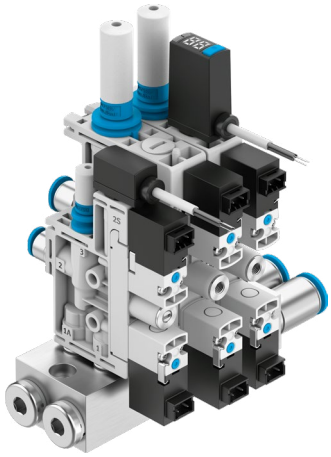

Functional principle of OVEL

Vacuum ON/OFF

The compressed air supply is controlled by a solenoid valve. The solenoid valve can be supplied with the N/C (normally closed) switching function, i.e. the vacuum is not generated until the vacuum generator is pressurised with compressed air and the solenoid valve has been switched.

Optional ejector pulse

After the vacuum is switched off, an ejector pulse is activated and generated by a second solenoid valve to release the workpiece safely from the suction cup with connection and to purge the vacuum quickly.

The compressed air for the ejector pulse can be supplied either via the supply port or a separate connection.

Vacuum sensor, optional

The set or taught-in setpoint value for the generated vacuum is monitored by a vacuum sensor.

If the setpoint value is reached or if it is not reached due to malfunctions (e.g. leakages, dropped workpiece), the vacuum sensor emits an electrical signal.

OVEL-...-V1B/V1V/B2B/B2V:
Pressure transmitter SPTE with an analogue output (➔ page 18).
Detection of analogue signals and conversion into digital signals with downstream signal converter SCDN with LCD display (➔ page 23).

OVEL-...-V1PNLK/B2PNLK:
Pressure sensor SPAE with various switching outputs and LCD display, IO-Link® and teach-in function (➔ page 20).

Peripherals overview

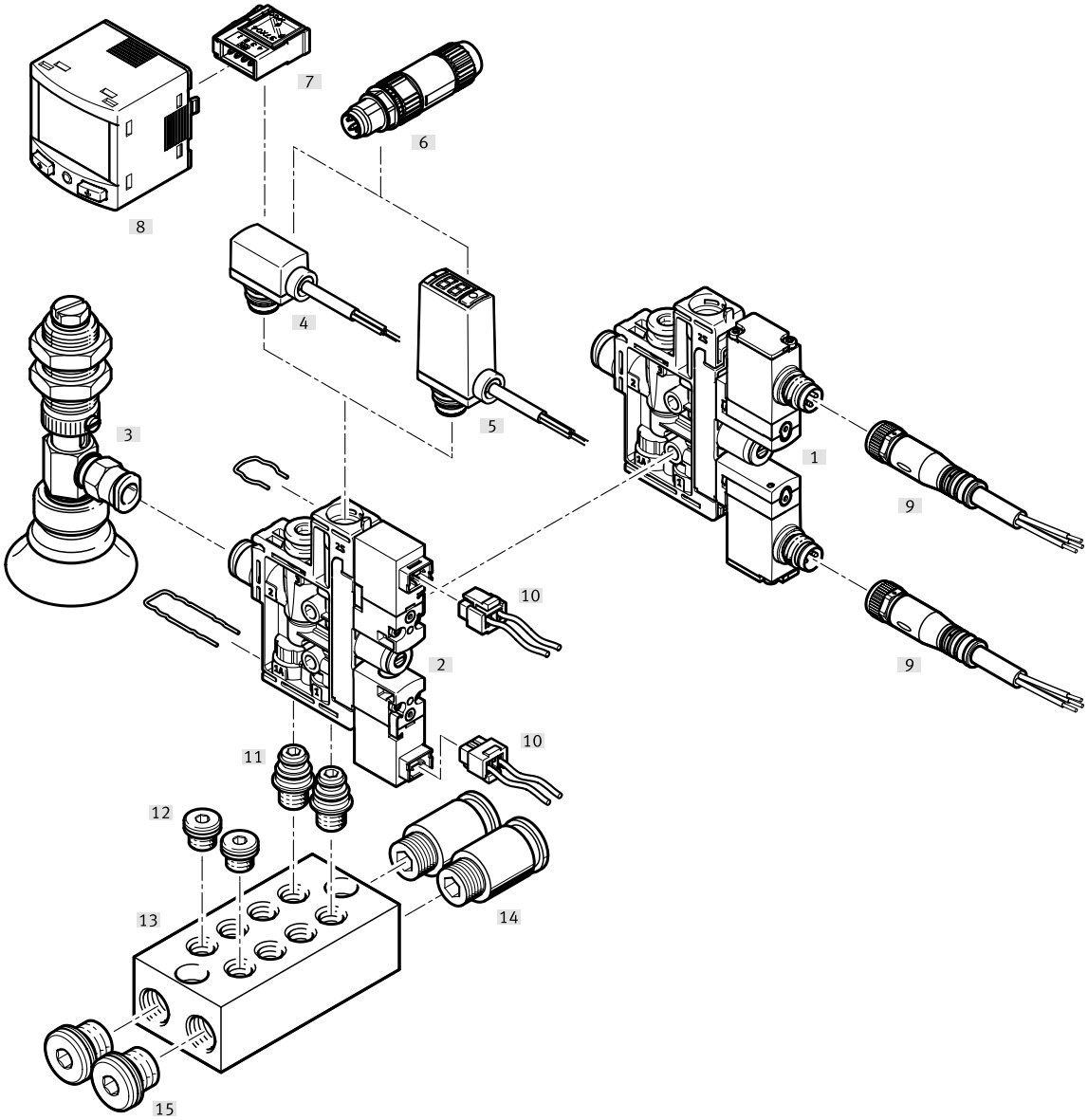

Mounting attachments and accessories		OVEL-...-PQ	OVEL-...-P	→ Page/Internet
[1]	Vacuum generators OVEL-...-R8	■	■	ovel
[2]	Vacuum generators OVEL-...-H3	■	■	ovel
[3]	Vacuum suction gripper ESG	■	■	esg
[4]	Pressure transmitter SPTE	■	■	18
[5]	Pressure sensor SPAE	■	■	20
[6]	Plug NECU-S-M8G3/M12G3	■	■	23
[7]	Plug NECU-S-ECG4	■	■	23
[8]	Signal converter SCDN	■	■	23
[9]	Plug socket with cable NEBA	■	■	23
[10]	Plug socket with cable NEBV	■	■	23
[11]	Mounting kit OABM-MK	–	■	16
[12]	Blanking plug B-M7	–	■	23
[13]	Common supply manifold OABM-P	–	■	14
[14]	Push-in fitting QS	–	■	23
[15]	Blanking plug B-1/8	–	■	23
–	Suction cup holder ESH	■	■	esh
–	Vacuum suction cup ESS	■	■	ess
–	Vacuum filter OAFF	■	■	17

Type codes

001	Series	
OVEL	Vacuum suction nozzle, electropneumatic	

002	Vacuum generation	
5	Laval nozzle 0.45 mm	
7	Laval nozzle 0.7 mm	
10	Laval nozzle 0.95 mm	

003	Vacuum type	
H	High vacuum	
L	High suction rate	

004	Size [mm]	
10	10	
15	15	

005	Supply air connection	
P	For P linking	
PQ	QS connections, metric	

006	Vacuum connection	
VM7	Female thread M7	
VQ3	Push-in connector 3 mm	
VQ4	Push-in connector 4 mm	
VQ6	Push-in connector 6 mm	

007	Exhaust connection	
RQ	QS connections, metric	
UA	Open silencer UO	
UC	Closed silencer UC	

008	Ejector pulse connection	
	Via supply air connection	
Z	Additional connection	

009	Vacuum valve	
C	Normally closed	

010	Additional function	
	Without ejector pulse	
A	Electric ejector pulse	

011	Pressure measuring range vacuum sensor	
	Without vacuum sensor	
V1	0 ... -1 bar	
B2	-1 ... 1 bar	

012	Output signal vacuum sensor	
	Without vacuum sensor	
B	1 ... 5 V	
V	0 ... 10 V	
PNLK	PNP or NPN or IO-Link®	

013	Electrical connection	
H3	Connection pattern H, vertical plug	
R8	Individual connector M8, 3-pin	

Note

The ordering data include possible combinations.

Datasheet

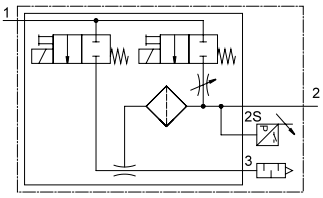

Function
N/C, normally closed:
- With/without ejector pulse
- Push-in connectors
- Open silencer
- With/without vacuum sensor
- Prepared for common supply manifold

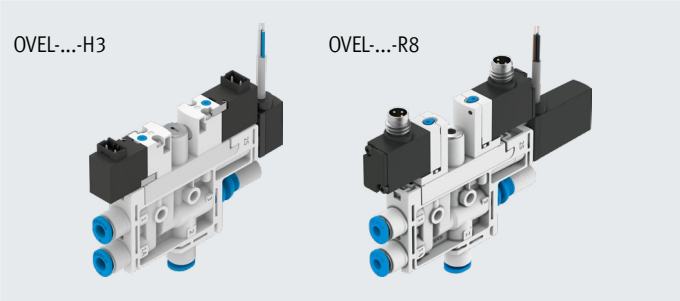

General technical data						
Type		OVEL-5-H	OVEL-5-L	OVEL-7-H	OVEL-7-L	OVEL-10-H/L
Nominal width of Laval nozzle [mm]		0.45		0.7		0.95
Grid dimension [mm]		10		15		15
Grade of filtration [µm]		40				
Mounting position		Any				
Type of mounting		With through-hole				
		On manifold rail				
Pneumatic connection 1	OVEL-...-P	Common line via manifold rail				
	OVEL-...-PQ-VQ3	For tubing O.D. 3 mm	–	–		–
	OVEL-...-PQ	For tubing O.D. 4 mm		For tubing O.D. 4 mm	For tubing O.D. 6 mm	For tubing O.D. 6 mm
Vacuum connection	OVEL-...-VQ3	For tubing O.D. 3 mm		–		–
	OVEL-...-VQ4	For tubing O.D. 4 mm		For tubing O.D. 4 mm	–	–
	OVEL-...-VQ6	–		–	For tubing O.D. 6 mm	For tubing O.D. 6 mm
Pneumatic connection 3	OVEL-...-UA	Open silencer				
	OVEL-...-RQ	For tubing O.D. 4 mm		For tubing O.D. 6 mm		For tubing O.D. 6 mm
Port for ejector pulse[1)]	OVEL-...-Z-A	Corresponds to the selected size of pneumatic port 1				

1) If there is no ejector pulse or the ejector pulse is generated via pneumatic port 1, the additional port for the ejector pulse is sealed with a blanking plug.

Technical data – Design			
Type		OVEL-...-UA	OVEL-...-RQ
Design		T-shape	
Ejector characteristic	OVEL-...-H	High vacuum/standard	
	OVEL-...-L	High suction rate/standard	
Silencer design		Open	–
Integrated function		On/off valve, electric	
		Filter	
		Open silencer	–
	OVEL-...-A	Ejector pulse, electrical	
	OVEL-...-A	Flow control valve	
	OVEL-...-V1B/V1V/B2B/B2V	Pressure transmitter	
	OVEL-...-V1PNLK/B2PN-LK	Pressure sensor	
Valve function		Closed	
Manual override		Non-detenting	

Datasheet

Operating and environmental conditions			
		OVEL with vacuum sensor	OVEL without vacuum sensor
Operating pressure	[bar]	2 ... 7	
Nominal operating pressure	[MPa]	0.4	
	[bar]	4	
	[psi]	58	
Operating medium		Compressed air to ISO 8573-1:2010 [7:4:4]	
Note on the operating/pilot medium		Lubricated operation not possible	
Ambient temperature	[°C]	0 ... +50	
Temperature of medium	[°C]	0 ... +50	
Corrosion resistance class CRC[1]		2	
CE marking (see declaration of conformity)[2]		To EU EMC Directive	–
UKCA marking (see declaration of conformity)[2]		To UK EMC regulations	–
Certification[2]		c UL us - Listed (OL)	
KC marking[3]		KC EMC	–
Degree of protection		IP40	

1) More information www.festo.com/x/topic/crc
2) More information: www.festo.com/catalogue/ovel → Support/Downloads.
If the devices are subject to usage restrictions in residential, commercial or light-industrial environments, further measures for the reduction of the emitted interference may be necessary.
3) Applies to products with vacuum sensor.

Performance data – High vacuum				
Type		OVEL-5-H	OVEL-7-H	OVEL-10-H
Max. vacuum	[%]	89	92	92
Operating pressure for max. vacuum	[MPa]	0.42	0.45	0.38
	[bar]	4.2	4.5	3.8
	[psi]	60.9	65.25	55.1
Operating pressure for max. suction rate	[MPa]	0.3	0.4	0.4
	[bar]	3	4	4
	[psi]	43.5	58	58
Max. suction rate with respect to atmosphere	[l/min]	4	17	21
Pressurisation time at nominal operating pressure 4 bar (for 1 l volume)[1]	[s]	2	1.2	1
Sound pressure level at p_1 = 4 bar	[db(A)]	64	61	68

1) Time required to reduce the vacuum to a residual vacuum of –0.05 bar

Performance data – High suction rate				
Type		OVEL-5-L	OVEL-7-L	OVEL-10-L
Operating pressure for max. suction rate	[bar]	5	5	6
Max. suction rate with respect to atmosphere	[l/min]	11	33	45
Pressurisation time at nominal operating pressure 4 bar (for 1 l volume)[1]	[s]	0.8	0.4	0.4
Sound pressure level at p_1 = 4 bar	[db(A)]	52	64	67

1) Time required to reduce the vacuum to a residual vacuum of –0.05 bar

Datasheet

Technical data – Electrical connection			
Type		OVEL without ejector pulse	OVEL with ejector pulse
Solenoid valve			
Electrical connection input	Function	Vacuum generation	
		–	Ejector pulse
	Connection type	Plug	2x plugs
	Connection technology	Plug pattern H	
	Number of pins/cores	2	
	Plug pattern		
	Type of mounting	Snap-locking	
Operating voltage range	[V DC]	21.6 ... 26.4	
Duty cycle	[%]	100	
Characteristic coil data, 24 V DC	[W]	1.0 (...-H3), 1.28 (...-R8)	
Vacuum sensor			
Electrical connection output	Function	Sensor	
	Connection type	Cable	
	Connection technology	Open end	
	Number of pins/cores	3	
Cable diameter	[mm]	2.9 ±0.1	
Cable length	[m]	2.5	
Nominal conductor cross section	[mm²]	0.14	
Cable characteristic		Suitable for energy chains	

Technical data – Vacuum sensor							
Type		OVEL-...-V1B	OVEL-...-V1V	OVEL-...-B2B	OVEL-...-B2V	OVEL-...-V1PNLK	OVEL-...-B2PNLK
Mechanical system							
Measurement method		Piezoresistive pressure sensor				Piezoresistive pressure sensor with display	
Pressure measuring range	[MPa]	–0.1 ... 0		–0.1 ... 0.1		–0.1 ... 0	–0.1 ... 0.1
	[bar]	–1 ... 0		–1 ... 1		–1 ... 0	–1 ... 1
	[psi]	–14.5 ... 0		–14.5 ... 14.5		–14.5 ... 0	–14.5 ... 14.5
Setting options		–				Teach-in	
						IO-Link®	
						Via display and buttons	
Display type		–				LED display, 2-digit	
Electrical							
Operating voltage range, sensor	[V DC]	10 ... 30	18 ... 30	10 ... 30	18 ... 30	18 ... 30	
Switching output		–				PNP/NPN switchable	
Switching element function		–				N/C or N/O, switchable	
Switching function		–				Freely programmable	
Analogue output	[V]	1 ... 5	0 ... 10	1 ... 5	0 ... 10	–	

Materials	
Housing	Reinforced PA
Silencer	PE
Jet nozzle	Wrought aluminium alloy
Female nozzle	POM
Filter	POM
Adjusting screw	Steel
Connecting thread	POM
Screws	Steel
Cable sheath	PVC (colour: grey)
Seals	NBR
Note on materials	RoHS-compliant
LABS (PWIS) conformity	VDMA24364-B1/B2-L

Datasheet

Vacuum p_u as a function of operating pressure p_1

High vacuum

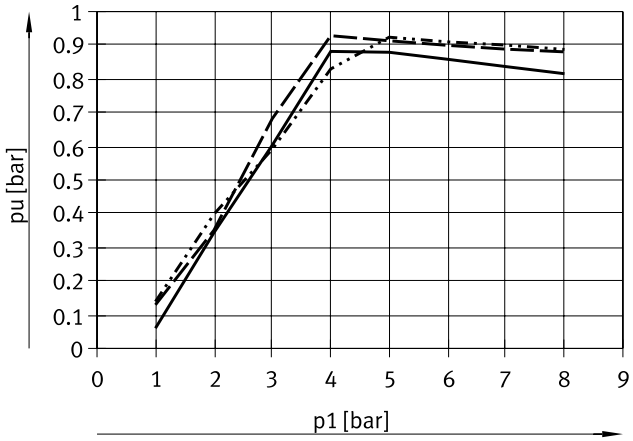

High suction rate

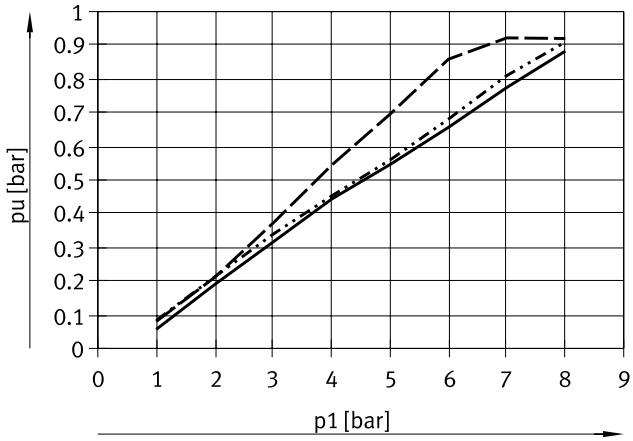

Evacuation time t_{evac} as a function of vacuum p_u for 1 l volume at 4 bar operating pressure

High vacuum

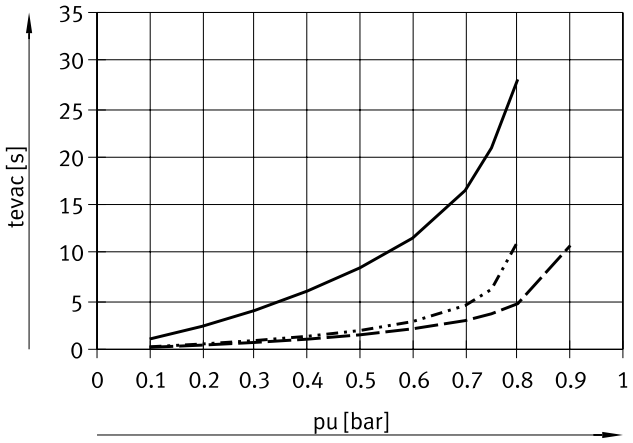

High suction rate

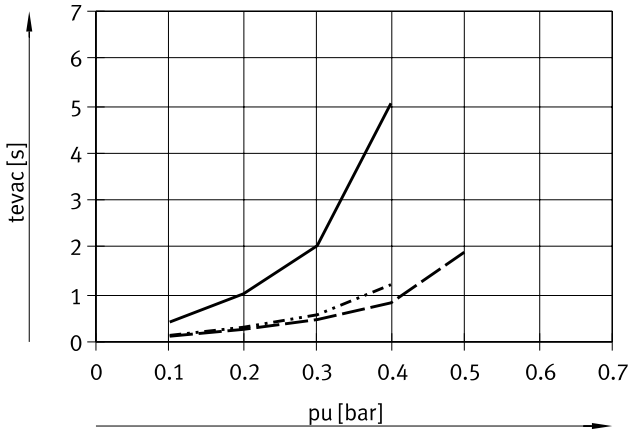

Air consumption q_n as a function of operating pressure p_1

High vacuum/high suction rate

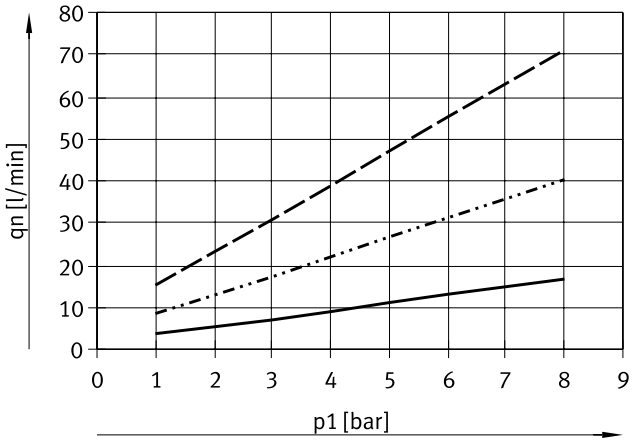

Datasheet

Dimensions Download CAD data ➔ www.festo.com

[ ] Without ejector pulse and vacuum sensor
[RQ] Push-in connector on pneumatic connection 3
[H3] Electrical connection via vertical plug, plug pattern H

OVEL-5

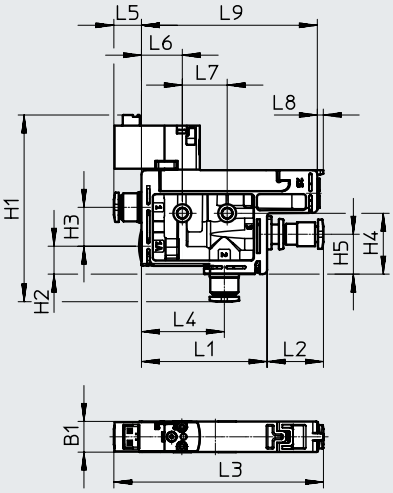

OVEL-7/10

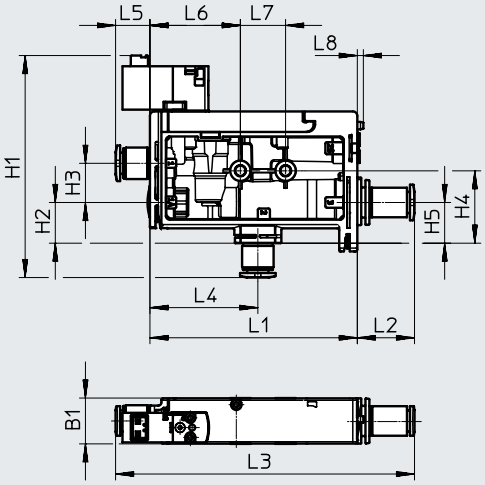

[A] With ejector pulse
[UA] Open silencer on pneumatic port 3
[V1B]/[V1V]/[B2B]/[B2V]/[V1PNLK]/[B2PNLK] Vacuum sensor
[H3] Electrical connection via vertical plug, plug pattern H

OVEL-5

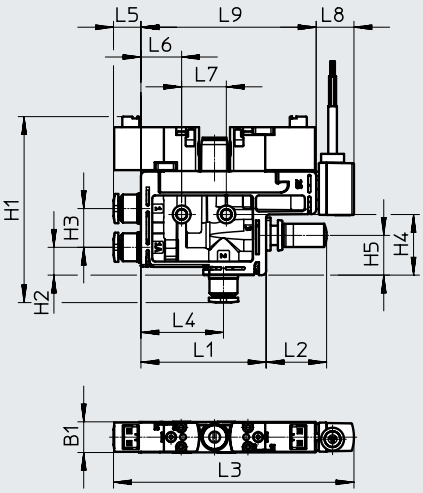

OVEL-7/10

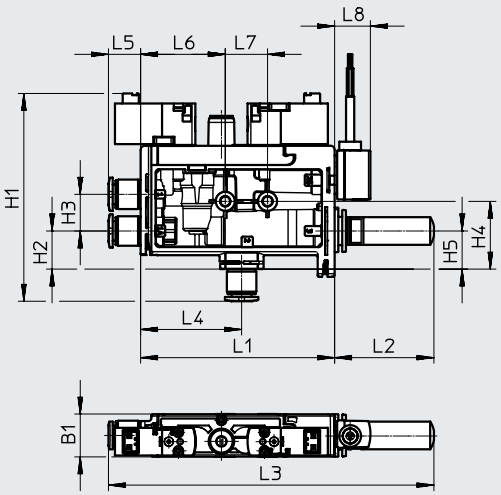

Type	B1 ±0.3	H1 ±0.8	H2 ±0.5	H3 ±0.5	H4 ±0.2	H5 ±0.5	L1 ±0.8	L2 ±0.8		L3 ±2		L4 ±0.5	L5 ±0.5	L6 ±0.2	L7 ±0.2	L8 ±0.8	L9 ±0.8
								[RQ]	[UA]	[RQ]	[UA]						
OVEL-5-...-H3										70	71					2	
OVEL-5-...-V1B/V1V/B2B/B2V-H3	10.3	62	9.4	13	20.4	13	42	19	20.2	81	81	27.7	9.4	13.7	15	13	59
OVEL-5-...-V1PNLK/B2PNLK-H3										99	99					31	
OVEL-7-H-...-H3										97	114					2	
OVEL-7-H-...-V1B/V1V/B2B/B2V-H3	15.2	72	13.5	13	24	13.5	68.8	19	35.5	97	114	35.8	9.4	30	15	13	–
OVEL-7-H-...-V1PNLK/B2PNLK-H3										109	114					31	
OVEL-7-L-...-H3										99	116					2	
OVEL-7-L-...-V1B/V1V/B2B/B2V-H3	15.2	74	13.5	13	24	13.5	68.8	19	35.5	99	116	35.8	11.4	30	15	13	–
OVEL-7-L-...-V1PNLK/B2PNLK-H3										111	116					31	
OVEL-10-...-H3										99	116					2	
OVEL-10-...-V1B/V1V/B2B/B2V-H3	15.2	74	13.5	13	24	13.5	68.8	19	35.5	99	116	35.8	11.4	30	15	13	–
OVEL-10-...-V1PNLK/B2PLNK-H3										111	116					31	

Datasheet

Dimensions Download CAD data ➔ www.festo.com

[A] With ejector pulse

[R8] Electrical connection via individual plug M8, 3-pin

OVEL-5

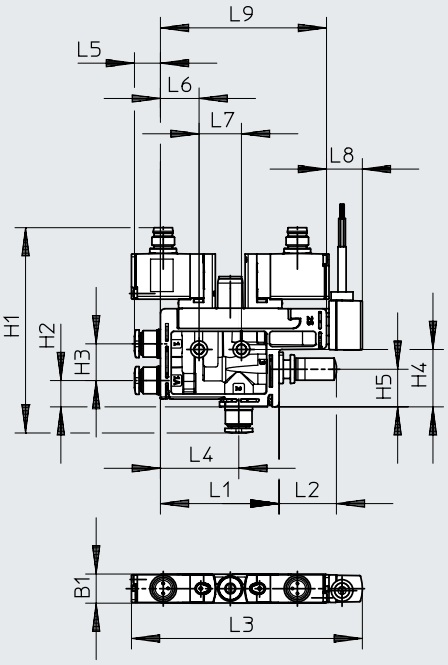

OVEL-7/10

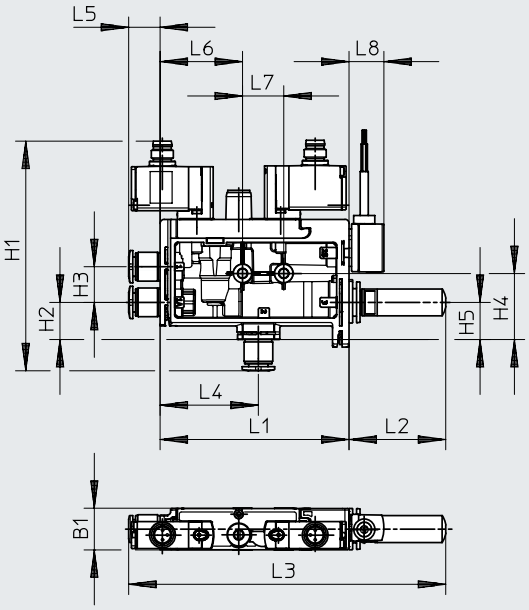

	B1 ±0.3	H1 ±0.8	H2 ±0.5	H3 ±0.5	H4 ±0.2	H5 ±0.5	L1 ±0.8	L2 ±0.8	L3 ±2	L4 ±0.5	L5 ±0.5	L6 ±0.2	L7 ±0.2	L8 ±0.8	L9 ±0.8
OVEL-5-H/L-10-P-...-VQ...-UA-...-B/V...-R8	10.3	73	9.4	13	20.4	13	42	20.2	82	27.7	10.3	13.7	15	13	59
OVEL-5-H/L-10-P-...-VQ...-UA-...-...PNLK-R8									99					31	
OVEL-5-H/L-10-P-...-VQ...-UA-...-R8									72					2	
OVEL-5-H-10-P-...-VQ...-UA-...-B/V...-R8								20.3	82					13	
OVEL-5-H-10-P-...-VQ...-UA-...-...PNLK-R8									99					31	
OVEL-5-H-10-P-...-VQ...-UA-...-R8									73					2	
OVEL-7-H-...-VQ4-UA-...-B/V...-R8	15.2	84	13.5	13	24	13.5	68.8	35.5	114	35.8	10.3	30	15	13	–
OVEL-7-L-...-VQ6-UA-...-B/V...-R8		86							116		11.4				
OVEL-10-H/L-...-VQ6-UA-...-B/V...-R8															
OVEL-7-H-...-VQ4-UA-...-PNLK...-R8		84							114		10.3			31	
OVEL-7-L-...-VQ6-UA-...-PNLK...-R8		86							116		11.4				
OVEL-10-H/L-...-VQ6-UA-...-PNLK...-R8															
OVEL-7-H-...-VQ4-UA-...-R8		84							114		10.3			2	
OVEL-7-L-...-VQ6-UA-...-R8		86							116		11.4				
OVEL-10-H/L-...-VQ6-UA-...-R8															
OVEL-7-H-...-VQ4-UC-...-B/V...-R8		84						29.5	108		10.3			13	
OVEL-10-H-...-VQ6-UC-...-B/V...-R8		86							110		11.4				
OVEL-7-H-...-VQ4-UC-...-PNLK...-R8		84							109		10.3			31	
OVEL-10-H-...-VQ6-UC-...-PNLK...-R8		86							111		11.4				
OVEL-7-H-...-VQ4-UC-...-R8		84							108		10.3			2	
OVEL-10-H-...-VQ6-UC-...-R8		86							110		11.4				

Datasheet

Dimensions Download CAD data ➔ www.festo.com

Vacuum generators for UR-Plus gripper

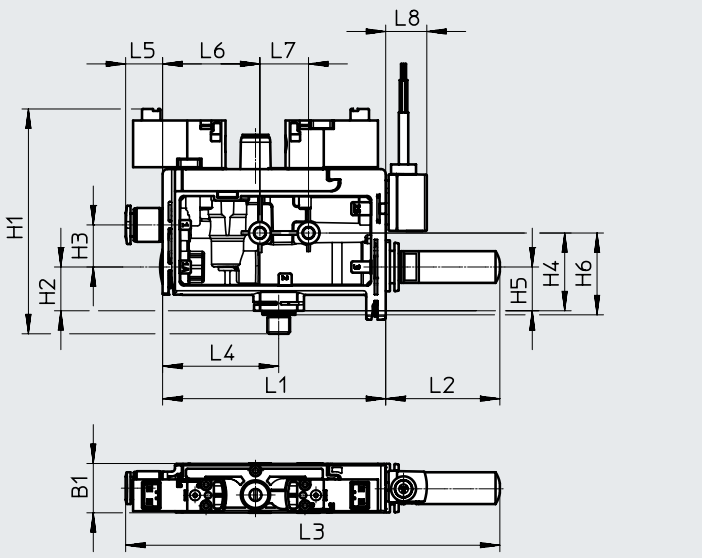

Type	B1 ±0.3	H1 ±0.8	H2 ±0.5	H3 ±0.5	H4 ±0.2	H5 ±0.5	H6 ±0.2	L1 ±0.8	L2 ±0.8	L3 ±2	L4 ±0.5	L5 ±0.5	L6 ±0.2	L7 ±0.2	L8 ±0.8
OVEL-10-...-VM7-UA-C-A-V1V-H3	15.2	62	13.5	13	24	13.5	25.3	68.8	35.5	116	35.8	11.4	30	15	13

Datasheet

Ordering data – high vacuum						
Vacuum sensor pressure measuring range [bar]	Vacuum sensor output signal	Exhaust port	Nominal width of Laval nozzle [mm]	Weight [g]	Part no.	Type
Vacuum generators, for pneumatic links						
–1 ... 0	PNP or NPN or IO-Link®	UC	0.45	78	**8141086**	**OVEL-5-H-10-P-VQ4-UC-C-A-V1PNLK-H3**
			0.7	93	**8141087**	**OVEL-7-H-15-P-VQ4-UC-C-A-V1PNLK-H3**
			0.95	93	**8141089**	**OVEL-10-H-15-P-VQ6-UC-C-A-V1PNLK-H3**
–	–	UC	0.45	44	**8141094**	**OVEL-5-H-10-P-VQ4-UC-C-A-H3**
			0.7	59	**8141095**	**OVEL-7-H-15-P-VQ4-UC-C-A-H3**
			0.95	59	**8141097**	**OVEL-10-H-15-P-VQ6-UC-C-A-H3**
Vacuum generators, for metric QS connections (electrical connection: plug pattern H, vertical plug)						
–1 ... 0	1 ... 5 V	UA	0.45	74	**8049046**	**OVEL-5-H-10-PQ-VQ4-UA-C-A-V1B-H3**
			0.7	89	**8049047**	**OVEL-7-H-15-PQ-VQ4-UA-C-A-V1B-H3**
			0.95	89	**8049048**	**OVEL-10-H-15-PQ-VQ6-UA-C-A-V1B-H3**
	0 ... 10 V	UA	0.45	74	**8049049**	**OVEL-5-H-10-PQ-VQ4-UA-C-A-V1V-H3**
			0.7	89	**8049050**	**OVEL-7-H-15-PQ-VQ4-UA-C-A-V1V-H3**
			0.95	89	**8049051**	**OVEL-10-H-15-PQ-VQ6-UA-C-A-V1V-H3**
	PNP or NPN or IO-Link®	UA	0.45	77	**8049052**	**OVEL-5-H-10-PQ-VQ4-UA-C-A-V1PNLK-H3**
		UA	0.7	92	**8049053**	**OVEL-7-H-15-PQ-VQ4-UA-C-A-V1PNLK-H3**
		UC	0.7	92	**8141092**	**OVEL-7-H-15-PQ-VQ4-UC-C-A-V1PNLK-H3**
		UA	0.95	92	**8049054**	**OVEL-10-H-15-PQ-VQ6-UA-C-A-V1PNLK-H3**
		UC	0.95	92	**8141093**	**OVEL-10-H-15-PQ-VQ6-UC-C-A-V1PNLK-H3**
–1 ... 1	0 ... 10 V	UA	0.45	74	**8069567**	**OVEL-5-H-10-PQ-VQ4-UA-C-A-B2V-H3**
			0.7	89	**8069568**	**OVEL-7-H-15-PQ-VQ4-UA-C-A-B2V-H3**
			0.95	88	**8069569**	**OVEL-10-H-15-PQ-VQ6-UA-C-A-B2V-H3**
	PNP or NPN or IO-Link®	UA	0.45	77	**8069570**	**OVEL-5-H-10-PQ-VQ4-UA-C-A-B2PNLK-H3**
			0.7	92	**8069571**	**OVEL-7-H-15-PQ-VQ4-UA-C-A-B2PNLK-H3**
			0.95	92	**8069572**	**OVEL-10-H-15-PQ-VQ6-UA-C-A-B2PNLK-H3**
–	–	UC	0.45	43	**8141099**	**OVEL-5-H-10-PQ-VQ4-UC-C-A-H3**
			0.7	58	**8141100**	**OVEL-7-H-15-PQ-VQ4-UC-C-A-H3**
			0.95	58	**8142126**	**OVEL-10-H-15-PQ-VQ6-UC-C-A-H3**
Vacuum generators, for metric QS connections (electrical connection: individual plug M8, 3-pin)						
–1 ... 0	0 ... 10 V	UA	0.45	94	**8152243**	**OVEL-5-H-10-PQ-VQ4-UA-C-A-V1V-R8**
			0.7	109	**8152244**	**OVEL-7-H-15-PQ-VQ4-UA-C-A-V1V-R8**
			0.95	109	**8152245**	**OVEL-10-H-15-PQ-VQ6-UA-C-A-V1V-R8**
	PNP or NPN or IO-Link®		0.45	97	**8152240**	**OVEL-5-H-10-PQ-VQ4-UA-C-A-V1PNLK-R8**
			0.7	112	**8152241**	**OVEL-7-H-15-PQ-VQ4-UA-C-A-V1PNLK-R8**
			0.95	112	**8152242**	**OVEL-10-H-15-PQ-VQ6-UA-C-A-V1PNLK-R8**
Vacuum generators for UR-Plus gripper						
–1 ... 0	0 ... 10 V	UA	0.95	88	**8129122**	**OVEL-10-H-15-PQ-VM7-UA-C-A-V1V-H3**

Ordering data – Modular product system

Ordering table

Type	OVEL	Conditions	Code		Enter code
Module no.	**8049045**				
Vacuum generator	Vacuum generator, electropneumatic		**OVEL**		OVEL
Nominal width of Laval nozzle [mm]	0.45		**-5**		
	0.7		**-7**		
	0.95		**-10**		
Ejector characteristic	High vacuum		**-H**		
	High suction rate		**-L**		
Housing size/width [mm]	10	[1]	**-10**		
	15	[2]	**-15**		
Pneumatic connection 1	For pneumatic links via manifold rail		**-P**		
	Push-in connectors, metric		**-PQ**		
Vacuum connection	Push-in connector 3 mm	[3]	**-VQ3**		
	Push-in connector 4 mm	[4]	**-VQ4**		
	Push-in connector 6 mm	[5]	**-VQ6**		
Pneumatic connection 3	Push-in connectors, metric		**-RQ**		
	Open silencer		**-UA**		
	Silencer closed	[8]	**-UC**		
Ejector pulse connection	Via pneumatic connection 1				
	Additional port (as pneumatic connection 1)		**-Z**		
Vacuum valve	Normally closed		**-C**		-C
Additional function	Without ejector pulse				
	Ejector pulse, electrical	[6]	**-A**		
Vacuum sensor pressure measuring range	Without vacuum sensor				
	–1 ... 0 bar		**-V1**		
	–1 ... 1 bar		**-B2**		
Vacuum sensor output signal	Without vacuum sensor				
	1 ... 5 V	[7]	**B**		
	0 ... 10 V	[7]	**V**		
	PNP or NPN or IO-Link®	[7]	**PNLK**		
Electrical connection	Plug pattern H, vertical plug		**-H3**		-H3
	M8 individual plug, 3-pin		**-R8**		

[1] 10 Not with Laval nozzle nominal width 7, 10.
[2] 15 Not with Laval nozzle nominal width 5.
[3] VQ3 Only with Laval nozzle nominal width 5.
[4] VQ4 Only with Laval nozzle nominal width 5 or Laval nozzle nominal width 7 in combination with ejector characteristic H.
[5] VQ6 Only with Laval nozzle nominal width 10 or Laval nozzle nominal width 7 in combination with ejector characteristic L.
[6] A Mandatory information in combination with ejector pulse port Z.
[7] B, V, PNLK Mandatory information in combination with vacuum sensor pressure measuring range B2, V1.
[8] UC Only with vacuum type H, high vacuum

Accessories

Common supply manifold OABM-P
For vacuum generator
OVEL-...-P

- Up to 8 vacuum generators OVEL on a common supply manifold
- Common compressed air supply via common supply manifold

Note

On the common supply manifold, vacuum generators with an additional port for the ejector pulse (OVEL-...-Z-C-A) cannot be combined with vacuum generators without an additional port (OVEL-...-C-A).

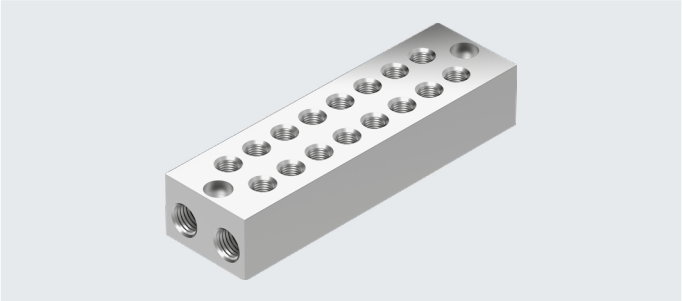

General technical data		
Pneumatic connection 1		G1/8
Type of mounting		With through-hole
Min. tightening torque	[Nm]	0.3
Max. tightening torque	[Nm]	3.3

Operating and environmental conditions	
Corrosion resistance class CRC[1)]	2 - Moderate corrosion stress

1) More information www.festo.com/x/topic/crc

Materials	
Sub-base	Wrought aluminium alloy
Note on materials	RoHS-compliant
LABS (PWIS) conformity	VDMA24364-B1/B2-L

Dimensions Download CAD data ➔ www.festo.com

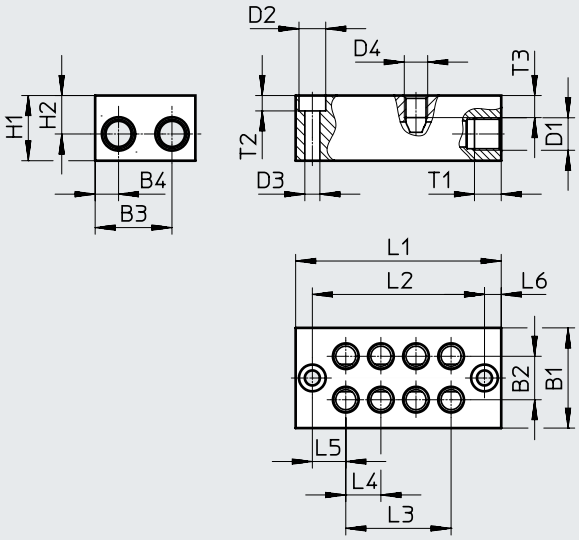

Type	B1	B2	B3	B4	D1	D2 ø	D3 ø	D4	H1	H2	L1	L2	L3	L4	L5	L6	T1	T2	T3
OABM-P-G3-10-2	30	13	23	7	G1/8	8	4.5	M7	19.5	11.5	40.5	30.5	10.5	10.5	10	5	8	4.6	6.6
OABM-P-G3-10-4											61.5	51.5	31.5						
OABM-P-G3-10-8											103.5	93.5	73.5						
OABM-P-G3-15-2	30	13	23	7	G1/8	8	4.5	M7	19.5	11.5	51.5	41.5	15.5	15.5	13	5	8	4.6	6.6
OABM-P-G3-15-4											82.5	72.5	46.5						
OABM-P-G3-15-8											144.5	134.5	108.5						

Accessories

Dimensions Download CAD data ➔ www.festo.com

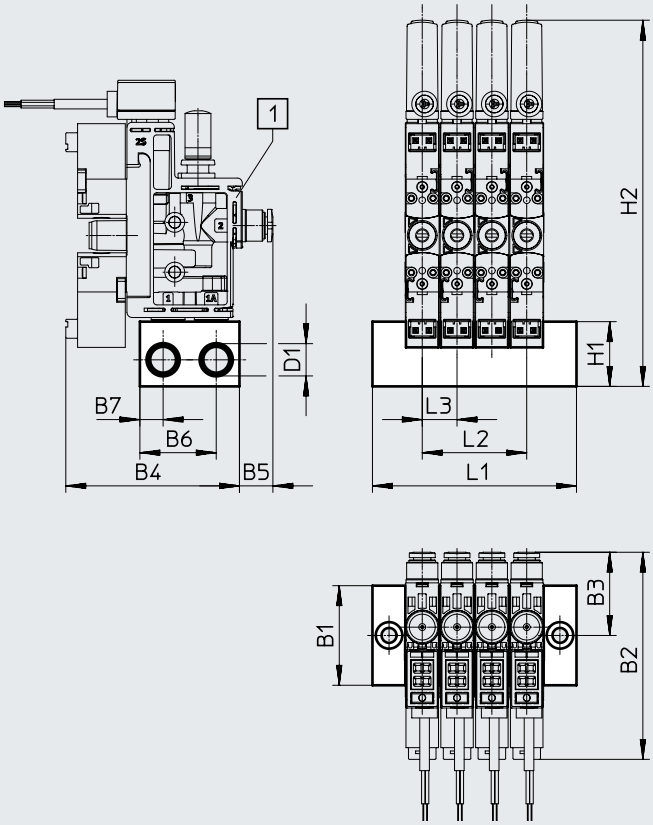

Note

Combined allocation with OVEL-5 and OVEL-7/-10 is possible only with common supply manifolds OABM-...-15.

Use mounting kit OABM-MK for mounting the OVEL on the common supply manifold.
Min. tightening torque: 0.3 Nm
Max. tightening torque: 3.3 Nm

[1] Vacuum generator OVEL-5/7/10

Type		B1	B2	B3	B4	B5	B6	B7	D1	H1	H2	L1	L2	L3
OABM-P-G3-10-2	with OVEL-5	30	62	25	52	10	23	7	G1/8	19.5	110	40.5	10.5	10.5
OABM-P-G3-10-4												61.5	31.5	
OABM-P-G3-10-8												103.5	73.5	
OABM-P-G3-15-2	with OVEL-7/10	30	74	31	57	16	23	7	G1/8	19.5	125	51.5	15.5	15.5
OABM-P-G3-15-4												82.5	46.5	
OABM-P-G3-15-8												144.5	108.5	

Ordering data

Common supply manifold	Number of device positions	CRC[1)]	Weight [g]	Part no.	Type
For OVEL-5	2	2	45.2	**8049141**	**OABM-P-G3-10-2**
	4	2	69.6	**8049142**	**OABM-P-G3-10-4**
	8	2	118.6	**8049143**	**OABM-P-G3-10-8**
For OVEL-5/7/10	2	2	59.6	**8049144**	**OABM-P-G3-15-2**
	4	2	97.1	**8049145**	**OABM-P-G3-15-4**
	8	2	172	**8049146**	**OABM-P-G3-15-8**

1) More information www.festo.com/x/topic/crc

Accessories

Mounting kit OABM-MK

For common supply manifold OABM-P

General technical data		
Type of mounting		Via retaining clips
		Can be screwed onto manifold rail
Min. tightening torque	[Nm]	0.3
Max. tightening torque	[Nm]	3.3

Operating and environmental conditions	
Corrosion resistance class CRC [1]	2 - Moderate corrosion stress

1) More information www.festo.com/x/topic/crc

Materials	
Hollow bolt	Wrought aluminium alloy
Seals	NBR
Note on materials	RoHS-compliant
LABS (PWIS) conformity	VDMA24364-B1/B2-L

Ordering data

	Weight [g]	Part no.	Type
For common supply manifold OABM-P	7	**8065850**	**OABM-MK-G3**

Accessories

Vacuum filter OAFF

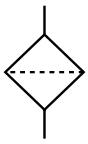

Operating pressure
–95 ... 0 kPa

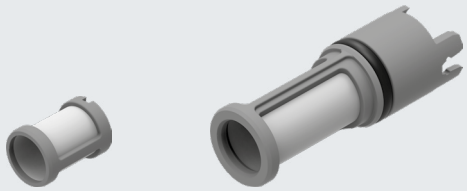

OAFF-G3-5 OAFF-G3-7

General technical data		
Type of mounting		Push-on
		Snap-in
Grade of filtration	[µm]	40
Ejector pulse suitability	[bar]	≤7

Operating and environmental conditions		
Operating pressure	[kPa]	–95 ... 0
	[bar]	–0.95 ... 0
	[psi]	–13.775 ... 0
Operating medium		Atmospheric air based on ISO 8573-1:2010 [7:–:–]
Ejector pulse suitability	[MPa]	0.7
	[bar]	7
	[psi]	101.5

Materials		
Type	OAFF-G3-5	OAFF-G3-7
Housing	POM	
Filter	Fabric, PA	
Seals	–	NBR
Note on materials	RoHS-compliant	
LABS (PWIS) conformity	VDMA24364-B1/B2-L	

Ordering data	Weight [g]	Part no.	Type	PU[1)]
For vacuum generator OVEL-5	1	**8068944**	**OAFF-G3-5**	**10**
For vacuum generator OVEL-7/10	1.5	**8068945**	**OAFF-G3-7**	**10**

1) Packaging unit

Accessories

Pressure transmitter SPTE
(Order code in modular product system: OVEL-...-V1B/V1V/B2B/B2V, OVTL-...-V)

- Pressure measuring ranges –1 ... 0 bar or –1 ... 1 bar
- Analogue outputs 1 ... 5 V or 0 ... 10 V

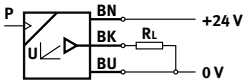

Detection of analogue signals and conversion into digital signals with downstream signal converter SCDN with LCD display (➔ page 23).

General technical data	
Certification	RCM
	c UL us - Recognized (OL)
CE marking (see declaration of conformity)[1]	To EU EMC Directive To EU RoHS Directive
UKCA marking (see declaration of conformity)[1]	To UK EMC regulations To UK RoHS regulations
Note on materials	RoHS-compliant
LABS (PWIS) conformity	VDMA24364-B2-L

1) More information: www.festo.com/catalogue/spte ➔ Support/Downloads.
If the devices are subject to usage restrictions in residential, commercial or light-industrial environments, further measures for the reduction of the emitted interference may be necessary.

Input signal/measuring element			
Type		SPTE-V1R	SPTE-B2R
Measured variable		Relative pressure	
Measurement method		Piezoresistive pressure sensor	
Pressure measuring range start value	[bar]	0	–1
Pressure measuring range end value	[bar]	–1	1
Max. overload pressure	[bar]	5	5
Operating medium		Compressed air to ISO 8573-1:2010 [7:4:4]	
Note on the operating/pilot medium		Lubricated operation possible	
Temperature of medium	[°C]	0 ... 50	
Ambient temperature	[°C]	0 ... 50	

Output, general		
Accuracy ±FS[1]	[%]	3 (at room temperature of approx. 23 °C)
		4 (in ambient temperature range 0 ... 50 °C)
Repetition accuracy ±FS[1]	[%]	0.3
Temperature coefficient ±FS/K[1]	[%]	0.05

1) % FS = % of the measuring range (full scale)

Analogue output			
Type		SPTE-...-V-2.5K	SPTE-...-B-2.5K
Analogue output	[V]	0 ... 10	1 ... 5
Rise time	[ms]	1	
Min. load resistance of voltage output	[kΩ]	15	

Accessories

Output, additional data	
Short circuit current rating	For all electrical connections

Electronics		
Type	SPTE-...-V-2.5K	SPTE-...-B-2.5K
Operating voltage range DC [V]	18 ... 30	10 ... 30
Reverse polarity protection	For all electrical connections	

Electromechanics	
Electrical connection	Cable, 3-core, open end
Cable length [m]	2.5

Mechanical components	
Type of mounting	Pin-type connection
Mounting position	Any
Pneumatic connection	Cartridge 10 mm
Product weight [g]	35
Information on housing materials	Reinforced PA

Immission/Emission	
Degree of protection	IP40
Corrosion resistance class CRC[1)]	2

1) More information www.festo.com/x/topic/crc

Dimensions Download CAD data ➔ www.festo.com

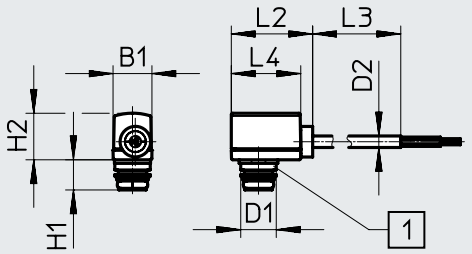

[1] Pressure supply port: pin-type cartridge 10 mm

Type	B1	D1 ⌀	D2 ⌀	H1	H2	L2	L3	L4
SPTE-...-PC10	9.8	8.9	2.9	7.6	11.7	20.5	2500	17.5

Ordering data

Pneumatic connection	Electrical connection	Pressure measuring range [bar]	Analogue output [V]	Order code in the modular product system OVEL	OVTL	Part no.	Type
Cartridge 10 mm	Cable, 3-core, open end	–1 ... 0	0 ... 10	V1V	V	**8025974**	**SPTE-V1R-PC10-V-2.5K**
			1 ... 5	V1B	–	**8025975**	**SPTE-V1R-PC10-B-2.5K**
		–1 ... 1	0 ... 10	B2V	–	**8025976**	**SPTE-B2R-PC10-V-2.5K**
			1 ... 5	B2B	–	**8025977**	**SPTE-B2R-PC10-B-2.5K**

Accessories

Pressure sensor SPAE
(Order code in the modular product system: OVEL-...-V1PNLK/B2PNLK, OVTL-...-PNLK)

- Pressure measuring ranges –1 ... 0 bar or –1 ... 1 bar
- Switching output PNP/NPN, switchable
- IO-Link®
- LCD display
- Teach function

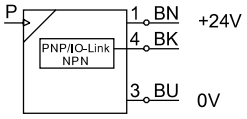

General technical data	
Certification	RCM
	c UL us - Recognized (OL)
CE marking (see declaration of conformity)[1]	To EU EMC Directive To EU RoHS Directive
UKCA marking (see declaration of conformity)[1]	To UK EMC regulations To UK RoHS regulations
Note on materials	RoHS-compliant
LABS (PWIS) conformity	VDMA24364-B2-L

1) More information: www.festo.com/catalogue/spae → Support/Downloads.
If the devices are subject to usage restrictions in residential, commercial or light-industrial environments, further measures for the reduction of the emitted interference may be necessary.

Input signal/measuring element			
Type		SPAE-V1R	SPAE-B2R
Measured variable		Relative pressure	
Measurement method		Piezoresistive pressure sensor	
Pressure measuring range start value	[bar]	0	–1
Pressure measuring range end value	[bar]	–1	1
Max. overload pressure	[bar]	5	5
Operating medium		Compressed air to ISO 8573-1:2010 [7:4:4]	
Note on the operating/pilot medium		Lubricated operation possible	
Temperature of medium	[°C]	0 ... 50	
Ambient temperature	[°C]	0 ... 50	

Signal processing	
Resolution ADC	10 bits

Output, general		
Accuracy ±FS[1]	[%]	1.5 (at room temperature of approx. 23 °C)
		2.5 (in ambient temperature range 0 ... 50 °C)
Repetition accuracy ±FS[1]	[%]	0.3
Temperature coefficient ±FS/K[1]	[%]	0.05

1) % FS = % of the measuring range (full scale)

Switching output	
Switching output	PNP/NPN switchable
Switching function	Freely programmable
Switching element function	N/C or N/O, switchable
Max. output current [mA]	100

Accessories

Measured value display		
Display range start value	[% FS]	0
Display range end value	[% FS]	99

Output, additional data	
Short circuit current rating	For all electrical connections

Communication interface	
Protocol	IO-Link®
IO-Link®, protocol version	Device V 1.1
IO-Link®, profile	Smart sensor profile
IO-Link®, function classes	Binary data channel (BDC)
	Diagnostics
	Identification
	Process data variable (PDV)
	Teach channel
IO-Link®, communication mode	COM2 (38.4 kBd)
IO-Link®, SIO mode support	Yes
IO-Link®, port class	A
IO-Link®, process data width OUT	0 bytes
IO-Link®, process data width IN	2 bytes
IO-Link®, process data contents IN	2 bit BDC (pressure monitoring)
	14 bit PDV (pressure measured value)
IO-Link®, minimum cycle time [ms]	3
IO-Link®, data memory required	0.5 KB

Electronics		
Operating voltage range DC	[V]	18 ... 30
Reverse polarity protection		For all electrical connections

Electromechanics		
Electrical connection		Cable, 3-core, open end
Cable length	[m]	2.5

Mechanical components		
Type of mounting		Pin-type connection
Mounting position		Any
Pneumatic connection		Cartridge 10 mm
Product weight	[g]	40
Information on housing materials		Reinforced PA

Display/operation		
Display type		LED display, 2-digit
Displayable units		% FS
Switching status indication		Yellow LED
Setting options		Via display and keys, teach-in, IO-Link®
Threshold-value setting range	[%]	1 ... 98
Protection against tampering		PIN code

Accessories

Immission/Emission	
Degree of protection	IP40
Corrosion resistance class CRC[1)]	2

1) More information www.festo.com/x/topic/crc

Dimensions Download CAD data ➔ www.festo.com

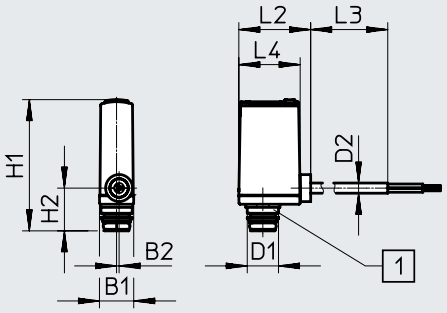

[1] Pressure supply port: pin-type cartridge 10 mm

Type	B1	B2	D1 ⌀	D2 ⌀	H1	H2	L2	L3	L4
SPAE-...-PC10	9.8	0.7	8.9	2.9	~37.5	12.2	20.5	2500	17.5

Ordering data

Pneumatic connection	Electrical connection	Pressure measuring range [bar]	Order code in the modular product system		Part no.	Type
			OVEL	OVTL		
Cartridge 10 mm	Cable, 3-core, open end	–1 ... 0	V1PNLK	PNLK	**8025978**	**SPAE-V1R-PC10-PNLK-2.5K**
		–1 ... 1	B2PNLK	–	**8025979**	**SPAE-B2R-PC10-PNLK-2.5K**

Accessories

Ordering data – Plug NECU-S-M8G3/M12G3

Datasheets → Internet: necu

	Electrical connection	Part no.	Type
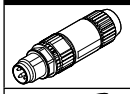	Plug M8x1, 3-pin, straight, insulation displacement connector	**562024**	**NECU-S-M8G3-HX**
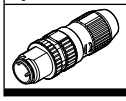	Plug M12x1, A-coded, 3-pin, straight, insulation displacement connector	**562027**	**NECU-S-M12G3-HX**

Ordering data – Plug NECU-S-ECG4

Datasheets → Internet: necu

	Electrical connection	Part no.	Type
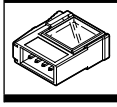	Plug, square design, 4-pin, straight, insulation displacement connector	**570922**	**NECU-S-ECG4-HX-Q3**

Ordering data – Signal converter SCDN

Datasheets → Internet: scdn

	Measured variable	Part no.	Type
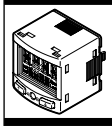	Voltage	**8035555**	**SCDN-2V-EC4-PNLK-L1**

Ordering data – Plug socket with cable NEBV

Datasheets → Internet: nebv

	Electrical connection		Cable length [m]	Part no.	Type
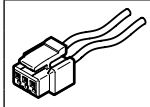	2-pin socket Plug pattern H	Flying leads Open end	0.5	**566654**	**NEBV-H1G2-KN-0.5-N-LE2**
			1	**566655**	**NEBV-H1G2-KN-1-N-LE2**
			2.5	**566656**	**NEBV-H1G2-KN-2.5-N-LE2**
			5	**566657**	**NEBV-H1G2-KN-5-N-LE2**
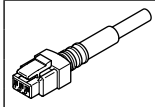	2-pin socket Plug pattern H	Cable Open end	0.5	**566658**	**NEBV-H1G2-P-0.5-N-LE2**
			1	**566659**	**NEBV-H1G2-P-1-N-LE2**
			2.5	**566660**	**NEBV-H1G2-P-2.5-N-LE2**
			5	**566661**	**NEBV-H1G2-P-5-N-LE2**

Ordering data – Connecting cable NEBA

Datasheets → Internet: neba

	Electrical connection	Number of cores	Cable length [m]	Part no.	Type
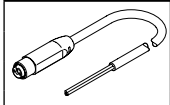	M8x1, straight socket	3	1	**8078222**	**NEBA-M8G3-U-1-N-LE3**
			2,5	**8078223**	**NEBA-M8G3-U-2.5-N-LE3**
			5	**8078224**	**NEBA-M8G3-U-5-N-LE3**
	Ø8 mm, straight socket (snap-locking)		2,5	**8078264**	**NEBA-M8CG3-U-2.5-N-LE3**
			5	**8078265**	**NEBA-M8CG3-U-5-N-LE3**
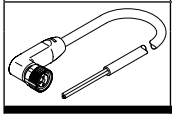	M8x1, angled socket		2,5	**8078230**	**NEBA-M8W3-U-2.5-N-LE3**
			5	**8078231**	**NEBA-M8W3-U-5-N-LE3**

Ordering data – Blanking plug B

	Pneumatic connection	Part no.	Type	PU[1]
	M7	**174309**	**B-M7**	**10**
	G1/8	**3568**	**B-1/8**	**10**

1) Packaging unit.

Ordering data – Push-in fitting QS

	Pneumatic connection		Part no.	Type	PU[1]
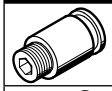	G1/8	Tubing O.D. 8 mm	**186098**	**QS-G1/8-8**	**10**
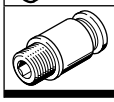	G1/8	Tubing O.D. 8 mm	**186109**	**QS-G1/8-8-I**	**10**

1) Packaging unit.