ELGS-TB

Toothed belt axis unit

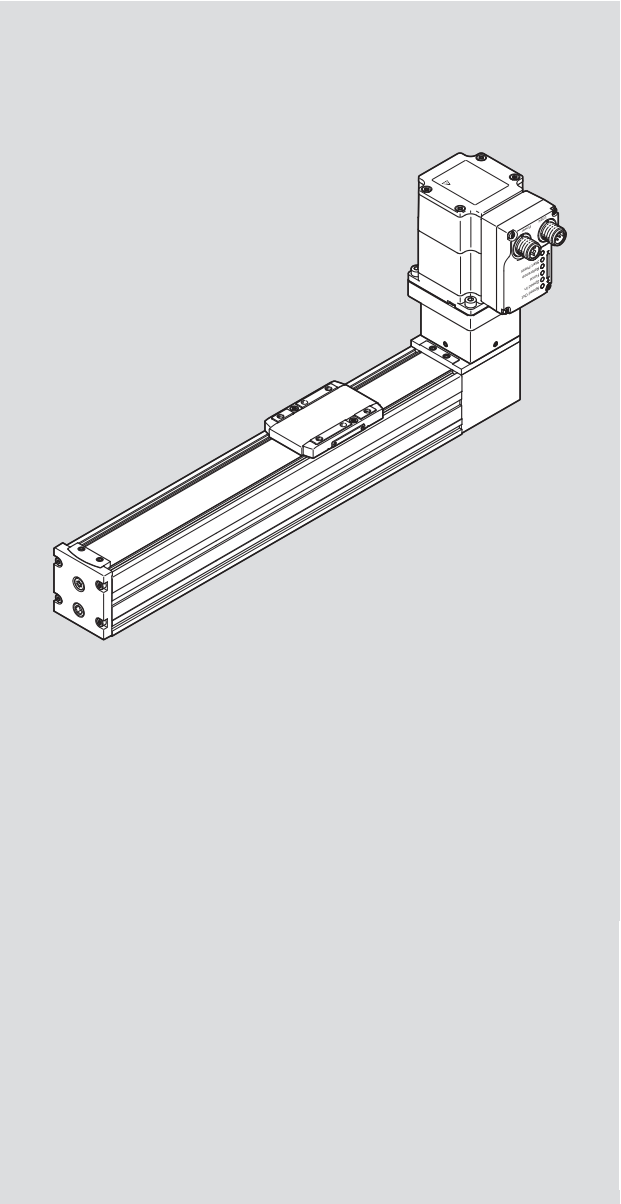

FESTO

Operating instruction

8222396

8222396
2024-08e
[8222398]

Original instructions

IO-Link is a registered trademark of its respective trademark holder in certain countries.

Table of contents

1 About this document ... 4
1.1 Applicable documents ... 4
1.2 Product version ... 4
2 Safety ... 4
2.1 Safety instructions ... 4
2.2 Intended use ... 4
2.3 Training of qualified personnel ... 5
3 Additional information ... 5
4 Product overview ... 5
4.1 Scope of delivery ... 5
4.2 System overview ... 5
4.2.1 Product design ... 6
4.3 Function ... 6
5 Transport ... 7
6 Mounting ... 7
7 Installation ... 7
8 Commissioning ... 10
8.1 Commissioning: DIO operation (digital I/O) ... 11
8.2 Commissioning: IO-Link operation ... 12
9 Operation ... 13
9.1 Master control ... 13
9.2 Dimension reference system ... 13
9.3 Restart with homing ... 14
9.4 HMI display and control elements ... 16
9.5 Homing with end position determination ... 18
9.6 Point-to-point operating modes ... 19
10 Malfunctions ... 22
10.1 Repair ... 24
11 Replacement ... 24
12 Removal ... 25
13 Technical data ... 26

1 About this document

1.1 Applicable documents

All available documents for the product ➔ www.festo.com/sp.

Document	Product
Operating instruction	Integrated drive EMCS-ST
Operating instruction	Toothed belt axis ELGC-TB
Assembly instructions	Axial kit EAMM-A
Assembly instructions	Adapter NEFC-M12G8-0.3-M12G5-LK

Tab. 1: Applicable documents for the product

1.2 Product version

This documentation refers to the following datasets:
- Hardware version of the integrated drive from "Rev04" or "RevD"
- Firmware version of the integrated drive from "v19.0.4.107_release"
- IO-Link device description file (IODD) from V1.2.6
- Adapter NEFC from production date 01/2022

When using a different hardware version or firmware version, check whether a corresponding version of the documentation is available ➔ www.festo.com/sp.

2 Safety

2.1 Safety instructions

- Observe the identifications on the product.
- Before working on the product, switch off the power supply and secure it against being switched on again.
- Store the product in a cool, dry environment protected from UV and corrosion. Keep storage times short.
- Observe the tightening torques. Unless otherwise specified, the tolerance is ± 20%.

2.2 Intended use

The toothed belt axis unit ELGS-TB positions payloads between two end positions or drives external guides.
The toothed belt axis unit ELGS-TB is approved for slide operation.

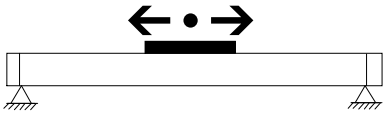

Fig. 1: Slide operation

2.3 Training of qualified personnel

Work on the product may only be carried out by qualified personnel who can evaluate the work and detect dangers. The qualified personnel have knowledge and experience in dealing with electric drive systems.

3 Additional information

- Contact the regional Festo contact if you have technical problems ➔ www.festo.com.
- Accessories and spare parts ➔ www.festo.com/catalogue.

4 Product overview

4.1 Scope of delivery

The following components are included in the scope of delivery:
- Toothed belt axis unit ELGS-TB
- Operating instructions for toothed belt axis unit ELGS-TB
- Adapter for IO-Link operation (optional accessory) ➔ www.festo.com/catalogue

4.2 System overview

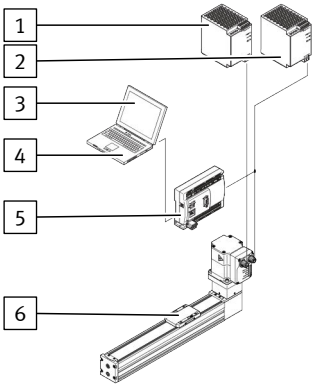

1 PELV fixed power supply for load voltage

2 PELV fixed power supply for logic voltage

3 Application software

4 PC or laptop

5 Controller or IO-Link master

6 Toothed belt axis unit ELGS-TB

Fig. 2: System overview ELGS-TB

4.2.1 Product design

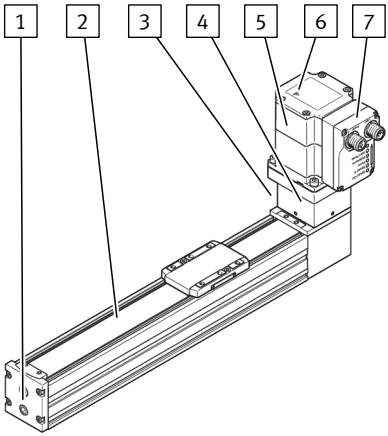

1 Sealing air connection
2 Toothed belt axis ELGC-TB
3 Product labelling
4 Axial kit EAMM
5 Integrated drive EMCS-ST
6 Warning symbol "Attention! Hot surface"
7 Controller housing

Fig. 3: Product design ELGS-TB

Electrical connections, display elements and HMI control elements

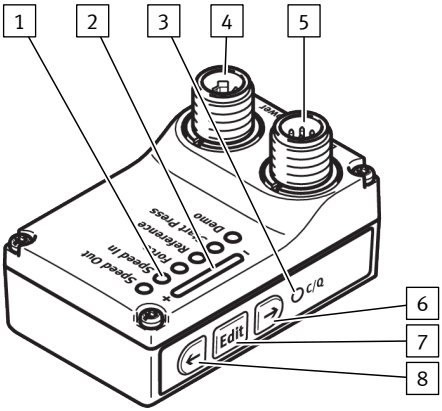

1 LED display menu (Speed Out, ..., Demo)
2 LED parameter display
3 LED C/Q
4 Load voltage connection [Power]
5 Logic voltage connection and digital I/O or IO-Link connections [Logic]
6 Pushbutton actuator (right arrow)
7 Pushbutton actuator (Edit)
8 Pushbutton actuator (left arrow)

Fig. 4: Electrical connections, display elements and HMI control elements

4.3 Function

The toothed belt axis unit converts the rotary motion of the mounted motor into a linear motion of the slide. The toothed belt drive converts the torque of the motor into a feed force. The linear movement of the slide is precisely guided by the guide.

5 Transport

NOTICE

Unexpected and unbraked movement of components

- Secure moving components for transport.

1. Take product weight into account ➔ 13 Technical data.
2. Maintain support clearance ≤ 300 mm when attaching transportation aids.

6 Mounting

⚠ WARNING

Risk of injury due to unexpected movement of components.

The drive can move freely in the voltage-free state. This can cause unexpected movements of the connected mechanics and crush parts of the body.

- Bring moving parts of the mechanical system into a safe position.

- Mounting product ➔ Operating instructions for toothed belt axis ELGC-TB.

7 Installation

⚠ WARNING

Risk of injury due to electric shock.

- For the electrical power supply with extra-low voltages, use only PELV circuits that guarantee a reinforced isolation from the mains network.
- Observe IEC 60204-1/EN 60204-1.

ⓘ

Damage to the device due to non-approved potentials at the pins

- Power connection:
  - Do not connect pin 3
- GND and L– connections:
  - Apply the Power, GND [Pin 2] and Logic, GND/L– [Pin 4/8] connections to one potential.
    For example, ensure the same potential by using a common fixed power supply or an electrical connection of the two 0 V DC GND potentials.

ⓘ

When using hardware version "Rev02" or "RevB" or older, check additional precautionary measures to avoid damage to the device due to impermissible potentials on the pins in the corresponding version of the documentation ➔ www.festo.com/sp

1. Connect the power cable to the [Power] connection of the integrated drive EMCS-ST and to a PELV fixed power supply.
2. Connect the logic cable to the [Logic] connection of the integrated drive EMCS-ST and to a controller or to a IO-Link master.

Wiring diagram: DIO operation (digital I/O)

In NPN mode defined levels must be applied to the DI1/DI2 digital inputs of the EMCS, e.g. by controller outputs with pull-up resistors (4.3 kΩ recommended).

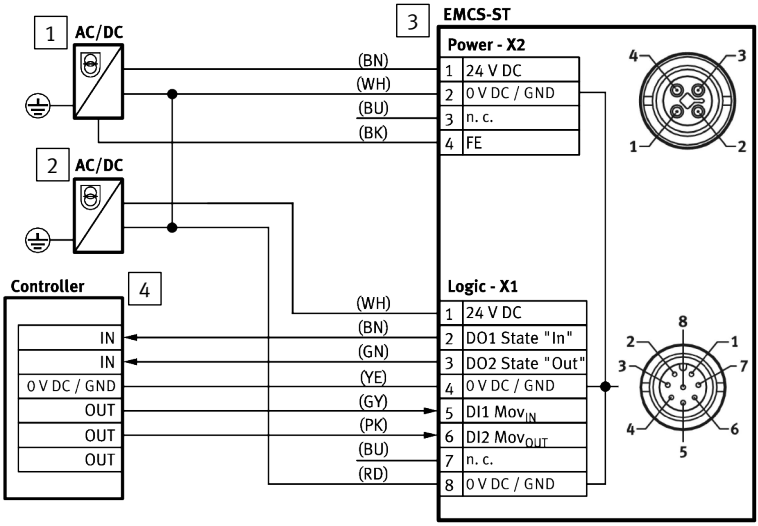

Fig. 5: Wiring diagram: DIO operation (digital I/O)

1 PELV fixed power supply for the load voltage supply

2 PELV fixed power supply for the logic power supply

3 Integrated drive EMCS-ST

4 Higher-order controller with digital I/O

Status and control signals

The following table shows the status and control signals and the electrical levels of the digital inputs and outputs as a function of the "PNP/NPN" version of the integrated drive.

Status and control signal	Electrical levels	
	PNP, positive logic	NPN, negative logic
0	Low level (0 V)	High level (24 V)
1	High level (24 V)	Low level (0 V)

Tab. 2: Overview of status and control signals as a function of electrical levels

Wiring diagram: IO-Link operation

Current consumption of IO-Link power supply [Logic]

An input current at pin 1 (L+) of 100 … 150 mA is required for operation.

Connecting IO-Link directly to the master

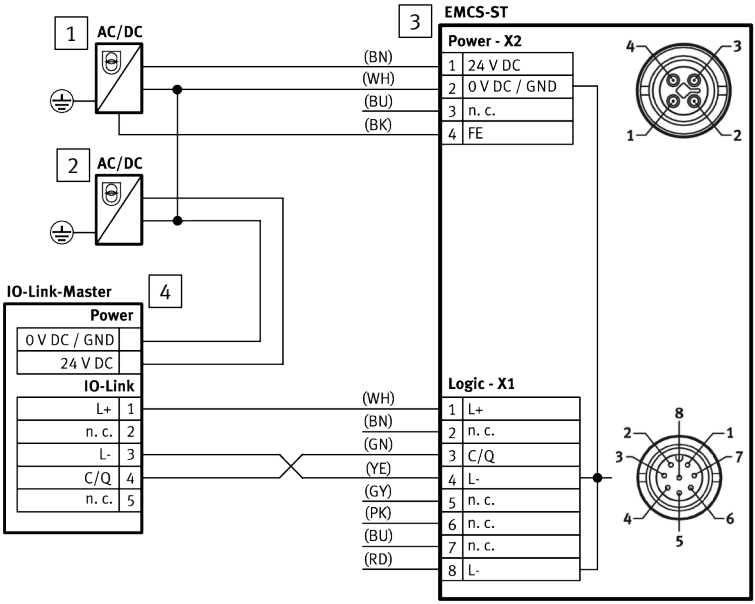

Fig. 6: Wiring diagram: IO-Link operation

1 PELV fixed power supply for the load voltage supply

2 PELV fixed power supply for the logic power supply

3 Integrated drive EMCS-ST

4 IO-Link master with IO-Link interface, port class A

Connecting IO-Link IO-Link to the master via adapter NEFC

Adapter NEFC up to production date 2021

Adapters NEFC up to production date 2021 can only be used for IO-Link masters with port class A.

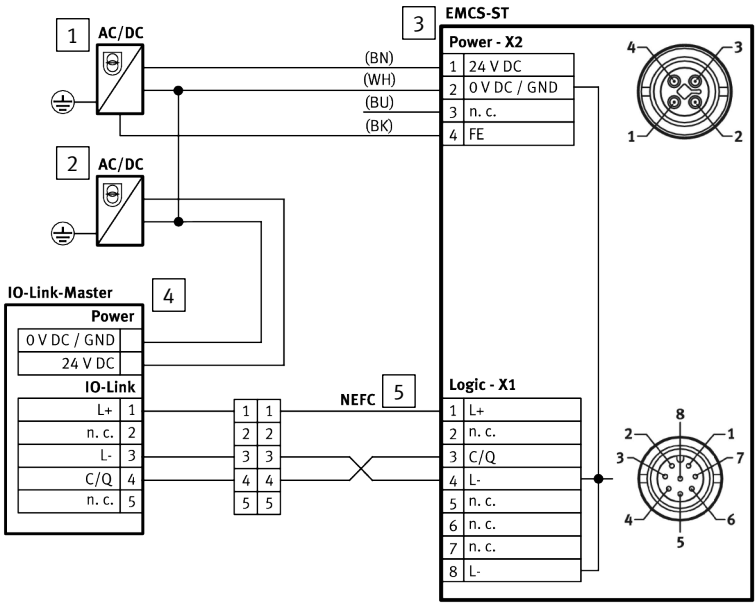

Fig. 7: Wiring diagram: IO-Link operation via adapter NEFC

1 PELV fixed power supply for the load voltage supply

2 PELV fixed power supply for the logic power supply

3 Integrated drive EMCS-ST

4 IO-Link master with IO-Link interface

5 Adapter NEFC

Core colours of Festo cables:
BK = black, BN = brown, BU = blue, GN = green, GY = grey, PK = pink, WH = white, YE = yellow

---

8 Commissioning

⚠ WARNING

Risk of injury due to unexpected movement of components.

- Protect the positioning range from unwanted intervention.
- Keep foreign objects out of the positioning range.
- Perform commissioning with low dynamic response.

⚠ WARNING

Severe, irreversible injuries from accidental movements of the connected actuator technology.

Unintentional movements of the connected actuator technology can result from exchanging the connecting cables of a servo drive or between servo drives.

- Before commissioning: All cables must be correctly assigned and connected.

⚠ WARNING

Danger of burns from hot housing surfaces.

Metallic housing parts can reach high temperatures during operation.

Contact with metal housing parts can cause burn injuries.

- Do not touch metallic housing parts.
- After the power supply is switched off, let the device cool down to room temperature.

Update device data only with IO-Link.

- Updating firmware
- Updating parameter set
- Data backup (Data Storage)

➔ Instruction manual for "Integrated drive EMCS" ➔ www.festo.com/sp

8.1 Commissioning: DIO operation (digital I/O)

Preparation:

1. Check mounting of the drive system.
2. Check wiring of the power supplies and the "DI/DO" digital inputs and outputs at the [Power] and [Logic] connections.

When using hardware version "Rev02" or "RevB" or older, check additional precautionary measures to avoid damage to the device due to impermissible potentials on the pins in the corresponding version of the documentation ➔ www.festo.com/sp

Procedure:

1. Switch on load voltage.
2. Switch on logic voltage via IO-Link master. A switch-on delay of ≥50 ms is recommended.
   ↳ If the logic voltage is switched on before the load voltage, the EMCS-ST starts with an error that must be acknowledged.
3. Wait for initialisation until C/Q LED is yellow (≈ 7 s).
4. Select the reference end position "Ref" from the HMI interface in the "Reference" menu and start the homing with end position detection (only required if the reference end position "Ref" is different from the factory setting or if the useful range has been changed). The drive system is referenced after a successful homing.

   Referencing sets the start press position "$Pos_{Start\ Press}$" equal to the calculated useful range.

5. Parameterisation of operating modes via HMI interface:
   Basic parameters for point-to-point operation with and without press function or manual operation (demo)
   – "Speed Out" speed
   – "Speed In" speed
   additional parameters for point-to-point operation with press function
   – "Force"
   – Start Press "$Pos_{Start\ Press}$" position (reference point end position "Ref")

The EMCS-ST is then ready for operation and the application can be controlled via the "DI/DO" digital inputs and outputs ➔ 9.6 Point-to-point operating modes.

8.2 Commissioning: IO-Link operation

Preparation

1. Check mounting of the drive system.
2. Check the wiring of the power supplies and the IO-Link "C/Q" interface at the [Power] and [Logic] connections.

When using hardware version "Rev02" or "RevB" or older, check additional precautionary measures to avoid damage to the device due to impermissible potentials on the pins in the corresponding version of the documentation ➔ www.festo.com/sp

---

Procedure

1. Switch on load voltage.
2. Switch on logic voltage via IO-Link master. A switch-on delay of ≥50 ms is recommended.
   ↳ If the logic voltage is switched on before the load voltage, the EMCS-ST starts with an error that must be acknowledged.
3. Wait for initialisation until C/Q LED is yellow (≈ 7 s).
4. Select the reference end position "Ref" from the IO-Link device data (0x0103.0, reference) and start the homing with end position detection (0x0104.0, Execute "Reference" Movement) (only required if the reference end position Ref" is different from the factory setting or if the useful range has been changed). The drive system is referenced after a successful homing.

   Homing sets the "Pos_{Imp}" intermediate position and the "$Pos_{Start\ Press}$" start press position equal to the determined useful range.

   ---

5. Parameterisation of operating modes via IO-Link interface:
   Basic parameters for point-to-point operation with and without press function or manual operation (demo)
   - 0x0100.0, "Speed In" speed
   - 0x0101.0: "Speed Out" speed
   - 0x0106.0, end position "Out" "Lim_{Out}" (reference point reference end position "Ref")
   - 0x0108.0, intermediate position "Pos_{Imp}" (reference point reference end position "Ref")
   additional parameters for point-to-point operation with press function
   - 0x0102.0, "Force" force
   - 0x0105.0, start press position "$Pos_{Start\ Press}$" (reference point reference end position "Ref")

Then the EMCS-ST is ready for operation and the application can be controlled via the IO-Link interface "process data 0x0029.1, 0x0029.2 and 0x0029.5" or "system parameter 0x0002" ➔ 9.6 Point-to-point operating modes.

9 Operation

⚠ WARNING

Danger of burns from hot housing surfaces.
Metallic housing parts can reach high temperatures during operation.
Contact with metal housing parts can cause burn injuries.
- Do not touch metallic housing parts.
- After the power supply is switched off, let the device cool down to room temperature.

9.1 Master control

- Lowest priority: DIO operation (after Power ON and initialisation)
- Medium priority: IO-Link operation (after established IO-Link communication)
- Highest priority: HMI operation (unlocked pushbutton actuators)

9.2 Dimension reference system

The correct positioning of the drive requires a defined dimension reference system.

Linear drive system
Ref ⊕: reference end position (reference point for Lim_{In}, Lim_{Out}, Pos_{Act}, Pos_{Imp} and $Pos_{Start\ Press}$) – motor facing (default) – motor facing away Lim_{In}/Lim_{Out} ⟧⟦: end positions $Mech_{In}$/$Mech_{Out}$: mechanical stops Pos_{Act} ⊕: current position Pos_{Imp}: intermediate position (IO-Link only) $Pos_{Start\ Press}$: Start Press position
HMI: Reference + ○ ○ ○ ○ ☀ I IO-Link: 0x0103.0 = false (default) 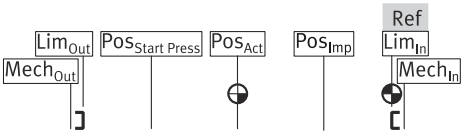   HMI: Reference + ☀ ○ ○ ○ ○ I IO-Link: 0x0103.0 = true 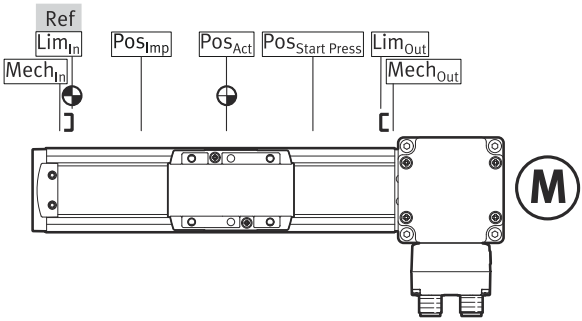

Tab. 3: Dimension reference system for linear drive systems

9.3 Restart with homing

Re-initialise reference end position "Ref"

The referencing of the reference end position is lost on Power OFF of the logic voltage L_+ [Logic, Pin 1]. After every restart the position of the reference end position "Ref" is re-initialised at the "Speed Ref" velocity with the first motion task.

Homing after a restart as a function of the positioning task

Sequence

- Mov_{Ref}: force-controlled movement $Ctrl_F$ ➔ against mechanical stop "$Mech_{In}$"
- Mov_{Out}: position-controlled movement $Ctrl_P$ ⇨ to the reference end position "Ref"
- Travel to the target position as a function of the positioning task
  - No travel, end position "Lim_{In}" reached
  - Mov_{Out}: position-controlled movement $Ctrl_P$ ⇨ to the end position Lim_{Out}
  - Mov_{Imp}: position-controlled travel $Ctrl_P$ ⇨ to the intermediate position Lim_{Imp} (IO-Link only)

$Start_{In}$ positioning task to the end position Lim_{In}

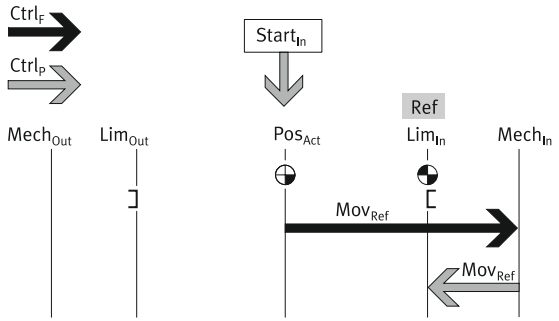

$Start_{Out}$ positioning task to the end position Lim_{Out}

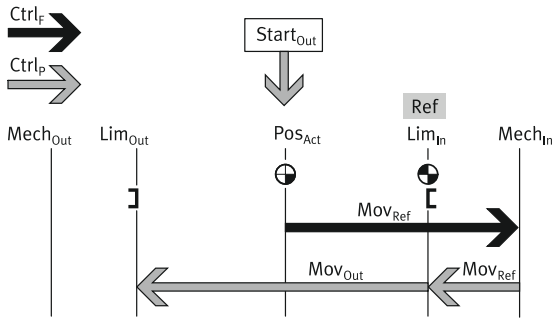

$Start_{Imp}$ positioning task to the intermediate position Pos_{Imp} (IO-Link only)

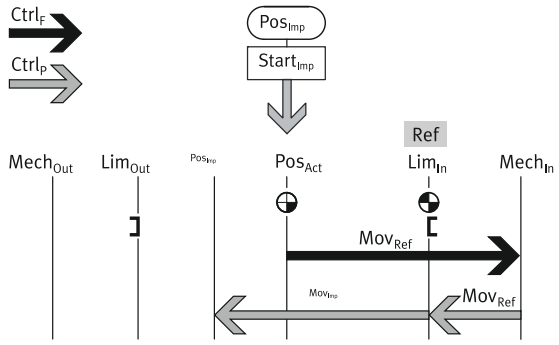

9.4 HMI display and control elements

The HMI display and control elements can be used to perform the following functions in the HMI menu:

- Unlock pushbutton actuators (Unlock HMI), press and hold for 3 s Edit — an active positioning task in DIO or IO-Link mode is stopped
  (Condition for IO-Link operation: IO-Link parameter 0x000C.4 = false)
- Select menu function with pushbutton actuators ← → (selecting menu), press Edit
- Parameterise Speed Out, Speed In and Force setpoint values
  (Set value: 10, 20, ..., 100% of the maximum value ➔ 13 Technical data) and save (Save), press Edit
- Parameterise the position of the reference end position "Ref" (Set Ref) and run the referencing movement Mov_{Ref} ($Start_{Ref}$: Pos_{Act} ➔ Lim_{In} ➔ Lim_{Out}), press Edit
- Run Start Press movement (Start/Stop) and save Start Press Position $Pos_{Start\ Press}$ (Save), press Edit
- Execute demo run (Start/Stop)
- Lock pushbutton actuators (Lock HMI), press and hold for 3 s Edit or no pushbutton actuator input for 15 s
- To acknowledge an error, press and hold Edit for 3 s
- Reset to factory settings, press ←, Edit and → simultaneously for 10 s and then carry out a Power OFF/ON on the logic power supply 24 V DC [pin 1].

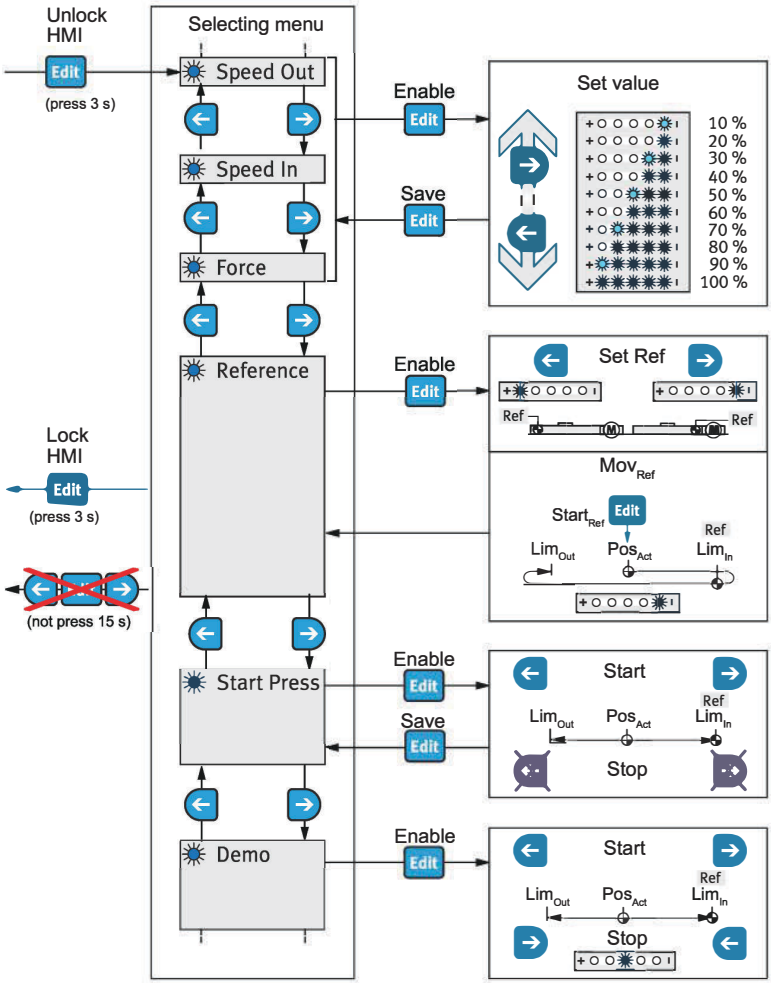

Fig. 8: HMI menu

9.5 Homing with end position determination

⚠ WARNING

Risk of injury due to unexpected movement of components.

When starting the homing run, the drive is disconnected from the power supply for a short time. This can cause unexpected movements of the connected mechanics and crush parts of the body.

- Bring moving parts of the connected mechanical system into a safe position.

ⓘ

- Referencing with end position determination is only required again if the reference end position "Ref" or the useful range needs to be changed.
- During referencing with end position determination the intermediate position Pos_{Imp} and the start press position $Pos_{Start\ Press}$ is set equal to the new end position Lim_{Out}.

During referencing with end position determination the positions of the mechanical stops $Mech_{In}$/$Mech_{Out}$ are recorded in order to calculate the end positions Lim_{In} ("Ref")/Lim_{Out} for the dimension reference system.

Before running homing with end position determination to a new reference end position "Ref", the drive is de-energised for a required re-initialisation. Then the power is restored and the process is started.

Activating homing with end position determination $Start_{Ref}$
Factory setting: motor-facing reference end position "Ref"
– HMI: activate "Reference" menu, parameterise reference end position "Ref" and initiate homing ➔ 9.4 HMI display and control elements – IO-Link, process data: parameterise reference end position "Ref" 0x0103.0, false (factory setting) or true and initiate homing 0x0104.0 = true – IO-Link, system parameters: 0x0002, value = 0xCE (Execute "Reference" Movement (False), factory setting) or value = 0xCF (Execute "Reference" Movement (True))
Sequence
The diagram shows the homing with end position determination – Mov_{Ref}: force-controlled movement $Ctrl_F$ ➔ against mechanical stop "$Mech_{In}$" – Mov_{Out}: position-controlled movement $Ctrl_P$ ➔ to the reference end position "Ref" – Mov_{Ref}: force-controlled movement $Ctrl_F$ ➔ against the mechanical stop "$Mech_{Out}$" – Mov_{Out}: position-controlled movement $Ctrl_P$ ➔ to the end position Lim_{Out}
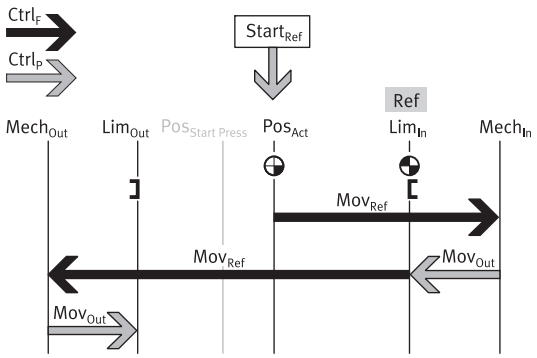

Tab. 5: Homing sequence with reference end position "Ref" initialisation and end position determination

9.6 Point-to-point operating modes

Automatic saving of device data

If automatic storage is activated (0x0109.0 = true, default), parameter changes in the device data (= data storage parameters ➔ "Integrated drive EMCS" instruction manual ➔ www.festo.com/sp) are made automatically and permanently saved in the flash memory. Exceeding the maximum permissible 100,000 write cycles results in irreparable damage to the flash memory and the device, e.g. when using the device for positioning tasks via IO-Link.

If automatic saving is deactivated (0x0109.0 = false), parameter changes are only temporarily stored in the RAM. The RAM permits an unlimited number of parameter changes, e.g. for positioning tasks via IO-Link.

For simple point-to-point operation the drive can be traversed to the "end positions "Lim_{In}/Lim_{Out} and intermediate position Pos_{Imp}" target positions (IO-Link only).

Point-to-point operation				
Parameterising point-to-point operation				
HMI: – Speed Out, Speed In, Force and Start Press ➔ 9.4 HMI display and control elements IO-Link (acyclic device data): – Speed Out speed: 0x0101.0, Speed Out[1)] – Speed In speed: 0x0100.0, Speed In[1)] – Force/torque: 0x0102.0, force[1)2)] – Start Press Position $Pos_{Start\ Press}$: 0x0105.0, Position Start Press [mm][2)3)4)] – End position Lim_{Out}: 0x0106.0, end position Out [mm][4)] – Intermediate position Pos_{Imp}: 0x0108.0, Intermediate Position [mm][3)4)]				
Controlling point-to-point operation via digital inputs				
Positioning task	Control signals			
	Mov_{In} DI1 [Logic, Pin 5]			Mov_{Out} DI2 [Logic, Pin 6]
$Start_{In}$/Mov_{In}	1			0
$Start_{Out}$/Mov_{Out}	0			1
Stop[5)]	0			0
Switch off power stage[6)]	1			1
Control point-to-point operation via IO-Link				
Positioning task	Process parameters			System parameters
	Move "In"	Move "Out"	Move "Inter-mediate"	System commands
	0x0029.1	0x0029.2	0x0029.5	0x0002
$Start_{In}$/Mov_{In}	true	false	false	= 0xC8, execute "$Move_{In}$"
$Start_{Out}$/Mov_{Out}	false	true	false	= = 0xC9, execute "$Move_{Out}$"
$Start_{Imp}$/Mov_{Imp}	false	false	true	= 0xD0, execute "$Move_{Intermediate}$"
Stop[5)]	false	false	false	= 0xCA, stop motion
Switch off power stage[6)]	≥ 2 x true			= 0xCB, disable power stage

Point-to-point operation

Sequence

The diagrams show the movements in point-to-point operation

- Mov_{Out}: position-controlled movement $Ctrl_P$ to the end position "Lim_{Out}"
- Mov_{In}: position-controlled movement $Ctrl_P$ to the end position "Lim_{In}"
- Mov_{Imp}: position-controlled movement $Ctrl_P$ to the intermediate position "Pos_{Imp}"
- Point-to-point operation with press function, from Start Press Position "$Pos_{Start\ Press}$"
  - Mov_{Out}: force-controlled movement $Ctrl_F$ until the parameterised force or torque setpoint value "Force" is reached or to the end position "Lim_{Out}"
  - Mov_{Imp}: force-controlled movement $Ctrl_F$ to the intermediate position "Pos_{Imp}" (IO-Link only)

Simple point-to-point operation

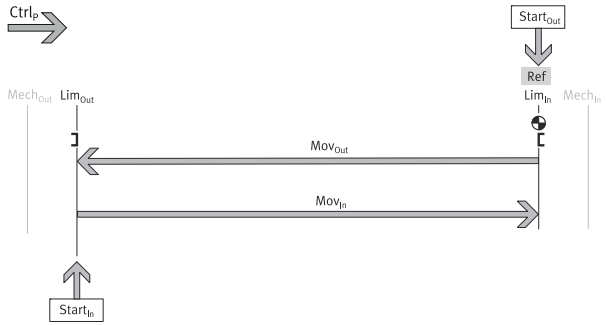

Simple point-to-point operation with intermediate position (IO-Link only)

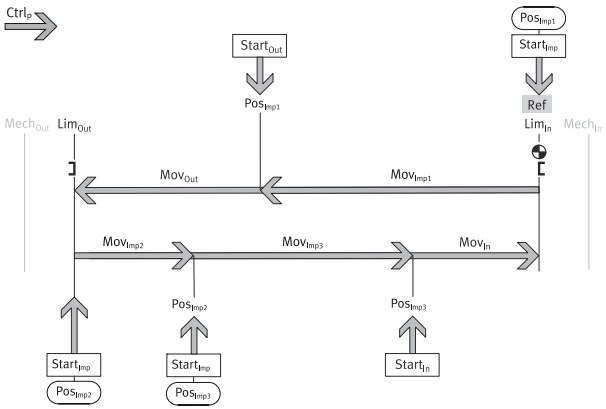

Point-to-point operation with press function

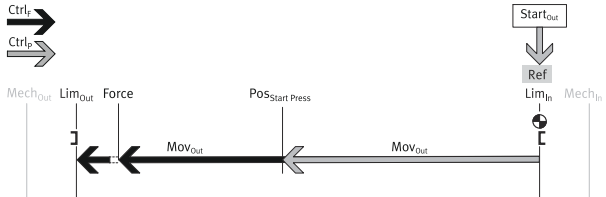

10 Malfunctions

Acknowledge error

With error acknowledgment, active error messages are deleted from the diagnostic memory if the cause of the error was remedied before acknowledgment.

Errors can be acknowledged via the following interfaces:

- Restart:
  - Logic voltage L_+, Power OFF/ON [Logic, Pin 1]
- HMI:
  - Press and hold Edit for 3 s
- DIO, digital inputs:
  - DI1 "Mov_{In}" and DI2 "Mov_{Out}" = 1 [Logic, Pin 5/6]
- IO-Link, device data:
  - 0x0107.0 Quit Error = true
- IO-Link, process data:
  - 0x0029.3 Quit Error = true
  - 0x0029.1 and 0x0029.2 = true, 0x0029.5 = any

Diagnostic messages and fault clearance

"Information, Warnings and Errors" diagnostic messages are displayed by the C/Q LED and menu and parameters LED displays.

Errors are reported to the controller as follows:

- DIO operation: output signals DO1 and DO2 = 1 [Logic, Pin 2/3]
- IO-Link operation: ProcessDataInput state "In" (0x0028.1) and state "Out" (0x0028.2) = true

---

The first error that occurred is always displayed.

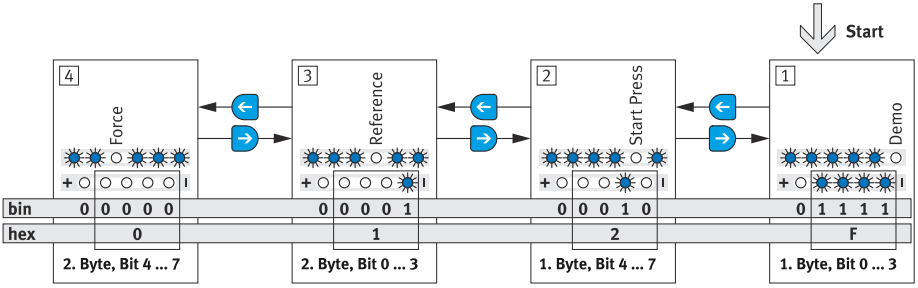

Fig. 9: Display of diagnostic messages (example)

Error code hex (dec)	Description	LED C/Q	LED indicators Menu	 Parameters	Event code (IO-Link)
Warning					
–	Warnings[1)]	yellow light	–		0x...
Error					
–	Common device error or unlisted errors Remedy – Contact Festo	red light	…		0x1000
0x000F (15)	I^2t output stage monitor error limit –		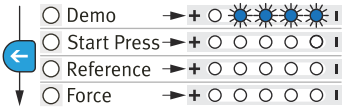		0x1805
0x0016 (22)	24 V logic supply undervoltage[2)] Remedy – Check logic voltage supply		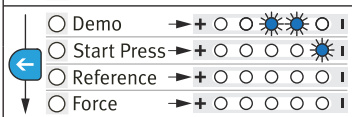		0x1804
0x0017 (23)	24 V logic supply overvoltage Remedy – Check logic voltage supply		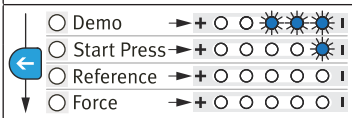		0x1803
0x001F (31)	Undervoltage in intermediate circuit Remedy – Check the load voltage supply – Check power socket for contamination		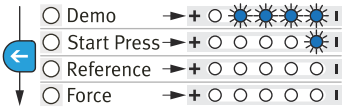		0x1806
0x0026 (38)	24 V load supply undervoltage Remedy – Check the load voltage supply – Check power socket for contamination		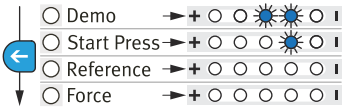		0x1802
0x0027 (39)	24 V load supply overvoltage Remedy – Check the load voltage supply		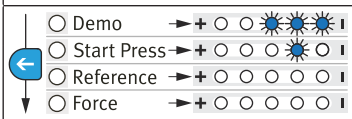		0x1801

Error code hex (dec)	Description	LED C/Q	LED indicators Menu	 Parameters	Event code (IO-Link)
0x0031 (49)	Device undertemperature Remedy – Check ambient conditions		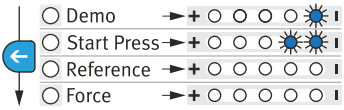		0x4000
0x0033 (51)	Device overtemperature Remedy – Check ambient conditions – Check installation conditions		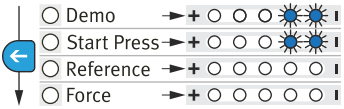		
0x012F (303)	IO-Link connection interrupted Remedy – Check power supply – Check IO-Link master – When using the IO-Link Master Beckhoff EL6224: deactivate data storage mechanism "disable"		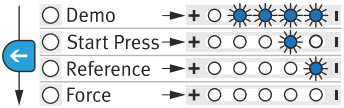		–

1) Additional information ➔ Instruction manual for integrated drive EMCS-ST
2) This error can only be acknowledged by a restart.

Tab. 7: "Information, Warnings and Errors" diagnostic messages

10.1 Repair

The product can be repaired or maintained.
- Spare parts and accessories ➔ www.festo.com/spareparts.
- Replace with an identical product ➔ www.festo.com/catalogue.

11 Replacement

Replacing drive system

1. Save the application parameters to the IO-Link master ➔ Manual integrated drive EMCS.
2. Demount the defective drive system ➔ 12 Removal.
3. Mount the new drive system ➔ 6 Mounting.
4. Connect the drive system ➔ 7 Installation.
5. Commission the drive system ➔ 8 Commissioning.
6. Update the firmware ➔ Manual integrated drive EMCS.
7. Check the current status of the application data ➔ Manual integrated drive EMCS.

Replace drive or integrated drive EMCS ➔ Manual integrated drive EMCS.

12 Removal

⚠ WARNING

Unexpected movement of components.

Injury due to impacts or crushing.

- Before working on the product, switch off the control and secure it to prevent it from being switched back on accidentally.

⚠ WARNING

Risk of Injury due to Unexpected Movement of Components

For vertical or slanted mounting position: when power is off, moving parts can travel or fall uncontrolled into the lower end position.

- Bring moving parts of the product into a safe end position or secure them against falling.

Demounting drive system

1. Allow the product to cool down to room temperature.
2. Disconnect electrical installations.
3. Remove the mounted attachment component.
4. Remove the attached accessories.
5. Remove the mounting attachments.
6. Observe transport information ➔ 5 Transport.

Demount drive or integrated drive EMCS ➔ Manual integrated drive EMCS.

13 Technical data

ELGS-TB-KF		-45	-60
Certificates, declaration of conformity for EMCS-ST		➔ www.festo.com/sp	
Mounting position		Horizontal	
Ambient temperature	[°C]	0 … +50	
Storage temperature	[°C]	–20 … +60	
Degree of protection		IP40	
Max. payload	[kg]	2.5	4
Max. speed[1)]	[m/s]	1.2[2)]	1.3[3)]
Velocity "Speed Press/ Speed Ref"[4)]	[m/s]	0.024	0.026
Max. feed force[5)6)]	[N]	75	65
Max. force on external stops during homing[7)]	[N]	84	142
Max. acceleration/decelera-tion[4)]	[m/s²]	6	
Duty cycle	[%]	100 (+30 … +50 °C: –2% per Kelvin)	
Distance between stop and end position[8)9)]	[mm]	3	2
Repetition accuracy	[mm]	±0.1	±0.1
Nominal voltage	[V DC]	24	
Logic current consumption (logic, pin 1)	[A]	DIO operation: 0.1 … 0.3 IO-Link operation: 0.1 … 0.15	
Load current consumption (power, pin 1)	[A]	5.3	5.3

ELGS-TB-KF	-45	-60
IO-Link port class	A	
IO-Link protocol version	Device V 1.1	

1) Maximum value for Speed In/Speed Out at level 10
2) Can only be achieved from a stroke of 300 mm.
3) Can only be achieved from a stroke of 500 mm.
4) Parameter that cannot be changed.
5) Maximum value for Force at level 10
6) Force is controlled and evaluated by closed-loop control of the motor current. Depending on the mechanism of the drive, a linear force can be calculated from the measured level of current. The target is set as a percentage of the rated motor current and may deviate from the actual force on the axis. At the lower force levels the frictional force of the drive system may be greater than the set feed force and may result in the drive system coming to a standstill.
7) The force acts on the stop for ≤ 100 ms
8) Distance (MechIn – LimIn or MechOut – LimOut)
9) The specified value can deviate due to the elasticity of the toothed belt.

Tab. 8: Technical data ELGS-TB

© 2024 all rights reserved to Festo SE & Co. KG

Copyright:
Festo SE & Co. KG
Ruiter Straße 82
73734 Esslingen
Germany

Phone:
+49 711 347-0

Internet:
www.festo.com