# ELGA-...-M1/-M2
## Displacement encoder

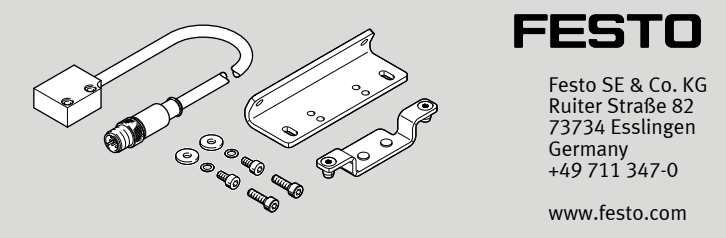

Festo SE & Co. KG
Ruiter Straße 82
73734 Esslingen
Germany
+49 711 347-0

www.festo.com

Assembly instructions

8120866
2020-03a
[8120868]

Translation of the original instructions

© 2020 all rights reserved to Festo SE & Co. KG

### 1 Applicable Documents

All available documents for the product ➔ www.festo.com/sp.

| Document | Product | Contents |
|---|---|---|
| Instructions | ELGA | Operating |

Tab. 1

### 2 Safety

### 2.1 Safety Instructions

– Only mount the product on components that are in a condition to be safely operated.
– Observe tightening torques. Unless otherwise specified, the tolerance is ± 20 %.
– Avoid external magnetic fields (> 64 mT) on the surface of the magnetic tape, otherwise the coding will be destroyed.
– Avoid external magnetic fields (> 1 mT) at the sensor, otherwise the system accuracy will be reduced.

### 2.2 Intended Use

Sensing of the slide position of an axis ELGA -...- BS / -TB-KF or ELGA -...- TB-RF.

### 3 Scope of Delivery

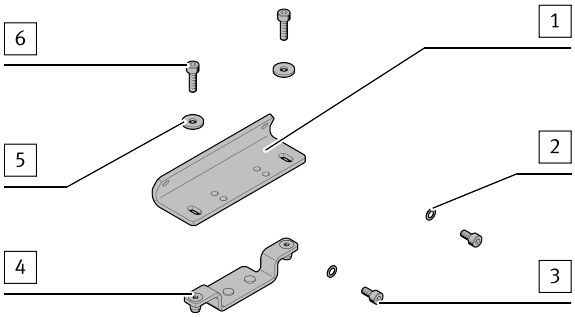


1 Sensor bracket (1x)
2 Retaining washer (2x)
3 Screw (2x)
4 Sensor mounting (1x)
5 Washer (2x)
6 Screw (2x)

Fig. 1 Sensor bracket

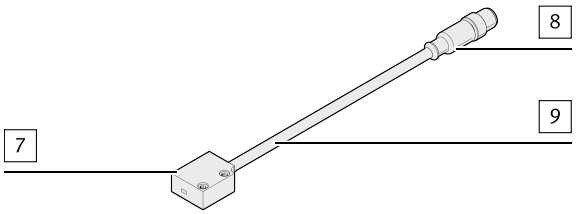


7 Sensor (1x)
8 Round plug (1x)
9 Cable (1x)

Fig. 2 Measuring unit

### 4 Assembly

### 4.1 Requirement

- Use axis with feature M1/M2.
  ↳ The magnetic tape (A) is on the axis.

### 4.2 Assembly of Displacement Encoder

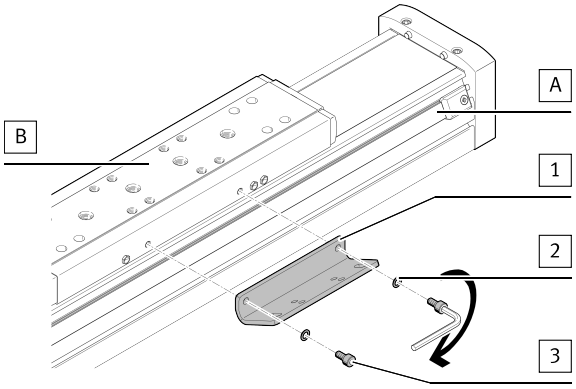


Fig. 3 Mount the sensor bracket

- Mount sensor bracket 1 with the retaining washers 2 and the screws 3 on the slide (B).

| ELGA | | 70/80 | 120/150 |
|---|---|---|---|
| 3 Screw | | M4x8 | M5x10 |
| | [Nm] | 5 | 5.9 |

Tab. 2 Tightening Torques

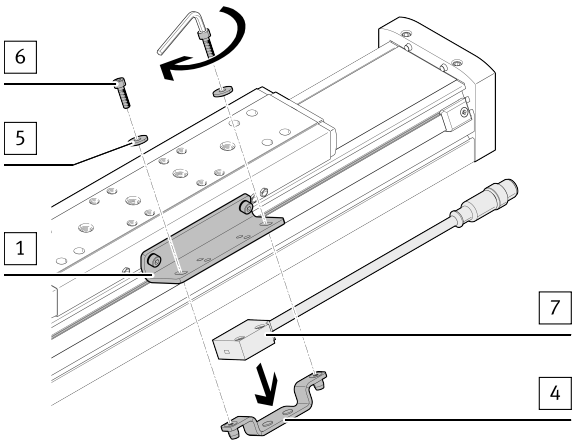


Fig. 4 Mount the measuring unit

1. Position the sensor head 7 in the sensor mounting 4.
2. Place the sensor mounting 4 and sensor head 7 on the sensor bracket 1. Sensing distance S: ➔ 7 Technical Data.
3. Mount sensor mounting 4 with the washers 5 and the screws 6. Tightening torque: 3.5 Nm

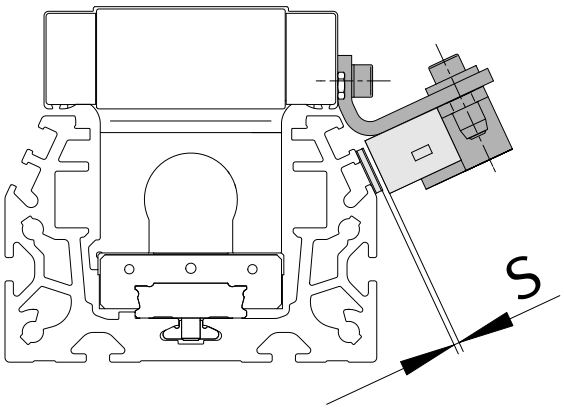


Fig. 5 Observe sensing distance

### 4.3 Strain Relief

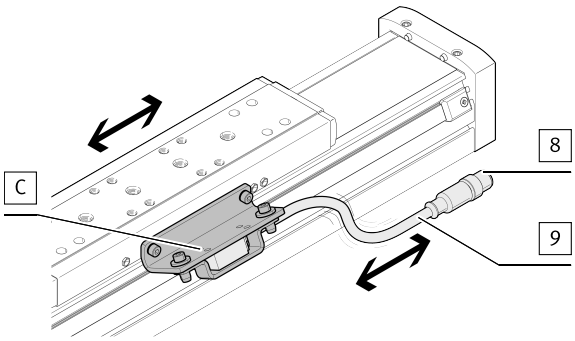


Fig. 6 Use strain relief on cable

1. Ensure sufficient strain relief for the cable 9, e.g. with cable binders. The four drill holes (C) are provided for this purpose.
2. Connect plug 8 to the matching socket. Tightening torque: 0.25 Nm ± 10%
3. Observe the permissible bending radius R and the permissible ambient temperature with flexible cable installation ➔ 7 Technical Data.

## 5 Contact Assignment

| Plug M12<br>8-pin, A-coded | Pin | Signal |
|---|---|---|
| 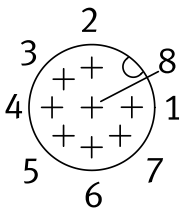 | 1 | /B |
| | 2 | /A |
| | 3 | 0 V (GND) |
| | 4 | B |
| | 5 | VCC |
| | 6 | N |
| | 7 | O |
| | 8 | /N |
| | Housing | Shield |

Tab. 3 Contact Assignment

## 6 Service

The displacement encoder and the magnetic tape (A) are maintenance-free. In the event of damage, replace the components ➔ www.festo.com/spareparts.

## 7 Technical Data

| Measuring unit | | | M1 | M2 |
|---|---|---|---|---|
| Sensing distance | S | [mm] | 0.1 … 2 | |
| Cable bending radius | R | [mm] | ≥ 60 | |
| Cable length | | [m] | ≤ 25 | |
| Permitted controllers | | | CMM… | CMM…<br>CMGA |
| Humidity | | | ≤ 80% (non-condensing) | |
| Note on materials | | | Contains paint-wetting impairment substances[1)] | |
| Measuring principle | | | Magnetic, incremental, 4x edge control | |
| Signal output | | | Proportional to speed | |
| Interpolation rate | | | 2000 | 500 |
| Resolution<br>at travel speed ≤ 4 m/s | | [µm] | 2.5 | 10 |
| Repetition accuracy | | Incre-ment | ±1 | |
| System precision at 20 °C | | [µm] | ±(25 + 20 x measuring length in m) | |
| Travel speed with CMMP-AS | | [m/s] | ≤ 4 | |
| Travel speed with CMGA | | [m/s] | ≤ 1 | ≤ 4 |
| Reference signal (N/N) | | | Cyclical, every 5 mm | |
| Weight | | [g] | 40 | |
| Acceleration | | [m/s²] | ≤ 50 | |
| Outputs | | | 5 V TTL line driver, alternating, resistant to sustained short circuit | |
| Supply voltage | | | | |
| Supply voltage DC | | [V DC] | 5 ± 2.5% | |
| Residual ripple | | [mV] | < 50 | |
| Current consumption | | [mA] | ≤ 200 | |
| Degree of protection | | | | |
| Sensor head | | | IP67 | |
| Plug | | | IP64 in mounted status | |
| Temperature | | | | |
| Storage temperature | | [°C] | –25 … +85 | |
| Ambient temperature with flexible cable installation | | [°C] | –10 … +70 | |

1) PWIS = paint-wetting impairment substances

Tab. 4 Technical Data