TECHNICAL EXCELLENCE. SINCE 1929.

INDUSTRIAL CABLE REELS

SERIES 1400

ART. 1434

Length (m)
20

Number of conductors
4 G

Cross-section (mm^2)
2.5

Wound cable capacity (@20°C)
7,0 KW @ 400V



IP65 | EN 61242 EN 60335-1 EN 61316 | CE | 2014/35/UE 2006/42/CE 2011/65/UE

TECHNICAL DATA

Article	Cable length (m)	Reel cable length (m)	Cut length (m)	Number of conductors	Cross-section (mm^2)	Wound cable capacity (@20°C)	Unwound cable capacity (@20°C)	Cable diameter (mm)	Thermal switch	Cable type
1434	20	18	2	4 G	2.5	7,0 KW @ 400V	10 KW @ 400V	11	NO	PVC

Please note: The images are for illustrative and explanatory purposes only

OVERALL DIMENSIONS

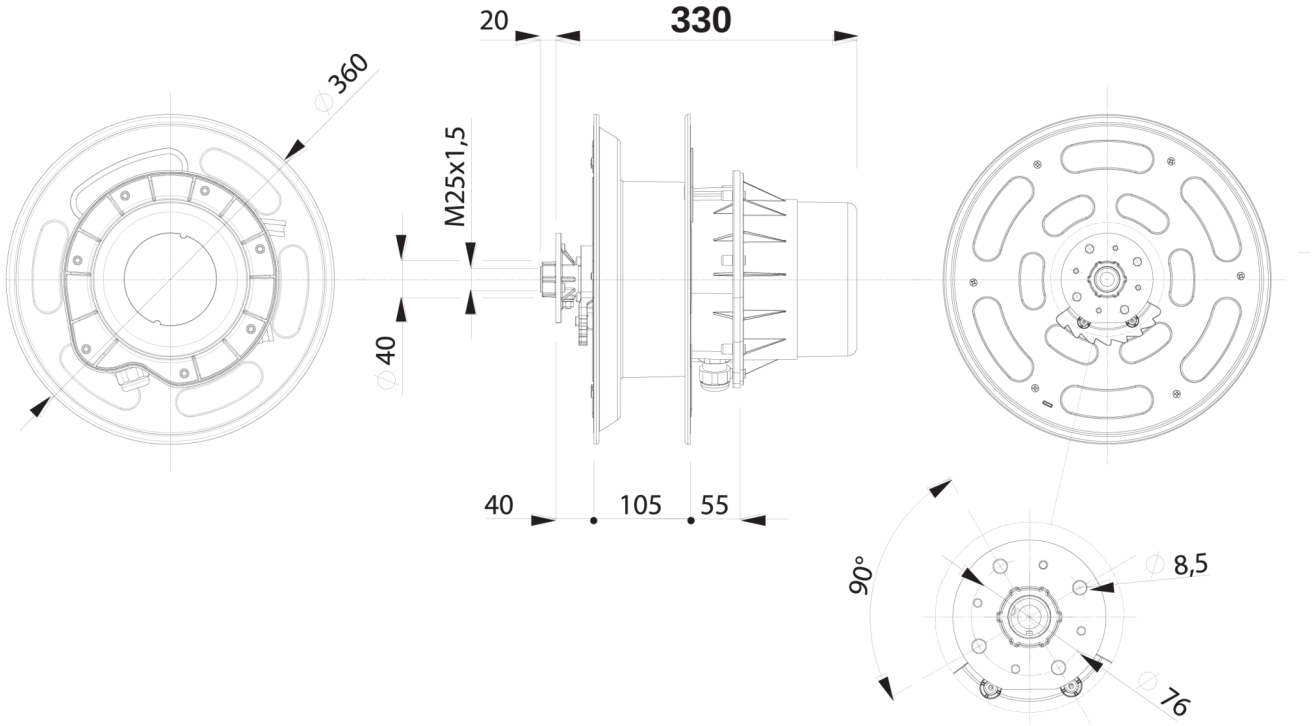

Technical features

- Steel structure with epoxy and technopolymer painting.
- Side fixing flange in aluminum.
- Collectors with 20 - 50 - 100A capacity.
- Long lasting steel spring.
- Degree of protection IP65.
- Supplied without cable or with cable H05 VV-F and H07 RN-F.
- Suitable for rewinding cables from 1 to 12 conductors.
- Ambient temperature of use: -5 ° C / + 50 ° C.
- Maximum rewind speed 30 m / min.
- Collector insulation voltage 2.5 KV.

Cable reel supplied without bracket, without cable guide entry and without detent. These accessories can be purchased separately.

OPTIONAL ACCESSORIES AND SPARE PARTS

ART. 1405
Swivel bracket

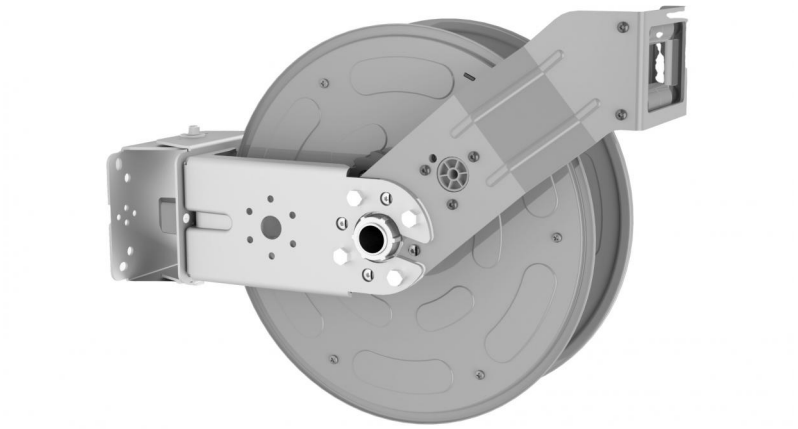

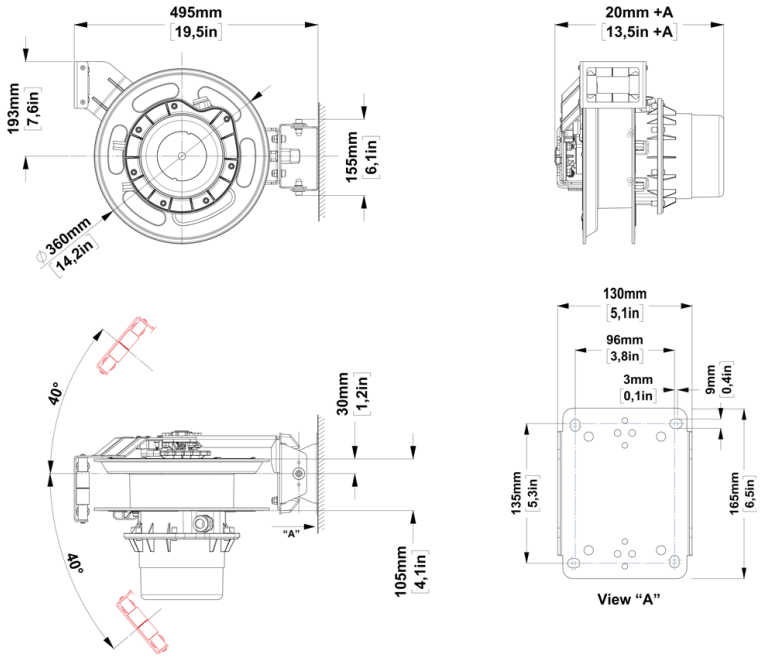

Please note: The images are for illustrative and explanatory purposes only

OPTIONAL ACCESSORIES AND SPARE PARTS

ART. 1403

Fixed bracket

For wall, floor or ceiling fixing.



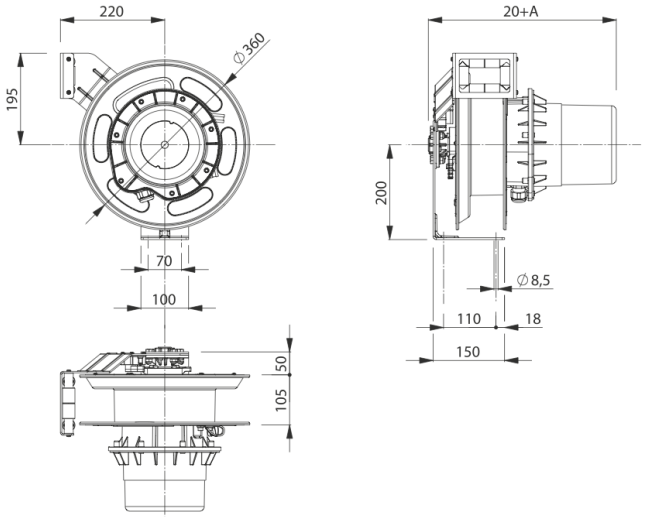

OPTIONAL ACCESSORIES AND SPARE PARTS

ART. 1406

Arm with cable guide mouth

- Complete with stop tooth.



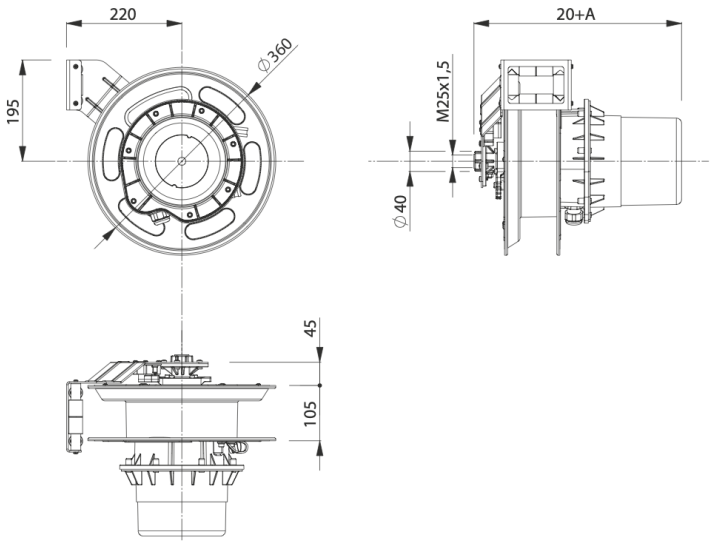

Please note: The images are for illustrative and explanatory purposes only