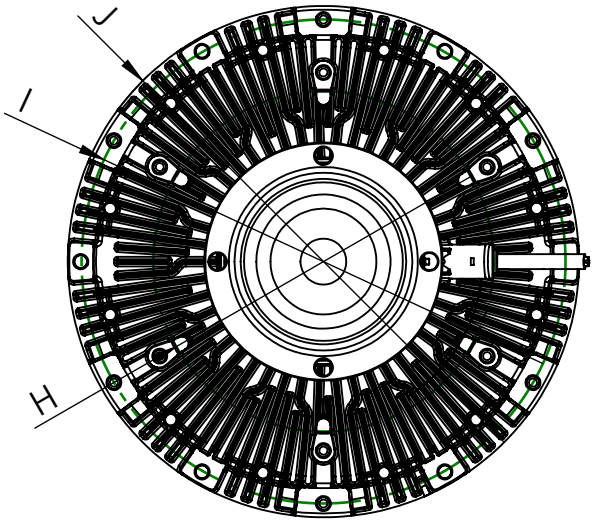

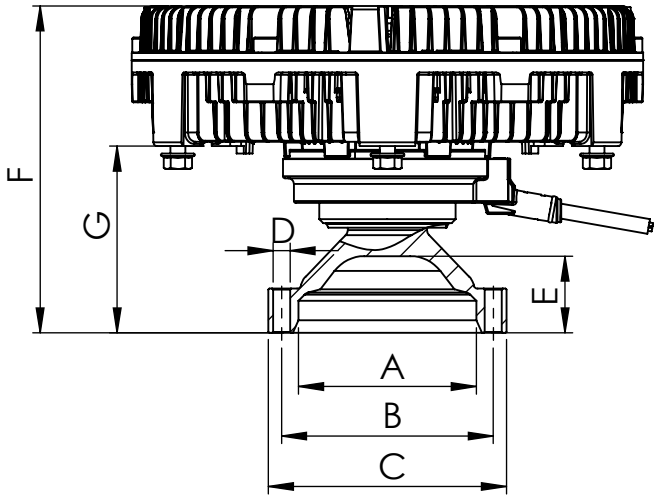

Rotation: Clockwise

Dimensional values

INPUT SHAFT				FAN CLUTCH			
Ref. nº	**Value**	**Ref. nº**	**Value**	**Ref. nº**	**Value**	**Ref. nº**	**Value**
A	∅94 H8 mm			F	173 ±1 mm		
B	∅112 mm			G	98.8 ±0,5 mm		
C	∅126 mm			H	∅180 0 -0,3 mm		
D	4x ∅9 mm			I	∅256 ±0,5 mm		
E	40.6 ±2 mm			J	∅270.4 mm		

Modification						
nº	**Modified**	**Date**	**Reason**	**General Tolerance**	**Assembly**	Technical sheet
4					**Drawn**	cojali
3					15/01/24 E.H.	
2					**Checked**	
1					15/01/24 R.U.	
Comments				ISO 2768 c-K	**Part name**	T25
				Material	**ID. Reference**	7083408
					Scale: 1/4	**Sheet 1/1**
					Review: 0	