Ultrasonic Sensors - US18

DATALOGIC

SENSORS

Ultrasonic sensors for high precision detection of clear and transparent objects

- Clear object detection, inspection on transparent or highly reflective film and liquid level measurement
- Standard M18 tubular and M18 right angle mounting
- 50...500 mm Background and Foreground Suppression
- Teach-in push button or remote input for distance range setting
- Auto-Window function
- Standard M12 4-pole connector and M12 5-pole connector
- PNP or NPN outputs for object detection and 0-10 V or 4-20 mA analog outputs for distance measure
- IP67, NEMA 6P-rated

APPLICATIONS

- Packaging machines
- Beverage & Bottling
- Automotive assembling line

US18		
Tubular		30...300 mm Analog model resolution: 0,5 mm (SLOW mode), 1 mm (FAST mode)
Right angle		50...500 mm Repeatibility: 0,7 mm
Power supply	Vdc	10...30 V (US18 tubular), 12...30 V (US18 right angle)
	Vac	
	Vac/dc	
Output	PNP	▪
	NPN	▪
	NPN/PNP	▪
	relay	
	other	0...10 V, 4...20 mA Analog (US18 tubular)
Connection	cable	
	connector	▪
	pig-tail	
Housing material		Plastic
Mechanical protection		IP67, NEMA 6-P

TECHNICAL DATA

	US18-PA/PR-5-N03	US18-PL-5-N03
Operating distance	30...300 mm	50...500 mm
Housing Type	M18 tubular	M18 Right Angle
Power supply	10...30 Vdc	12...30 Vdc
Ripple	10% max.	
Current consumption	65 mA max.	25 mA max.
Output current	100 mA max.	
Output saturation voltage	1,6 V max.	3 V max.
Output	PNP and NPN 0...10 V or 4...20 mA analog output	PNP or NPN
Delay at powering	300 ms	
Response time	8 ms (NPN/PNP) 2,5 ms (Analog out. FAST mode) 30 ms (Analog out. SLOW mode)	15 ms
Switching frequency	62,5 Hz (NPN/PNP) 200 Hz (Analog out. FAST mode) 16 Hz (Analog out. SLOW mode)	32 Hz
Repeatability	0,5 mm	0,7 mm
Indicators	yellow/green OUTPUT LED red POWER LED	red/green RANGE LED yellow/red OUTPUT LED
Setting	Teach-in push-button or remote input	
Ultrasonic emission frequency	300 kHz	
Minimum detection window	5 mm	
Operating temperature	-25...+55 °C	-20...+60 °C
Vibration	0.5 mm amplitude, 10 ... 55 Hz frequency, for every axis (EN60068-2-6)	
Shock resistance	11 ms (30 G) 6 shock for every axis (EN60068-2-27)	
Housing material	thermoplastic polyester	ABS
Protection class	IP67, NEMA 6-P rated	
Connections	M12 5-pole connector	M12 4-pole connector

DIMENSIONS

M18 Tubular

AXIAL VERSION - US18 PA-5-N03-XX

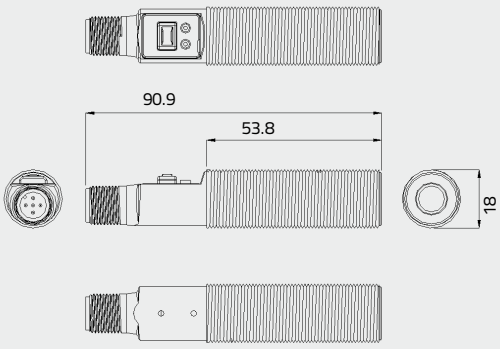

RADIAL VERSION - US18 PR-5-N03-XX

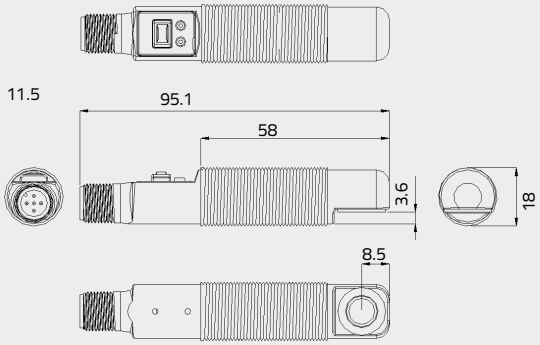

M18 Right Angle

US18 PL-5-N03-NH/PH

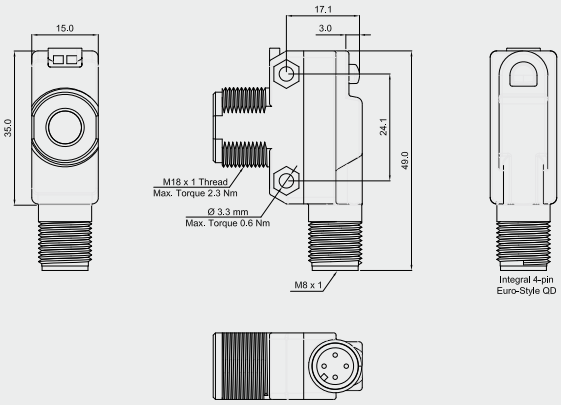

mm

Ultrasonic Sensors - US18

DATALOGIC

MAIN FEATURES

The US18 ultrasonic sensors detection is indipendent from the target color, reflectivity and transparency, making them suitable for critical material applications.

The US18 series is designed to withstand hostile enviroments. IP67 and NEMA 6-P rated guarantee protection against water, dust, oil or coolant, enabling either indoor or outdoor use.

PRINCIPLES OF OPERATION

Ultrasonic sensors emit one or multiple pulses of high frequency energy which travel through the air at the speed of sound. The sensor detects an object when a portion of this energy is reflected by the target and travels back to the sensor.

The sensor measures the total time required for the energy to reach the target and return to the sensor and the distance to the object is then calculated using the following formula

$$D = vt/2$$

D = distance from the sensor to the target

v = speed of sound in air

t = transit time for the ultrasonic pulse

TEMPERATURE COMPENSATION

The speed of sound is dependent upon the composition, pressure and temperature of the gas in which it is travelling. For most ultrasonic applications, the composition and pressure of the gas are relatively fixed, while the temperature may fluctuate.

Changes in air temperature affect the speed of sound, which in turn affects the distance reading measured by the sensor. An increase in air temperature shifts both sensing window limits closer to the sensor. Conversely, a decrease in air temperature shifts both limits farther away from the sensor. This shift is approximately 3,5% of the limit distance for a 20°C change in temperature.

The US18 ultrasonic sensors are temperature compensated. This reduces the error due to temperature by about 90%. The sensor will maintain its window limits to within 1,8% over the -20° to +60°C range.

CONNECTIONS

M12 CONNECTOR

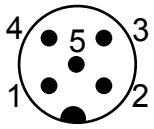

PIN	WIRE	TUBULAR DIGITAL VERSION US18 PA/PR...OH	TUBULAR ANALOG VERSION US18 PA/PR...IH/VH	RIGHT ANGLE US18 PL...NH/PH
1	Brown	10...30 Vdc	10...30 Vdc	12...30 Vdc
2	White	NPN OUTPUT	4...20 mA or 0...10 V	REMOTE TEACH (0...2 Vdc)
3	Blue	0 V	0 V	0 V
4	Black	PNP OUTPUT	5...30 Vdc (FAST mode) or 0...2 Vdc (SLOW mode)	OUTPUT (PNP or NPN)
5	Grey	REMOTE TEACH (0...2 Vdc)	REMOTE TEACH (0...2 Vdc)	-

Ultrasonic Sensors - US18

DATALOGIC

TUBULAR

The **US18-PA/PR-5-N03 tubular** version sensors are excellent foreground and/or background suppressors and guarantee a small blind zone providing a wide operating range from 30 to 300 mm.

The standard M18 tubular shape and the two different directions of acoustic emission, axial and radial, offer comprhensive solutions of installation. Connecting properly the output pins is possible to set the sensor in FAST mode (down to 2,5 ms of response time) or in SLOW mode (30 ms). Speeding the output response means reduce the resolution. Slowest applications will allow to detect smaller objects.

The series offers models either with discrete or with analog output.

The Teach-in procedure is simple and allows to set the minimum and maximum values or to fix a switching window with 10 mm width in the models with discrete output (Auto-Window function).

The models with analog output are conceived as distance sensors and the output signal can be scaled on windows of any width inside the operating range or positioned at the centre of a detection window with a fixed width of 100 mm (Auto-window function).

DETECTION DIAGRAM

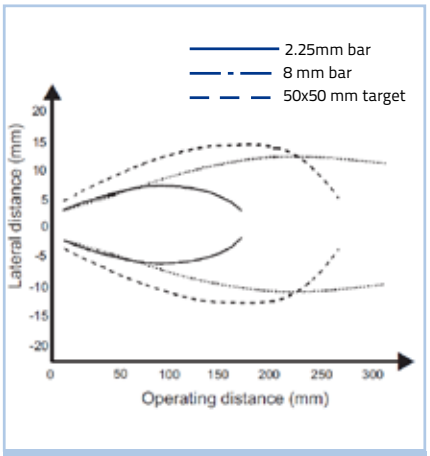

Beam - distance variation (typical values)

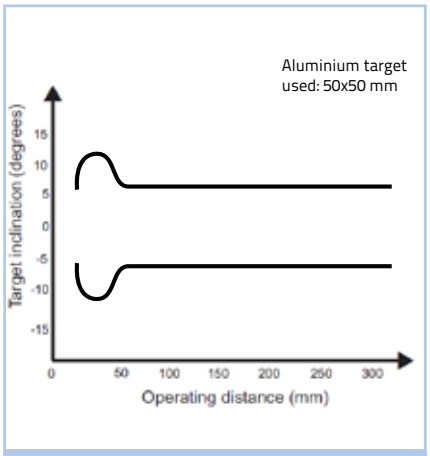

Maximum target inclination (models with discrete output)

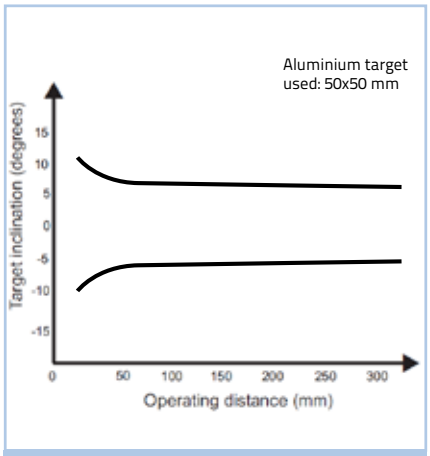

Maximum target inclination (models with analog output)

Ultrasonic Sensors - US18

RIGHT ANGLE

The **US18-PL-5-N03 right angle** sensor is able to detect directly the objects, without any separeted receiver unit, performing the foreground and the background suppression with an extremely reduced blind zone and operating distances from 50 to 500 mm.

This model provides discrete outputs (PNP or NPN) through a M12 4-pole standard connector, active when the maximum and minimum detection thresholds are exceeded, making this sensor very suitable for objects detection in limited space and very subject to light reflections.

DETECTION DIAGRAM

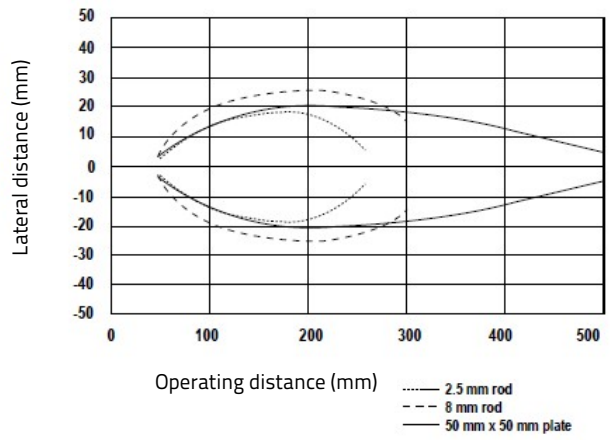

Beam - distance variation
(typical values)

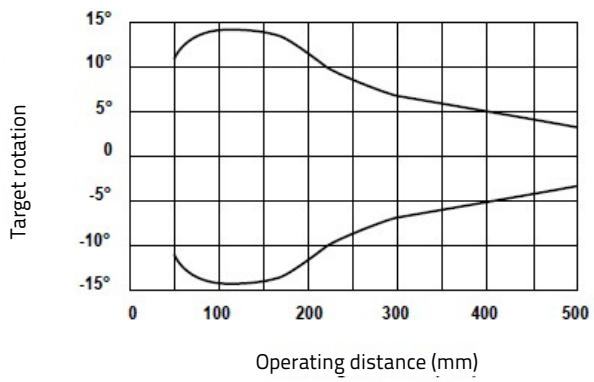

Maximum target inclination

Normally Open operation

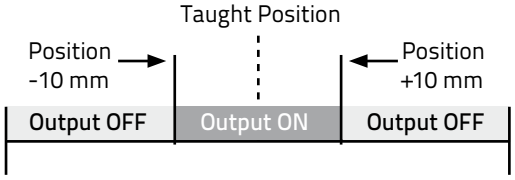

Normally closed operation

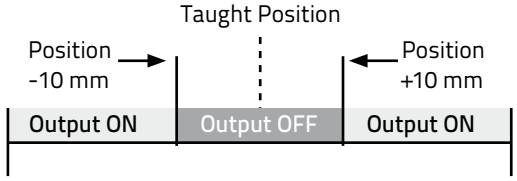

The sensors are easily configured through the Teach-in function, fixing the minimum and maximum limits in which the target has to be detected or centering a 20 mm window on the taught position when the Auto-Window feature is used.

SETTING

Two TEACH methods may be used to program the sensor:
- teaching individual minimum and maximum limits
- using Auto-Window feature to center a sensing window around the taught position

The sensor may be programmed either via its push button, or via a remote switch.

Remote programming also may be used to disable the push button, preventing unauthorized personnel from adjusting the programming settings.

The operating status is reported by two color LEDs:

red POWER LED when the target is weak or outside sensing range, green POWER LED when the target is good and the sensor is operating normally

yellow OUTPUT LED when the target is within the window limits, red OUTPUT LED when the sensor is in TEACH mode

TEACH interface

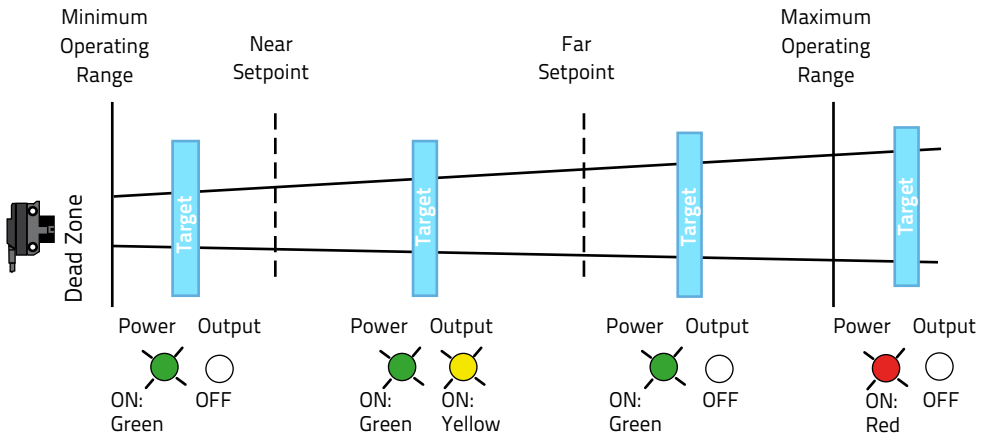

Current-sourcing models

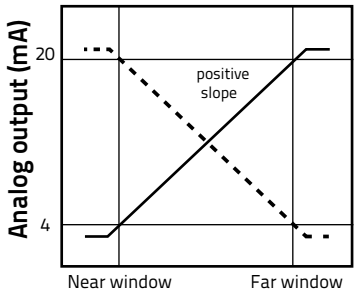

Voltage-sourcing models

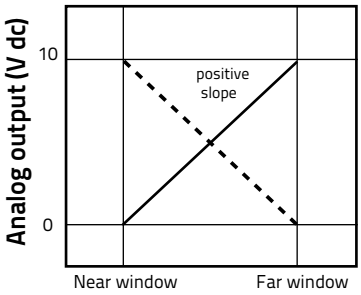

M18 TUBULAR - ANALOG VERSION

The sensor may be programmed for either a positive or a negative output slope, based on which limit is taught first:
- if the Near limit is taught first, the slope will be positive
- if the Far limit is taught first, the slope will be negative

The analog output signal, is automatically distributed over the width of programmed sensing window (linearity: ±1 mm in FAST mode, ±0,5 mm in SLOW mode).

MODEL SELECTION AND ORDER INFORMATION

FUNCTION	HOUSING TYPE	OPERATING DISTANCE	OUTPUT	MODEL	ORDER No.
Foreground and Background suppression	M18 Tubular, axial	30...300 mm	NPN and PNP	US18-PA-5-N03-OH	95B040000
	M18 Tubular, radial		NPN and PNP	US18-PR-5-N03-OH	95B040010
	M18 Tubular, axial		4-20 mA Analog	US18-PA-5-N03-IH	95B040020
	M18 Tubular, radial		4-20 mA Analog	US18-PR-5-N03-IH	95B040030
	M18 Tubular, axial		0-10 V Analog	US18-PA-5-N03-VH	95B040040
	M18 Tubular, radial		0-10 V Analog	US18-PR-5-N03-VH	95B040050
	M18 Right angle mounting	50...500 mm	NPN	US18-PL-5-N03-NH	95B040140
			PNP	US18-PL-5-N03-PH	95B040150

ACCESSORIES

SP-40

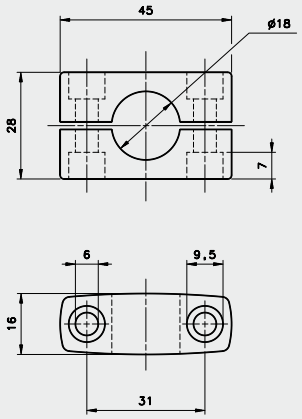

ST-5011

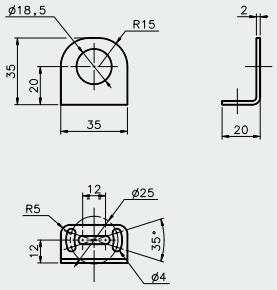

ST-5012

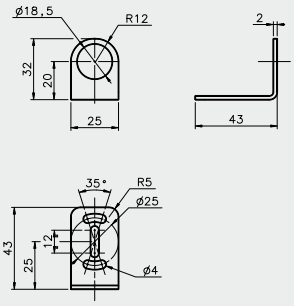

ST-5017

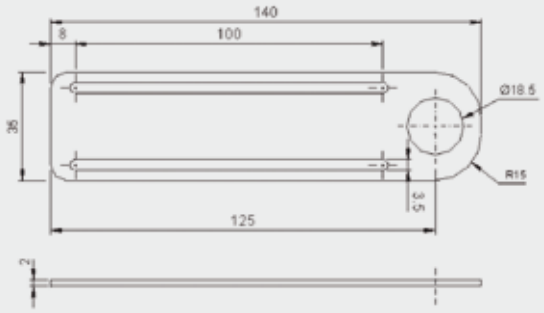

SWING-18

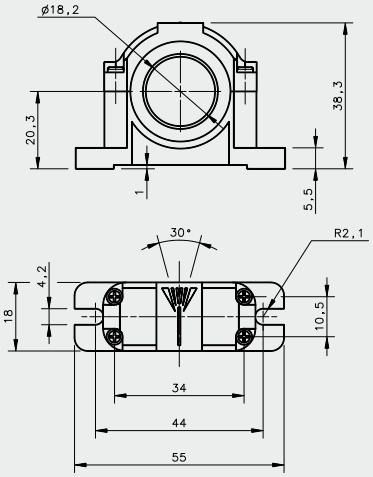

PLASTIC NUT

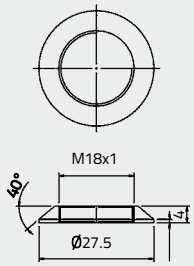

mm

ACCESSORIES SELECTION AND ORDER INFORMATION

DESCRIPTION	MODEL	ORDER No.
ST-5011	M18 mounting bracket short	95ACC5240
ST-5012	M18 mounting bracket long	95ACC5250
ST-5017	M18 mounting bracket standard profile	95ACC5270
SP-40	Mounting support for tubular M18 sensors	95ACC1370
Plastic Nut	Flared mounting nut	95ACC2630
SWING-18	Adjustable support for plastic tubolar M18 sensors	895000006

CABLES

CONNECTOR	DESCRIPTION	LENGTH	MODEL	ORDER No.
Axial M12 connector	4-pole, Grey, P.V.C.	3 m	CS-A1-02-G-03	95ACC1380
		5 m	CS-A1-02-G-05	95ACC1270
		7 m	CS-A1-02-G-07	95ACC1280
		10 m	CS-A1-02-G-10	95ACC1390
Radial M12 connector		3 m	CS-A2-02-G-03	95ACC1360
		5 m	CS-A2-02-G-05	95ACC1240
		7 m	CS-A2-02-G-07	95ACC1245
		10 m	CS-A2-02-G-10	95ACC1260
Axial M12 connector	5-pole, Grey, P.V.C.	3 m	CS-A1-03-G-03	95ACC2110
		5 m	CS-A1-03-G-05	95ACC2120
		10 m	CS-A1-03-G-10	95ACC2140

L'azienda si impegna per il continuo miglioramento e rinnovamento dei prodotti, per questo motivo i dati tecnici e il contenuto di questo catalogo possono subire variazioni senza preavviso. Per la corretta installazione e l'uso, l'azienda può garantire solo i dati indicati nel manuale di istruzioni fornito con il prodotto.