Data Sheet | Item Number: 857-560

Voltage signal conditioner; Voltage input signal; Current and voltage output signal; Digital output; Configuration via software; Supply voltage: 24 VDC; 6 mm module width

https://www.wago.com/857-560

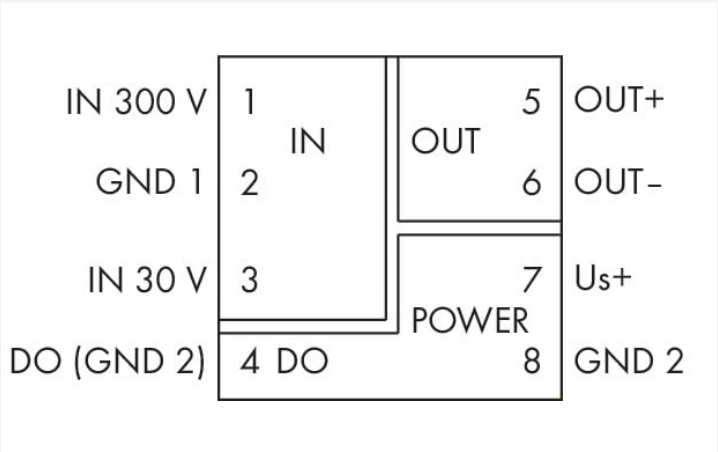

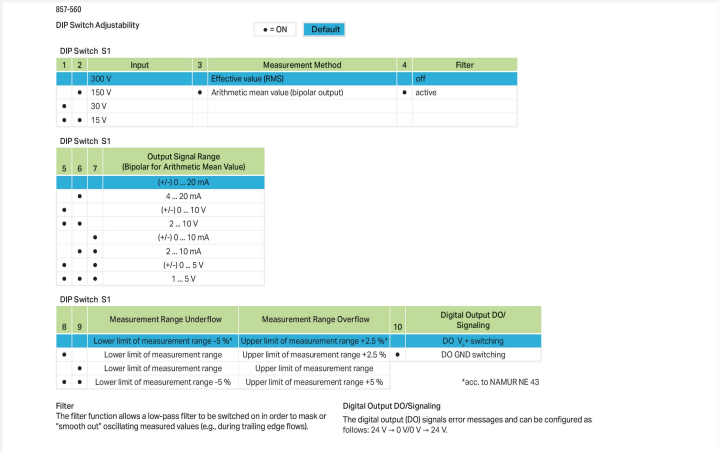

857-560

DIP Switch Adjustability

• = ON | Default

DIP Switch S1

1	2	Input	3	Measurement Method	4	Filter
		300 V		Effective value (RMS)		off
	•	150 V	•	Arithmetic mean value (bipolar output)	•	active
•		30 V				
•	•	15 V				

DIP Switch S1

5	6	7	Output Signal Range (Bipolar for Arithmetic Mean Value)
			(+/-) 0 ... 20 mA
	•		4 ... 20 mA
•			(+/-) 0 ... 10 V
•	•		2 ... 10 V
		•	(+/-) 0 ... 10 mA
	•	•	2 ... 10 mA
•		•	(+/-) 0 ... 5 V
•	•	•	1 ... 5 V

DIP Switch S1

8	9	Measurement Range Underflow	Measurement Range Overflow	10	Digital Output DO/ Signaling
		Lower limit of measurement range -5 %*	Upper limit of measurement range +2.5 %*		DO V+ switching
•		Lower limit of measurement range	Upper limit of measurement range +2.5 %	•	DO GND switching
	•	Lower limit of measurement range	Upper limit of measurement range		
•	•	Lower limit of measurement range -5 %	Upper limit of measurement range +5 %		

*acc. to NAMUR NE 43

Filter
The filter function allows a low-pass filter to be switched on in order to mask or "smooth out" oscillating measured values (e.g., during trailing edge flows).

Digital Output DO/Signaling
The digital output (DO) signals error messages and can be configured as follows: 24 V → 0 V/0 V → 24 V.

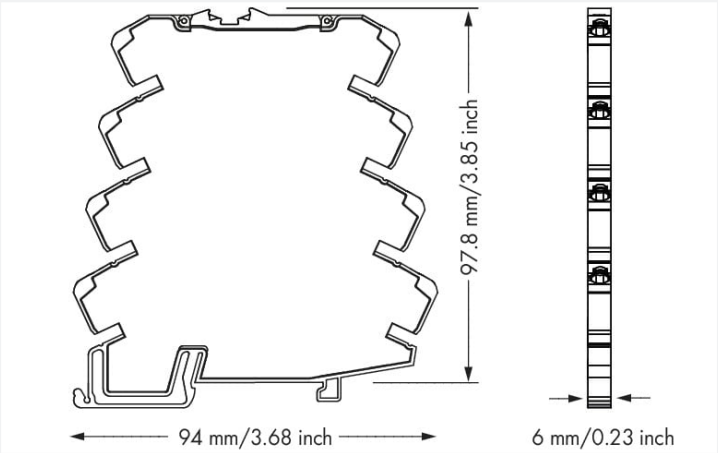

Dimensions in mm

Short description:
WAGO's voltage signal conditioner measures AC/DC voltages up to 300 V, converting the input signal into a standard analog signal at the output.
Features:

- Two isolated measurement inputs for 30 and 300 V AC/DC
- RMS measurement or arithmetic mean value
- A digital signal output reacts to configured measurement range limits (on/off switching delay and threshold value switch function can be configured with up to two threshold values).
- Switchable filter function
- 3-way electrical isolation with 2.5 kV test voltage

Technical data

Configuration

Configuration options	DIP switch WAGO Interface Configuration Software WAGO Interface Configuration App

Input

Input signal type	Voltage
Input signal (voltage)	AC/DC 300 V (IN 1); AC/DC 30 V (IN 2)
Measurement frequency	10 … 100 Hz (AC)
Frequency range	10 … 100 Hz (AC)
Input resistance (voltage input)	≥ 300 kΩ
Response threshold	300 mV (IN 1); 30 mV (IN 2)
Resolution (voltage)	30 mV (IN 1) 3 mV (IN 2)

Output (analog)

Output signal type	Current Voltage
Output signal (voltage)	0 … 5 V; 1 … 5 V; 0 … 10 V; 2 … 10 V (can be inverted, also bipolar)
Output signal (current)	0 … 10 mA; 2 … 10 mA; 0 … 20 mA; 4 … 20 mA (can be inverted, also bipolar)
Load impedance (voltage output)	≥ 1 kΩ
Load impedance (current output)	≤ 600 Ω

Output (digital)

Switching voltage (DO) max.	Supply voltage applied
Continuous current (DO) max.	100 mA (no internal restriction)
Number of switching thresholds (DO)	1 or 2 (adjustable)
Configurable rise/fall delay time (DO)	0 … 60 s (via software)

Signal processing

Measurement method	RMS measurement; Arithmetic mean value
Limit frequency	2 kHz
Software filter (adjustable)	Moving average value (filter level: 30)
Step response (typ.)	30 ms

Measurement error

Transmission error (max.)	≤ 0.5 % (of the full scale value)
Temperature coefficient	≤ 0.01 %/K

Power supply

Power supply type	24 VDC
Nominal supply voltage U_S	DC 24 V
Supply voltage range	±30 %
Current consumption at nominal supply voltage	≤ 46 mA (+ I_{DO})

Safety and protection

Rated voltage	300 V; 150 V (UL)
Measurement category per EN/UL 61010-2-030	CAT II (input)
Note on insulation parameters	The digital output (DO) is at the potential of the supply.
Protection type	IP20

Test voltage

Test voltage (input/analog output/supply/service interface)	2.5 kVAC; 50 … 60 Hz; 1 min

Insulation coordination (UL)

Overvoltage category	II
Pollution degree	2
Insulation type (input/analog output/supply/service interface)	Reinforced insulation (safe isolation)

Insulation coordination

Overvoltage category	II
Pollution degree	2
Insulation type (input/analog output/supply/service interface)	Double insulation (impedance and basic insulation) Requirement: The GND 1 input is dangerous when active and the measurement is conducted as a low-side measurement!

Connection data

Connection technology	Push-in CAGE CLAMP®
Solid conductor	0.08 … 2.5 mm² / 28 … 14 AWG
Fine-stranded conductor	0.34 … 2.5 mm² / 22 … 14 AWG
Strip length	9 … 10 mm / 0.35 … 0.39 inches

 Continued on next page

Physical data

Width	6 mm / 0.236 inches
Height	94 mm / 3.701 inches
Depth from upper-edge of DIN-rail	97.8 mm / 3.85 inches

Mechanical data

Mounting type	DIN-35 rail

Material data

Fire load	0.013 MJ
Weight	40 g

Environmental requirements

Ambient temperature (operation)	-40 … +70 °C (at nominal current)
Ambient temperature (storage)	-40 … +85 °C
Temperature range of connection cable	≥ ($T_{ambient}$ + 10 K)
Temperature range of connection cable (UL)	80 °C
Relative humidity	5 … 95 % (no condensation permissible)
Operating altitude (max.)	2000 m

Standards and specifications

Conformity marking	CE
EMC immunity to interference	EN 61000-6-2; EN 61326-2-3; EN 50121-3-2
EMC emission of interference	EN 61000-6-3; EN 61326-2-3; EN 50121-3-2
Standards/specifications	EN 61010-1 EN 61373 EN 50121-3-2

Commercial data

eCl@ss 10.0	27-21-01-25
eCl@ss 9.0	27-21-01-25
ETIM 8.0	EC002477
ETIM 7.0	EC002477
PU (SPU)	1 pcs
Packaging type	Bag
Country of origin	DE
GTIN	4055143481571
Customs tariff number	85437090300

Environmental Product Compliance

CAS-No.	11120-22-2 1303-86-2 1317-36-8 7439-92-1 75980-60-8
REACH Candidate List Substance	Diboron trioxide Lead Lead monoxide Lead silicate Phosphine oxide, diphenyl(2,4,6-trimethylbenzoyl)-
RoHS Compliance Status	Compliant,With Exemption
RoHS Exemption	6(c) 7(a) 7(c)-I 7(c)-II
SCIP notification number (Austria)	e39ffb15-f554-4816-a577-82f294898011

 Continued on next page

Environmental Product Compliance

SCIP notification number (Belgium)	4e3c29de-9839-4487-8450-21e290cce428
SCIP notification number (Bulgaria)	a62309da-6e93-49d0-9ca6-31ee2cbbee05
SCIP notification number (Czech Republic)	4e179792-6d82-43e7-a0bc-61c1bbf5190b
SCIP notification number (Denmark)	d9e51cec-dd28-4094-8511-04bde8b72d54
SCIP notification number (Finland)	bfe296bd-7c71-4597-9172-90001c8c8f8c
SCIP notification number (France)	396a94fe-cc62-47b3-ae66-2fa168881435
SCIP notification number (Germany)	fbcf3bd8-1c98-48b5-a7db-5e8e81acb7f1
SCIP notification number (Hungary)	2b23d5cf-8881-40dc-b708-8ad82f781d25
SCIP notification number (Italy)	a6a805df-791f-45bb-b670-7af08d995145
SCIP notification number (Netherlands)	9cd592c7-c51d-4742-a863-2d13dd0e889c
SCIP notification number (Poland)	2b299cf8-7127-49b5-ba48-13995ec4bfb6
SCIP notification number (Romania)	d8ac266d-97e5-40de-a3e4-c13eda02beb5
SCIP notification number (Sweden)	02e70fdd-434e-4d94-91a6-1e9375b034c3

Approvals / Certificates

General approvals

Approval	Standard	Certificate Name
EAC Brjansker Zertifizierungs-stelle	TP TC 020/2011	EAC_Certificate_RU_C-DE.AM02.B.00115_19
EAC Brjansker Zertifizierungs-stelle	TP TC 004/2011	EAC RU C-DE.AM02.B.00122/19
UL Underwriters Laboratories Inc. (ORDINARY LOCATI-ONS)	UL 61010-2-201	E175199

Declarations of conformity and manufacturer's declarations

Approval	Standard	Certificate Name
EU-Declaration of Confor-mity WAGO GmbH & Co. KG	-	-

Downloads

Environmental Product Compliance

Compliance Search

Environmental Product Compliance 857-560

Documentation

Manual

WAGO Current and Vol-tage Signal Conditio-ners and Power Measu-rement Modules

Bid Text

857-560	17.07.2019	xml 7.35 KB	
857-560	17.07.2019	docx 19.16 KB	
857-560	17.07.2019	pdf 77.36 KB	

 Continued on next page

Instruction Leaflet			
Signal conditioner; voltage; configurable; with digital output	V 2.0.0 29.09.2020	pdf 2397.31 KB	

CAD/CAE-Data

CAD data
2D/3D Models 857-560

CAE data
EPLAN Data Portal 857-560
WSCAD Universe 857-560
ZUKEN Portal 857-560

Engineering-Software

Configuration and Commissioning Software			
WAGO Interface Configuration Software G2 FULL	1.00.10.01 20.01.2022	exe 112213.07 KB	
WAGO Interface Configuration Software G2 SMALL	1.00.10.01 20.01.2022	exe 30238.22 KB	

1 Compatible Products

1.1 Optional Accessories

1.1.1 Cables and connectors

1.1.1.1 Communication cable

Item No.: 750-923/000-001
Configuration cable; USB connector; Length: 5 m

1.1.2 Communication

1.1.2.1 Bluetooth

Item No.: 750-921
Bluetooth® Adapter

 Continued on next page

1.1.2.2 Communication cable

Item No.: 750-923
Configuration cable; USB connector; Length: 2.5 m

1.1.3 Interface module

1.1.3.1 Interface adapters

Item No.: 857-980
Interface adapter; 16-pole; analog

1.1.4 Jumper

1.1.4.1 Jumper

Item No.: 281-482
Jumper; 2-way; insulated; gray

Item No.: 859-410/000-006
Jumper; for jumper slot; 10-way; insulated; blue

Item No.: 859-410
Jumper; for jumper slot; 10-way; insulated; light gray

Item No.: 859-410/000-005
Jumper; for jumper slot; 10-way; insulated; red

Item No.: 859-410/000-029
Jumper; for jumper slot; 10-way; insulated; yellow

Item No.: 859-402/000-006
Jumper; for jumper slot; 2-way; insulated; blue

Item No.: 859-402
Jumper; for jumper slot; 2-way; insulated; light gray

Item No.: 859-402/000-005
Jumper; for jumper slot; 2-way; insulated; red

Item No.: 859-402/000-029
Jumper; for jumper slot; 2-way; insulated; yellow

Item No.: 859-403/000-006
Jumper; for jumper slot; 3-way; insulated; blue

Item No.: 859-403
Jumper; for jumper slot; 3-way; insulated; light gray

Item No.: 859-403/000-005
Jumper; for jumper slot; 3-way; insulated; red

Item No.: 859-403/000-029
Jumper; for jumper slot; 3-way; insulated; yellow

Item No.: 859-404/000-006
Jumper; for jumper slot; 4-way; insulated; blue

Item No.: 859-404
Jumper; for jumper slot; 4-way; insulated; light gray

Item No.: 859-404/000-005
Jumper; for jumper slot; 4-way; insulated; red

Item No.: 859-404/000-029
Jumper; for jumper slot; 4-way; insulated; yellow

Item No.: 859-405/000-006
Jumper; for jumper slot; 5-way; insulated; blue

Item No.: 859-405
Jumper; for jumper slot; 5-way; insulated; light gray

Item No.: 859-405/000-005
Jumper; for jumper slot; 5-way; insulated; red

Item No.: 859-405/000-029
Jumper; for jumper slot; 5-way; insulated; yellow

Item No.: 859-406/000-006
Jumper; for jumper slot; 6-way; insulated; blue

Item No.: 859-406
Jumper; for jumper slot; 6-way; insulated; light gray

Item No.: 859-406/000-005
Jumper; for jumper slot; 6-way; insulated; red

Item No.: 859-406/000-029
Jumper; for jumper slot; 6-way; insulated; signal yellow

Item No.: 859-407/000-006
Jumper; for jumper slot; 7-way; insulated; blue

Item No.: 859-407
Jumper; for jumper slot; 7-way; insulated; light gray

Item No.: 859-407/000-005
Jumper; for jumper slot; 7-way; insulated; red

Item No.: 859-407/000-029
Jumper; for jumper slot; 7-way; insulated; yellow

Item No.: 859-408/000-006
Jumper; for jumper slot; 8-way; insulated; blue

Item No.: 859-408
Jumper; for jumper slot; 8-way; insulated; light gray

Item No.: 859-408/000-005
Jumper; for jumper slot; 8-way; insulated; red

Item No.: 859-408/000-029
Jumper; for jumper slot; 8-way; insulated; yellow

Item No.: 859-409/000-006
Jumper; for jumper slot; 9-way; insulated; blue

Item No.: 859-409
Jumper; for jumper slot; 9-way; insulated; light gray

Item No.: 859-409/000-005
Jumper; for jumper slot; 9-way; insulated; red

 Continued on next page

1.1.4.1 Jumper

Item No.: 859-409/000-029
Jumper; for jumper slot; 9-way; insulated; yellow

1.1.5 Marking

1.1.5.1 Marker

Item No.: 793-5501
WMB marking card; as card; for terminal block width 5 - 17.5 mm; stretchable 5 - 5.2 mm; plain; snap-on type; white

Item No.: 793-502
WMB marking card; as card; MARKED; 1 ... 10 (10x); not stretchable; Horizontal marking; snap-on type; white

Item No.: 793-566
WMB marking card; as card; MARKED; 1 ... 50 (2x); not stretchable; Horizontal marking; snap-on type; white

Item No.: 793-503
WMB marking card; as card; MARKED; 11 ... 20 (10x); not stretchable; Horizontal marking; snap-on type; white

Item No.: 793-504
WMB marking card; as card; MARKED; 21 ... 30 (10x); not stretchable; Horizontal marking; snap-on type; white

Item No.: 793-505
WMB marking card; as card; MARKED; 31 ... 40 (10x); not stretchable; Horizontal marking; snap-on type; white

Item No.: 793-506
WMB marking card; as card; MARKED; 41 ... 50 (10x); not stretchable; Horizontal marking; snap-on type; white

Item No.: 793-501
WMB marking card; as card; not stretchable; plain; snap-on type; white

Item No.: 2009-115
WMB-Inline; for Smart Printer; 1500 pieces on roll; stretchable 5 - 5.2 mm; plain; snap-on type; white

1.1.5.2 Marking strip

Item No.: 2009-110
Marking strips; for Smart Printer; on reel; not stretchable; plain; snap-on type; white

1.1.6 Power supply

1.1.6.1 Power supply unit

Item No.: 787-2852
Switched-mode power supply; 1-phase; 24 VDC output voltage; 1 A output current

1.1.7 Power tap

1.1.7.1 Power tap

Item No.: 855-8015
Power tap; for busbar; with fuse; Clamping connection

Item No.: 855-8006
Power tap; for busbar; with fuse; Mounting screw M6

Item No.: 855-8008
Power tap; for busbar; with fuse; Mounting screw M8

Item No.: 855-8003
Power tap; with fuse; 10 mm² (8 AWG) - 16 mm² (6 AWG); Phase

Item No.: 855-8001
Power tap; with fuse; 2,5 mm² (12 AWG) - 6 mm² (10 AWG); Phase

Item No.: 855-8004
Power tap; without fuse; 10 mm² (8 AWG) - 16 mm² (6 AWG); N-conductor

Item No.: 855-8002
Power tap; without fuse; 2,5 mm² (12 AWG) - 6 mm² (10 AWG); N-conductor

 Continued on next page

1.1.8 Relay module

1.1.8.1 Relay module

Item No.: 857-304
Relay module; Nominal input voltage: 24 VDC; 1 changeover contact; Limiting continuous current: 6 A; Yellow status indicator; Module width: 6 mm; 2,50 mm²; gray

1.1.9 Screwless end stop

1.1.9.1 Mounting accessories

Item No.: 249-117
Screwless end stop; 10 mm wide; for DIN-rail 35 x 15 and 35 x 7.5; gray

Item No.: 249-197
Screwless end stop; 14 mm wide; for DIN-rail 35 x 15 and 35 x 7.5; gray

Item No.: 249-116
Screwless end stop; 6 mm wide; for DIN-rail 35 x 15 and 35 x 7.5; gray

1.1.10 Terminal blocks

1.1.10.1 Supply module

Item No.: 857-979
Supply and through module

1.1.10.2 Through terminal block

Item No.: 857-979
Supply and through module

1.1.11 Tool

1.1.11.1 Operating tool

Item No.: 210-720
Operating tool; Blade: 3.5 x 0.5 mm; with a partially insulated shaft; multicoloured

 Continued on next page

Installation Notes

Configuring

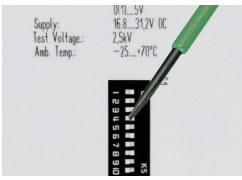

Configuration via DIP switch

Configuration via WAGO Interface Configuration Software

Configuration via WAGO Interface Configuration App

Commoning

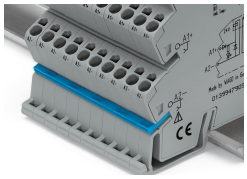

Commoning, not discrete wiring – Same outline allows use of a single in-line, push-in jumper.