Data Sheet | Item Number: 704-2014

Interface module for system wiring; Pluggable connector per DIN 41651; Male connector; 20-pole; 16-channel digital input or output; 1-wire connection; with disconnect terminal block; in mounting carrier

https://www.wago.com/704-2014

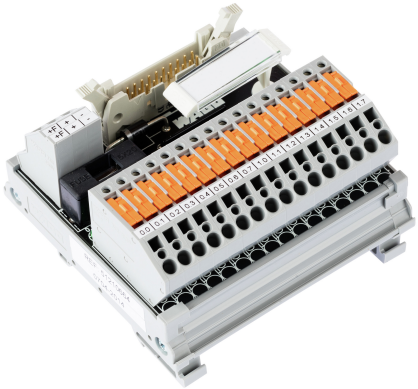

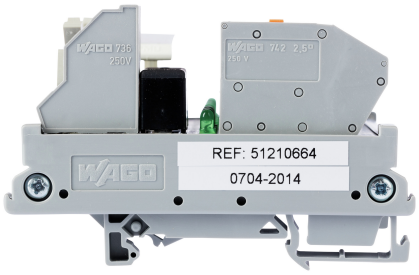

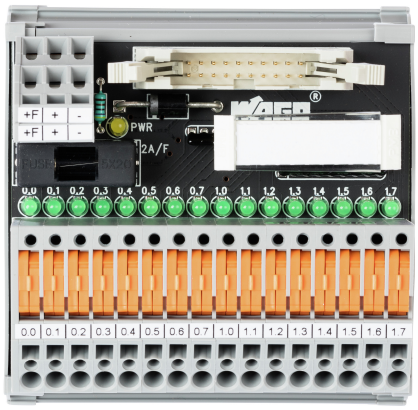

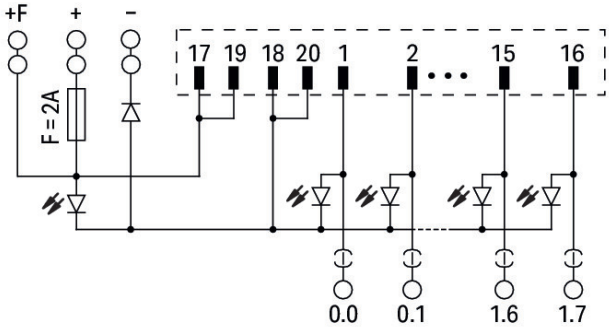

Electrical data	
Inputs/outputs	16-channel digital input or output
Circuit type	1-wire connection
Nominal operating voltage	DC 24 V
Operating voltage range	±10 %
Current consumption (status indication)	5 mA
Total current	2 A
Limiting continuous current	1 A
Status indicator	Green LED (channel) Yellow LED (power supply)
Internal fuse	Supply: 2 A
Specialty functions	With disconnect/test terminal blocks

 Continued on next page

Safety and protection

Rated voltage	50 V
Rated surge voltage	0.8 kV
Pollution degree	2

Compatibility

Siemens

Siemens S7-300	6ES7 313-5BE01-0AB0 6ES7 313-5BG04-0AB0 6ES7 313-6BE01-0AB0 6ES7 313-6BF03-0AB0 6ES7 313-6CE01-0AB0 6ES7 313-6CF03-0AB0 6ES7 314-6BF01-0AB0 6ES7 314-6BG03-0AB0 6ES7 314-6CF01-0AB0 6ES7 314-6CG03-0AB0 6ES7 321-1BH02-0AA0 6ES7 321-1BH10-0AA0 6ES7 321-1BH80-0AA0 6ES7 321-1BL00-0AA0 6ES7 321-1BL80-0AA0 6ES7 321-1BP00-0AA0 6ES7 321-7BH01-0AB0 6ES7 321-7BH80-0AA0 6ES7 322-1BH01-0AA0 6ES7 322-1BH10-0AA0 6ES7 322-1BH80-0AA0 6ES7 322-1BL00-0AA0 6ES7 322-1BP00-0AA0 6ES7 322-1EH01-0AA0 6ES7 322-8BH01/8BH10-0AB0 6ES7 323-1BL00-0AA0 6ES7 326-1BK01-0AB0 6ES7 326-1RF00-0AB0
Siemens S7-400	6ES7 421-1BL01-0AA0 6ES7 421-7BH01-0AB0 6ES7 422-1BL00-0AA0 6ES7 422-7BL00-0AB0
Siemens S7-1500	6ES7 511-1CK00-0AB0 6ES7 512-1CK00-0AB0 6ES7 521-1BH00-0AA0 6ES7 521-1BH10-0AA0 6ES7 521-1BL00-0AB0 6ES7 521-1BL10-0AA0 6ES7 521-1BP00-0AA0 6ES7 522-1BH00-0AB0 6ES7 522-1BH01-0AB0 6ES7 522-1BH10-0AA0 6ES7 522-1BL00-0AB0 6ES7 522-1BL01-0AB0 6ES7 522-1BL10-0AA0 6ES7 522-1BP00-0AA0 6ES7 523-1BL00-0AA0 6ES7 526-1BH00-0AB0
Siemens ET200SP	6ES7 131-6BH01-0BA0 6ES7 131-6BH01-2BA0 6ES7 132-6BH00-0AA0 6ES7 132-6BH00-2AA0 6ES7 132-6BH01-0BA0 6ES7 132-6BH01-2BA0

GE Fanuc

GE Fanuc 9030	IC693 MDL241 IC693 MDL640 IC693 MDL643 IC693 MDL645 IC693 MDL646 IC693 MDL655 IC693 MDL740 IC693 MDL742 IC693 MDL753
GE Fanuc RX3i	IC694 MDL655 IC694 MDL753

Schneider

Schneider Modicon TM3	TM3 DI16(G) TM3 DI16K TM3 DI32K TM3 DQ16T(G) TM3 DQ16TK TM3 DQ32TK

Schneider

Schneider Modicon M340	BMX DDI 1602 BMX DDI 3202K BMX DDI 6402K BMX DDO 1602 BMX DDO 3202K BMX DDO 6402K BMX DDM 3202K

 Continued on next page

Schneider	
Schneider Modicon Quantum	140 DDI 353 00 140 DDI 364 00 140 DDO 353 00 140 DDO 353 01 140 DDO 364 00 140 DDM 390 00 140 DSI 353 00 140 DVO 853 00
Schneider TSX	TSX DEY 16D2 TSX DEY 16FK TSX DEY 32D2K TSX DEY 64D2K TSX DMY 28FK TSX DMY 28RFK TSX DSY 16T2 TSX DSY 32T2K TSX DSY 64T2K TSX DMZ 28DT TSX DMZ 28DTK TSX DMZ 64DTK TSX DSZ 32T2 TSX DEZ 12D2K TSX DEZ 32D2
Schneider Twido	TM2 DDI 16DK TM2 DDI 32DK TM2 DDO 16TK TM2 DDO 32TK

Rockwell	
Rockwell Compact Logix	1769 - IQ16 1769 - IQ16F 1769 - IQ32 1769 - IQ32T 1769 - OB16 1769 - OB16P 1769 - OB32 1769 - OB32T
Rockwell Control Logix	1756 - IB16I 1756 - IB16ISOE 1756 - IB32 1756 - OB16E 1756 - OB16I 1756 - OB16IS 1756 - OB32

Omron	
Omron CJ1W	CJ1W-ID211 CJ1W-ID231 CJ1W-ID232 CJ1W-ID261 CJ1W-ID262 CJ1W-IDP01 CJ1W-INT01 CJ1W-MD232 CJ1W-OD212 CJ1W-OD232 CJ1W-OD262

WAGO	
WAGO I/O System 750	750-1400 750-1500 750-1502
WAGO I/O System 753	753-430 (x2) 753-431 (x2) 753-530 (x2)

Connection data

Connection 1

Connector	DIN 41651 connector; male connector
Pole number 1	20
Connection type 1	System
Note (conductor cross-section)	12 AWG: THHN, THWN
Mating direction	vertical

Connection 2

Design 2	PCB terminal blocks
Pole number 2	16
Connection type 2	Field
WAGO connector 2	WAGO 742 Series
Solid conductor 2	0.08 … 2.5 mm² / 28 … 12 AWG
Fine-stranded conductor 2	0.08 … 2.5 mm² / 28 … 12 AWG
Strip length 2	8 … 9 mm / 0.31 … 0.35 inches

Connection 3

Design 3	PCB terminal blocks (double-deck)
Pole number 3	6
Connection type 3	Power supply
WAGO connector 3	WAGO 736 Series
Solid conductor 3	0.08 … 2.5 mm² / 28 … 12 AWG
Fine-stranded conductor 3	0.08 … 2.5 mm² / 28 … 12 AWG
Strip length 3	5 … 6 mm / 0.2 … 0.24 inches

 Continued on next page

Physical data

Width	85 mm / 3.346 inches
Height	85 mm / 3.346 inches
Depth from upper-edge of DIN-rail	50 mm / 1.969 inches

Mechanical data

Mounting type	DIN-35 rail

Material data

Fire load	2.626 MJ
Weight	150 g

Environmental requirements

Ambient temperature (operation)	-20 … +50 °C
Ambient temperature (storage)	-40 … +70 °C
Relative humidity	≤ 85% (non-condensing)

Commercial data

Product Group	30 (WAGO France)
ETIM 8.0	EC002780
ETIM 7.0	EC002780
PU (SPU)	1 pcs
Packaging type	Box
Country of origin	FR
GTIN	4050821170006
Customs tariff number	85369010000

Environmental Product Compliance

RoHS Compliance Status	Compliant,No Exemption

Downloads

Environmental Product Compliance

Compliance Search

Environmental Product Compliance 704-2014

Documentation

System Description

WAGO System Wiring, Selection Guide	pdf 533.15 KB	