Data Sheet | Item Number: 235-801/333-000

Stackable PCB terminal block; 2.5 mm²; Pin spacing 10/10.16 mm; 1-pole; PUSH WIRE®; with test port; 2,50 mm²; gray

https://www.wago.com/235-801/333-000

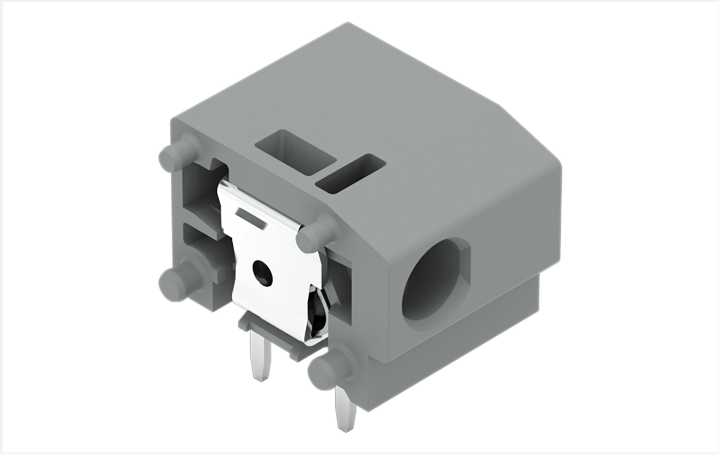

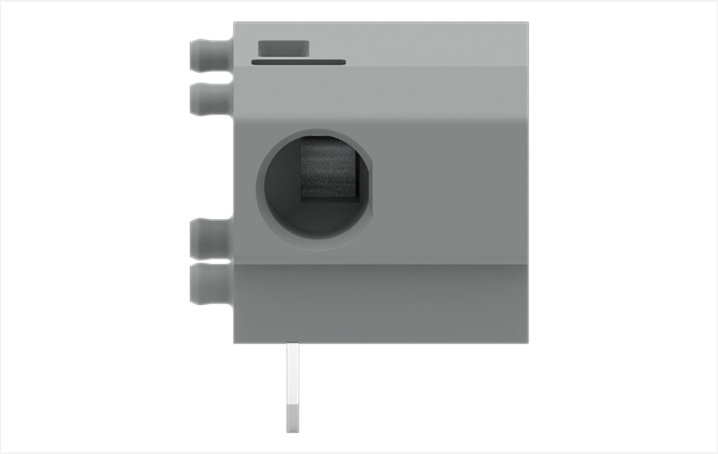

Color: gray

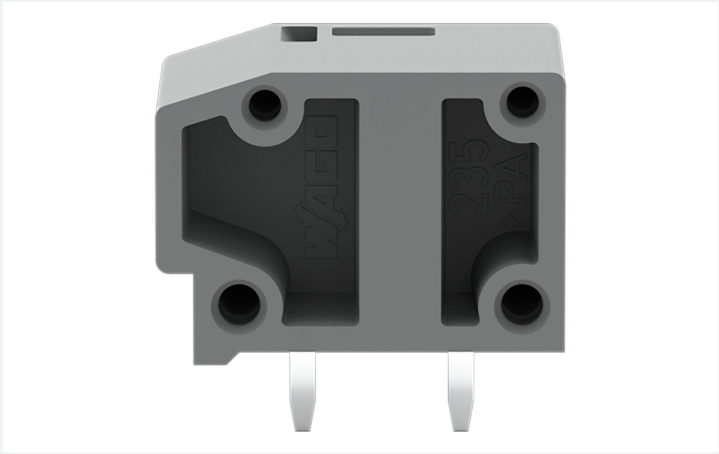

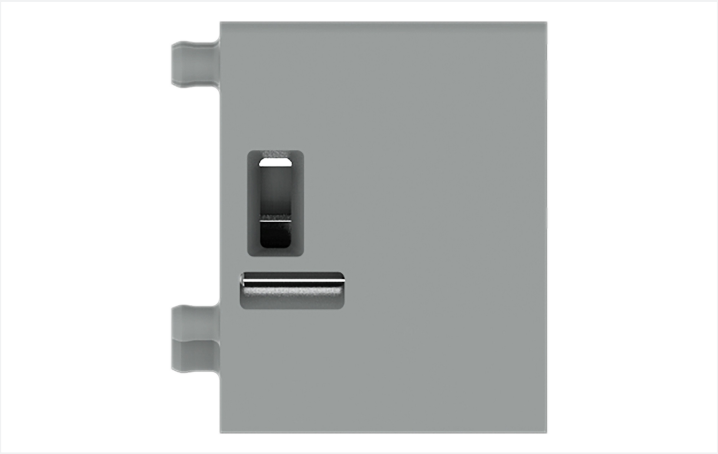

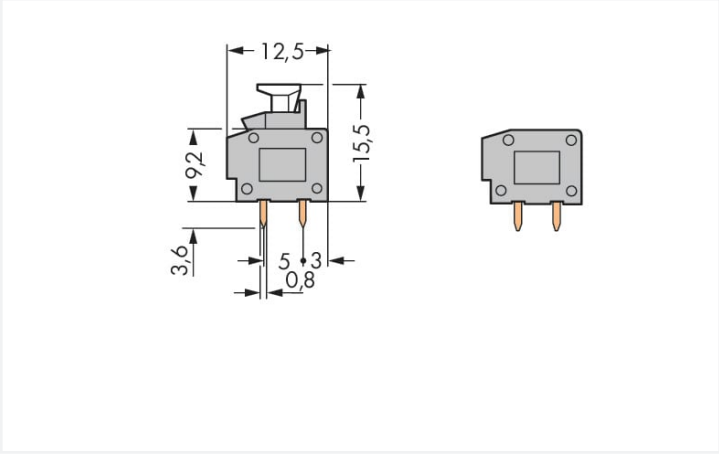

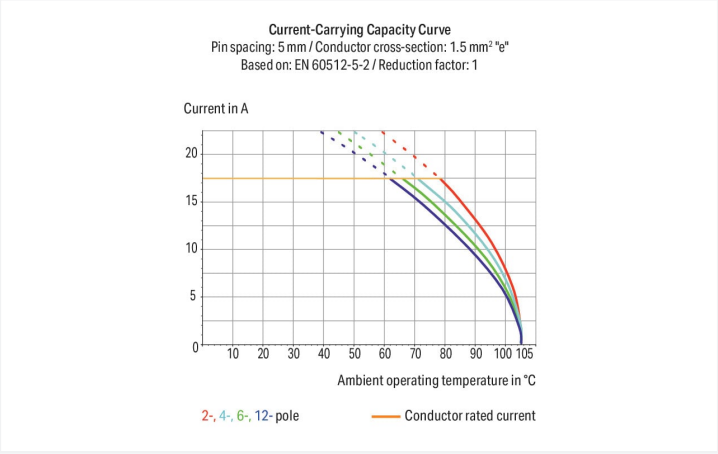

Dimensions in mm

- Low-profile modular PCB terminal blocks with PUSH WIRE® connection for custom terminal strip assemblies
- Push-in termination of solid conductors
- Double solder pins for high mechanical stability
- Conductor removal via screwdriver (2.5 mm blade width)
- Set to metric or inch pin spacing by compressing PCB terminal strips or pulling them apart
- Also available with a test slot

Notes

Variants:	Other colors Versions for Ex i Other versions (or variants) can be requested from WAGO Sales or configured at https://configurator.wago.com/.

Electrical data

Ratings per	IEC/EN 60664-1		
Overvoltage category	III	III	II
Pollution degree	3	2	2
Nominal voltage	630 V	1000 V	1000 V
Rated surge voltage	8 kV	8 kV	8 kV
Rated current	24 A	24 A	24 A

Approvals per	UL 1059		
Use group	B	C	D
Rated voltage	300 V	-	300 V
Rated current	10 A	-	10 A

Ratings per CSA	
Rated voltage CSA (Use Group B)	300 V
Rated current CSA (Use Group B)	15 A

Connection data

Connection points	1
Total number of potentials	1
Number of connection types	1
Number of levels	1

Connection 1	
Connection technology	PUSH WIRE®
Actuation type	Operating tool
Solid conductor	0.5 … 2.5 mm² / 20 … 14 AWG
Fine-stranded conductor; with insulated ferrule	0.25 … 1.5 mm²
Fine-stranded conductor; with uninsulated ferrule	0.25 … 1.5 mm²
Strip length	9 … 10 mm / 0.35 … 0.39 inches
Conductor connection direction to PCB	0 °
Pole number	1

Physical data

Pin spacing	10/10.16 mm / 0.394/0.4 inches
Width	11.5 mm / 0.453 inches
Height	12.8 mm / 0.504 inches
Height from the surface	9.2 mm / 0.362 inches
Depth	12.5 mm / 0.492 inches
Solder pin length	3.6 mm
Solder pin dimensions	0.8 x 0.4 mm
Drilled hole diameter with tolerance	1 $^{(+0.1)}$ mm

PCB contact

PCB contact	THT
Solder pin arrangement	within the terminal block (in-line)
Number of solder pins per potential	2

 Continued on next page

Material data

Note (material data)	Information on material specifications can be found here
Color	gray
Material group	I
Insulation material	Polyamide (PA66)
Flammability class per UL94	V0
Clamping spring material	Chrome-nickel spring steel (CrNi)
Contact material	Electrolytic copper (E_{Cu})
Contact plating	Tin
Fire load	0.021 MJ
Weight	1 g

Environmental requirements

Limit temperature range	-60 … +105 °C

Commercial data

Product Group	4 (Printed Circuit Connectors)
eCl@ss 10.0	27-44-04-01
eCl@ss 9.0	27-44-04-01
ETIM 8.0	EC002643
ETIM 7.0	EC002643
PU (SPU)	400 (100) pcs
Packaging type	Box
Country of origin	CN
GTIN	4044918833134
Customs tariff number	85369010000

Environmental Product Compliance

RoHS Compliance Status	Compliant,No Exemption

Approvals / Certificates

General approvals

Approval	Standard	Certificate Name
UL UL International Germany GmbH	-	E45172

 Continued on next page

Downloads

Environmental Product Compliance

Compliance Search

Environmental Product Compliance
235-801/333-000

Documentation

Additional Information

Technical Section	03.04.2019	pdf 2010.85 KB

CAD/CAE-Data

CAE data

EPLAN Data Portal
235-801/333-000

1 Compatible Products

1.1 Required Accessories

1.1.1 End plate

1.1.1.1 End plate

Item No.: 235-100
End plate; snap-fit type; 1 mm thick; gray

1.2 Optional Accessories

1.2.1 Ferrule

1.2.1.1 Ferrule

Item No.: 216-301
Ferrule; Sleeve for 0.25 mm² / AWG 24; insulated; electro-tin plated; yellow

Item No.: 216-321
Ferrule; Sleeve for 0.25 mm² / AWG 24; insulated; electro-tin plated; yellow

Item No.: 216-151
Ferrule; Sleeve for 0.25 mm² / AWG 24; uninsulated; electro-tin plated

Item No.: 216-131
Ferrule; Sleeve for 0.25 mm² / AWG 24; uninsulated; electro-tin plated; silver-colored

Item No.: 216-302
Ferrule; Sleeve for 0.34 mm² / 22 AWG; insulated; electro-tin plated; light turquoise

Item No.: 216-322
Ferrule; Sleeve for 0.34 mm² / 22 AWG; insulated; electro-tin plated; light turquoise

Item No.: 216-132
Ferrule; Sleeve for 0.34 mm² / AWG 24; uninsulated; electro-tin plated

Item No.: 216-152
Ferrule; Sleeve for 0.34 mm² / AWG 24; uninsulated; electro-tin plated

Item No.: 216-241
Ferrule; Sleeve for 0.5 mm² / 20 AWG; insulated; electro-tin plated; electrolytic copper; gastight crimped; acc. to DIN 46228, Part 4/09.90; white

Item No.: 216-201
Ferrule; Sleeve for 0.5 mm² / 20 AWG; insulated; electro-tin plated; white

Item No.: 216-221
Ferrule; Sleeve for 0.5 mm² / 20 AWG; insulated; electro-tin plated; white

Item No.: 216-141
Ferrule; Sleeve for 0.5 mm² / 20 AWG; uninsulated; electro-tin plated; electrolytic copper; gastight crimped; acc. to DIN 46228, Part 1/08.92

 Continued on next page

1.2.1.1 Ferrule

Item No.: 216-101
Ferrule; Sleeve for 0.5 mm² / AWG 22; uninsulated; electro-tin plated; silver-colored

Item No.: 216-121
Ferrule; Sleeve for 0.5 mm² / AWG 22; uninsulated; electro-tin plated; silver-colored

Item No.: 216-242
Ferrule; Sleeve for 0.75 mm² / 18 AWG; insulated; electro-tin plated; electrolytic copper; gastight crimped; acc. to DIN 46228, Part 4/09.90; gray

Item No.: 216-262
Ferrule; Sleeve for 0.75 mm² / 18 AWG; insulated; electro-tin plated; electrolytic copper; gastight crimped; acc. to DIN 46228, Part 4/09.90; gray

Item No.: 216-202
Ferrule; Sleeve for 0.75 mm² / 18 AWG; insulated; electro-tin plated; gray

Item No.: 216-222
Ferrule; Sleeve for 0.75 mm² / 18 AWG; insulated; electro-tin plated; gray

Item No.: 216-142
Ferrule; Sleeve for 0.75 mm² / 18 AWG; uninsulated; electro-tin plated; electrolytic copper; gastight crimped; acc. to DIN 46228, Part 1/08.92

Item No.: 216-102
Ferrule; Sleeve for 0.75 mm² / AWG 20; uninsulated; electro-tin plated; silver-colored

Item No.: 216-122
Ferrule; Sleeve for 0.75 mm² / AWG 20; uninsulated; electro-tin plated; silver-colored

Item No.: 216-243
Ferrule; Sleeve for 1 mm² / AWG 18; insulated; electro-tin plated; electrolytic copper; gastight crimped; acc. to DIN 46228, Part 4/09.90; red

Item No.: 216-263
Ferrule; Sleeve for 1 mm² / AWG 18; insulated; electro-tin plated; electrolytic copper; gastight crimped; acc. to DIN 46228, Part 4/09.90; red

Item No.: 216-203
Ferrule; Sleeve for 1 mm² / AWG 18; insulated; electro-tin plated; red

Item No.: 216-223
Ferrule; Sleeve for 1 mm² / AWG 18; insulated; electro-tin plated; red

Item No.: 216-103
Ferrule; Sleeve for 1 mm² / AWG 18; uninsulated; electro-tin plated

Item No.: 216-143
Ferrule; Sleeve for 1 mm² / AWG 18; uninsulated; electro-tin plated; electrolytic copper; gastight crimped; acc. to DIN 46228, Part 1/08.92

Item No.: 216-123
Ferrule; Sleeve for 1 mm² / AWG 18; uninsulated; electro-tin plated; silver-colored

Item No.: 216-204
Ferrule; Sleeve for 1.5 mm² / AWG 16; insulated; electro-tin plated; black

Item No.: 216-224
Ferrule; Sleeve for 1.5 mm² / AWG 16; insulated; electro-tin plated; black

Item No.: 216-244
Ferrule; Sleeve for 1.5 mm² / AWG 16; insulated; electro-tin plated; electrolytic copper; gastight crimped; acc. to DIN 46228, Part 4/09.90; black

Item No.: 216-264
Ferrule; Sleeve for 1.5 mm² / AWG 16; insulated; electro-tin plated; electrolytic copper; gastight crimped; acc. to DIN 46228, Part 4/09.90; black

Item No.: 216-284
Ferrule; Sleeve for 1.5 mm² / AWG 16; insulated; electro-tin plated; electrolytic copper; gastight crimped; acc. to DIN 46228, Part 4/09.90; black

Item No.: 216-124
Ferrule; Sleeve for 1.5 mm² / AWG 16; uninsulated; electro-tin plated

Item No.: 216-144
Ferrule; Sleeve for 1.5 mm² / AWG 16; uninsulated; electro-tin plated; electrolytic copper; gastight crimped; acc. to DIN 46228, Part 1/08.92; silver-colored

Item No.: 216-104
Ferrule; Sleeve for 1.5 mm² / AWG 16; uninsulated; electro-tin plated; silver-colored

Item No.: 216-289
Ferrule; Sleeve for 10 mm² / AWG 8; insulated; electro-tin plated; electrolytic copper; gastight crimped; acc. to DIN 46228, Part 4/09.90; red

Item No.: 216-209
Ferrule; Sleeve for 10 mm² / AWG 8; insulated; electro-tin plated; red

Item No.: 216-109
Ferrule; Sleeve for 10 mm² / AWG 8; uninsulated; electro-tin plated

Item No.: 216-210
Ferrule; Sleeve for 16 mm² / AWG 6; insulated; electro-tin plated; electrolytic copper; gastight crimped; acc. to DIN 46228, Part 4/09.90; blue

Item No.: 216-110
Ferrule; Sleeve for 16 mm² / AWG 6; uninsulated; electro-tin plated; brown metallic

Item No.: 216-205
Ferrule; Sleeve for 2.08 mm² / AWG 14; insulated; electro-tin plated; yellow

Item No.: 216-206
Ferrule; Sleeve for 2.5 mm² / AWG 14; insulated; electro-tin plated; blue

Item No.: 216-246
Ferrule; Sleeve for 2.5 mm² / AWG 14; insulated; electro-tin plated; electrolytic copper; gastight crimped; acc. to DIN 46228, Part 4/09.90; blue

Item No.: 216-266
Ferrule; Sleeve for 2.5 mm² / AWG 14; insulated; electro-tin plated; electrolytic copper; gastight crimped; acc. to DIN 46228, Part 4/09.90; blue

Item No.: 216-286
Ferrule; Sleeve for 2.5 mm² / AWG 14; insulated; electro-tin plated; electrolytic copper; gastight crimped; acc. to DIN 46228, Part 4/09.90; blue

Item No.: 216-106
Ferrule; Sleeve for 2.5 mm² / AWG 14; uninsulated; electro-tin plated; silver-colored

Item No.: 216-267
Ferrule; Sleeve for 4 mm² / AWG 12; insulated; electro-tin plated; electrolytic copper; gastight crimped; acc. to DIN 46228, Part 4/09.90; gray

Item No.: 216-287
Ferrule; Sleeve for 4 mm² / AWG 12; insulated; electro-tin plated; electrolytic copper; gastight crimped; acc. to DIN 46228, Part 4/09.90; gray

Item No.: 216-207
Ferrule; Sleeve for 4 mm² / AWG 12; insulated; electro-tin plated; gray

Item No.: 216-107
Ferrule; Sleeve for 4 mm² / AWG 12; uninsulated; electro-tin plated

Item No.: 216-208
Ferrule; Sleeve for 6 mm² / AWG 10; insulated; electro-tin plated; electrolytic copper; gastight crimped; acc. to DIN 46228, Part 4/09.90; yellow

 Continued on next page

1.2.1.1 Ferrule

Item No.: 216-288
Ferrule; Sleeve for 6 mm² / AWG 10; insulated; electro-tin plated; electrolytic copper; gastight crimped; acc. to DIN 46228, Part 4/09.90; yellow

Item No.: 216-108
Ferrule; Sleeve for 6 mm² / AWG 10; uninsulated; electro-tin plated; silver-colored

Installation Notes

Conductor termination

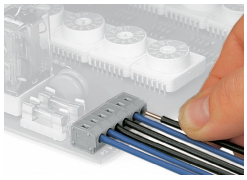

Inserting a solid conductor via push-in termination.

Conductor removal

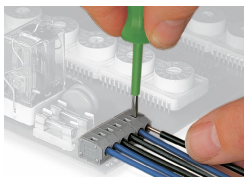

Removing a conductor via screwdriver (2.5 mm blade width).