Data Sheet | Item Number: 2086-3105

THR PCB terminal block; push-button; 1.5 mm²; Pin spacing 5 mm; 5-pole; Push-in CAGE CLAMP®; 1,50 mm²; black

https://www.wago.com/2086-3105

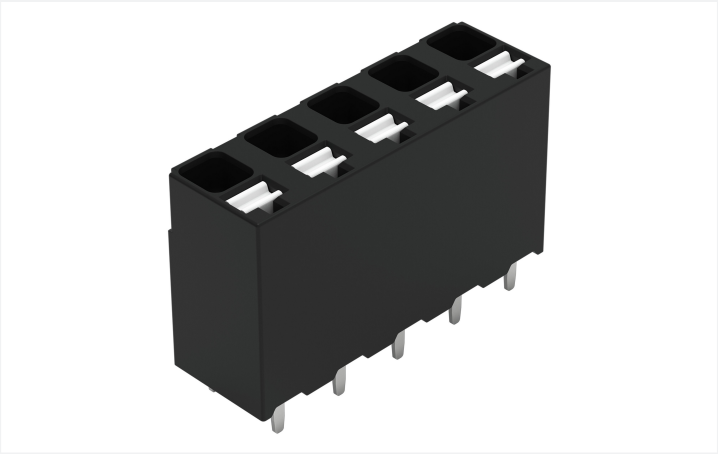

Color: ■ black

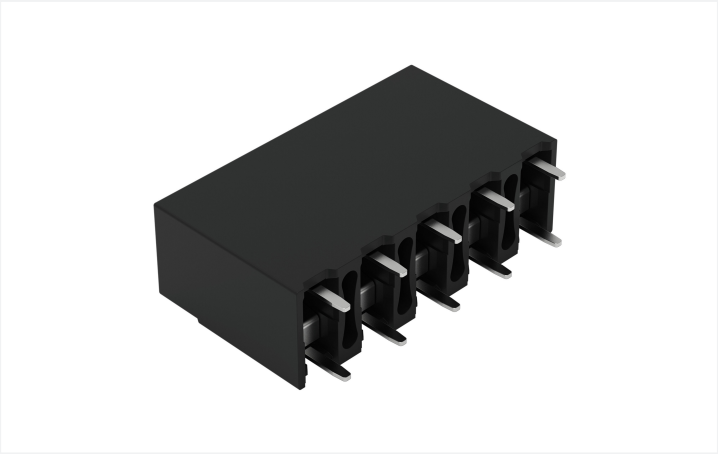

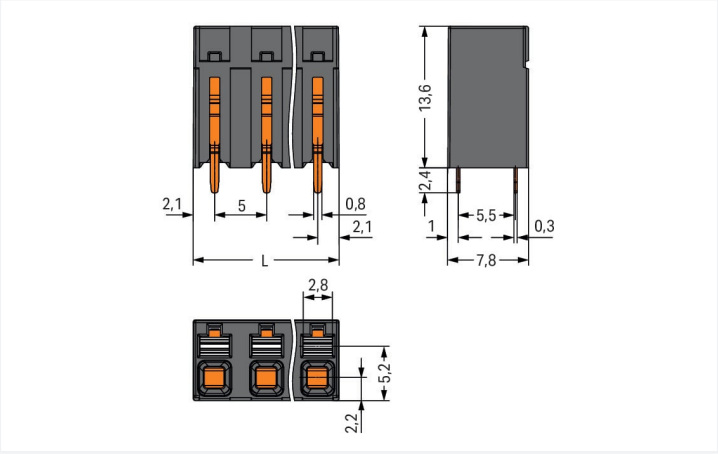

Dimensions in mm

L = (pole no. – 1) x pin spacing + 4.2 mm

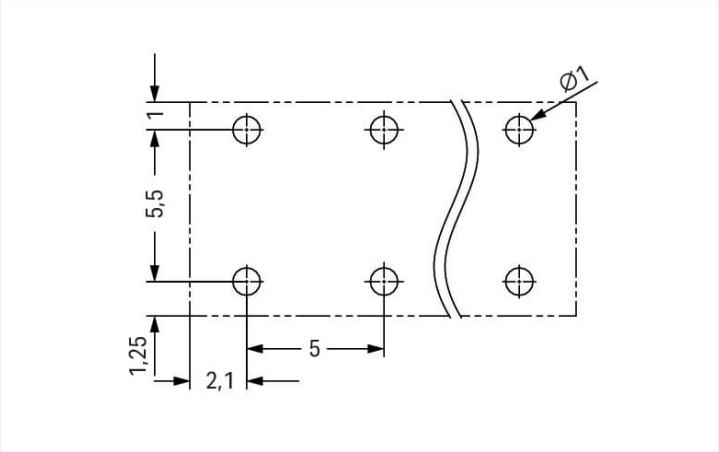

Dimensions in mm

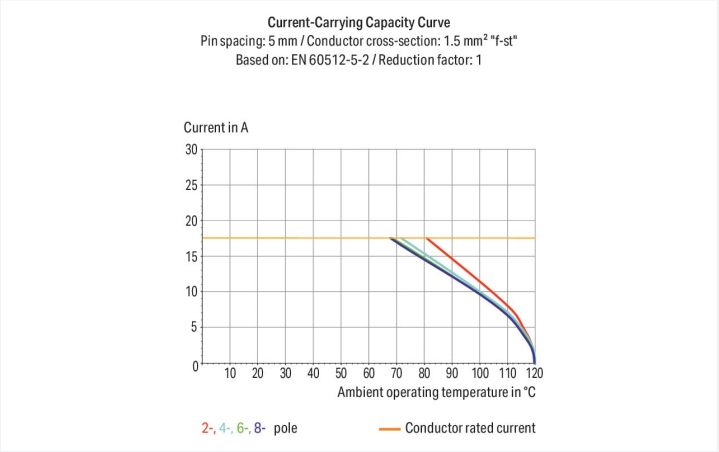

- Ideal for compact device connection, panel feedthrough and tight spaces
- Push-in CAGE CLAMP® termination of solid and ferruled conductors
- SMD and THR versions available
- Push-button moves parallel to conductor entry
- Conductor connection and mating direction parallel or perpendicular to the PCB
- Optionally available with in-line or staggered pins (3.5 and 5 mm pin spacing)

Notes

Note	Application notes: Suitable for lead-free, reflow-soldering profiles per DIN EN 61760-1 and IEC 60068-2-58 up to max. 260°C peak temperature. Due to application-specific variables (component configuration and orientation, type of soldering machine, solder paste), trial runs are recommended to ensure product and process compatibility under actual manufacturing conditions.

 Continued on next page

Electrical data

Ratings per	IEC/EN 60664-1		
Overvoltage category	III	III	II
Pollution degree	3	2	2
Nominal voltage	320 V	320 V	630 V
Rated surge voltage	4 kV	4 kV	4 kV
Rated current	17.5 A	17.5 A	17.5 A

Approvals per	UL 1059		
Use group	B	C	D
Rated voltage	300 V	-	300 V
Rated current	14 A	-	10 A

Approvals per	CSA		
Use group	B	C	D
Rated voltage	300 V	-	300 V
Rated current	14 A	-	14 A

Connection data

Connection points	5
Total number of potentials	5
Number of connection types	1
Number of levels	1

Connection 1	
Connection technology	Push-in CAGE CLAMP®
Actuation type	Push-button
Solid conductor	0.14 … 1.5 mm² / 28 … 16 AWG
Fine-stranded conductor	0.14 … 1.5 mm² / 26 … 14 AWG
Fine-stranded conductor; with insulated ferrule	0.25 … 0.75 mm²
Fine-stranded conductor; with uninsulated ferrule	0.25 … 1.5 mm²
Strip length	8 … 9 mm / 0.31 … 0.35 inches
Conductor connection direction to PCB	90 °
Pole number	5

Physical data

Pin spacing	5 mm / 0.197 inches
Width	24.2 mm / 0.953 inches
Height	16 mm / 0.63 inches
Height from the surface	13.6 mm / 0.535 inches
Depth	7.8 mm / 0.307 inches
Solder pin length	2.4 mm
Solder pin dimensions	0.3 x 0.8 mm
Plated through-hole diameter (THR)	1 $^{(+0.1)}$ mm

PCB contact

PCB contact	THR
Solder pin arrangement	over the entire terminal strip (in-line)
Number of solder pins per potential	2

 Continued on next page

Material data

Note (material data)	Information on material specifications can be found here
Color	black
Material group	I
Insulation material	Polyphthalamide (PPA GF)
Flammability class per UL94	V0
Clamping spring material	Chrome-nickel spring steel (CrNi)
Contact material	Electrolytic copper (E_{Cu})
Contact plating	Tin
Fire load	0.077 MJ
Weight	3 g
MSL per J-STD 020D	1

Environmental requirements

Limit temperature range	-60 … +105 °C
Processing temperature	-35 … +60 °C
Continuous operating temperature	-60 … +105 °C

Commercial data

ETIM 8.0	EC002643
ETIM 7.0	EC002643
PU (SPU)	132 pcs
Country of origin	CH
GTIN	4066966142372
Customs tariff number	85369010000

Environmental Product Compliance

RoHS Compliance Status	Compliant,No Exemption

Approvals / Certificates

General approvals

Approval	Standard	Certificate Name
CB DEKRA Certification B.V.	IEC 60947-7-4	NL-74022
CSA CSA Group	C22.2	80060692
KEMA/KEUR DEKRA Certification B.V.	EN 60947-7-4	71-119449
UL Underwriters Laboratories Inc.	UL 1059	E45172

 Continued on next page

Downloads

Environmental Product Compliance

Compliance Search

Environmental Product Compliance 2086-3105

Documentation

Additional Information

Technical Section	03.04.2019	pdf 2010.85 KB	
		pdf 535.32 KB	

CAD/CAE-Data

CAD data

2D/3D Models 2086-3105

CAE data

ZUKEN Portal 2086-3105

1 Compatible Products

1.1 Optional Accessories

1.1.1 Ferrule

1.1.1.1 Ferrule

Item No.: 216-301
Ferrule; Sleeve for 0.25 mm² / AWG 24; insulated; electro-tin plated; yellow

Item No.: 216-151
Ferrule; Sleeve for 0.25 mm² / AWG 24; uninsulated; electro-tin plated

Item No.: 216-131
Ferrule; Sleeve for 0.25 mm² / AWG 24; uninsulated; electro-tin plated; silver-colored

Item No.: 216-302
Ferrule; Sleeve for 0.34 mm² / 22 AWG; insulated; electro-tin plated; light turquoise

Item No.: 216-132
Ferrule; Sleeve for 0.34 mm² / AWG 24; uninsulated; electro-tin plated

Item No.: 216-152
Ferrule; Sleeve for 0.34 mm² / AWG 24; uninsulated; electro-tin plated

Item No.: 216-241
Ferrule; Sleeve for 0.5 mm² / 20 AWG; insulated; electro-tin plated; electrolytic copper; gastight crimped; acc. to DIN 46228, Part 4/09.90; white

Item No.: 216-201
Ferrule; Sleeve for 0.5 mm² / 20 AWG; insulated; electro-tin plated; white

Item No.: 216-141
Ferrule; Sleeve for 0.5 mm² / 20 AWG; uninsulated; electro-tin plated; electrolytic copper; gastight crimped; acc. to DIN 46228, Part 1/08.92

Item No.: 216-101
Ferrule; Sleeve for 0.5 mm² / AWG 22; uninsulated; electro-tin plated; silver-colored

Item No.: 216-121
Ferrule; Sleeve for 0.5 mm² / AWG 22; uninsulated; electro-tin plated; silver-colored

Item No.: 216-242
Ferrule; Sleeve for 0.75 mm² / 18 AWG; insulated; electro-tin plated; electrolytic copper; gastight crimped; acc. to DIN 46228, Part 4/09.90; gray

Item No.: 216-202
Ferrule; Sleeve for 0.75 mm² / 18 AWG; insulated; electro-tin plated; gray

Item No.: 216-142
Ferrule; Sleeve for 0.75 mm² / 18 AWG; uninsulated; electro-tin plated; electrolytic copper; gastight crimped; acc. to DIN 46228, Part 1/08.92

Item No.: 216-102
Ferrule; Sleeve for 0.75 mm² / AWG 20; uninsulated; electro-tin plated; silver-colored

Item No.: 216-103
Ferrule; Sleeve for 1 mm² / AWG 18; uninsulated; electro-tin plated

Continued on next page

1.1.1.1 Ferrule

Item No.: 216-143
Ferrule; Sleeve for 1 mm² / AWG 18; uninsulated; electro-tin plated; electrolytic copper; gastight crimped; acc. to DIN 46228, Part 1/08.92

Item No.: 216-144
Ferrule; Sleeve for 1.5 mm² / AWG 16; uninsulated; electro-tin plated; electrolytic copper; gastight crimped; acc. to DIN 46228, Part 1/08.92; silver-colored

Item No.: 216-104
Ferrule; Sleeve for 1.5 mm² / AWG 16; uninsulated; electro-tin plated; silver-colored

1.1.2 Test and measurement

1.1.2.1 Testing accessories

Item No.: 859-500
WAGO Test pin; 1 mm Ø; 30 V AC / 60 V DC; CAT0; 1 A; 10 mm uninsulated; Test lead for soldering up to 0,5mm²

Item No.: 735-500
WAGO Test pin; 1 mm Ø; 30 V AC / 60 V DC; CAT0; 1 A; 6 mm uninsulated; Test lead for soldering up to 0,5mm²

1.1.3 Tool

1.1.3.1 Operating tool

Item No.: 210-719
Operating tool; Blade: 2.5 x 0.4 mm; with a partially insulated shaft

Installation Notes

Conductor termination

Inserting solid conductor via push-in termination.

Conductor termination

Inserting and removing fine-stranded conductors via push-buttons.

 Continued on next page

Conductor removal

Removing a conductor via push-button.

Testing

Testing via 1 mm Ø test pin.
Touch contact with current bar

Marking

Pole marking via direct marking perpendicular to conductor entry.