# Data Sheet | Item Number: 2086-1230

THR PCB terminal block; push-button; 1.5 mm²; Pin spacing 3.5 mm; 10-pole; Push-in CAGE CLAMP®; 1,50 mm²; black

https://www.wago.com/2086-1230

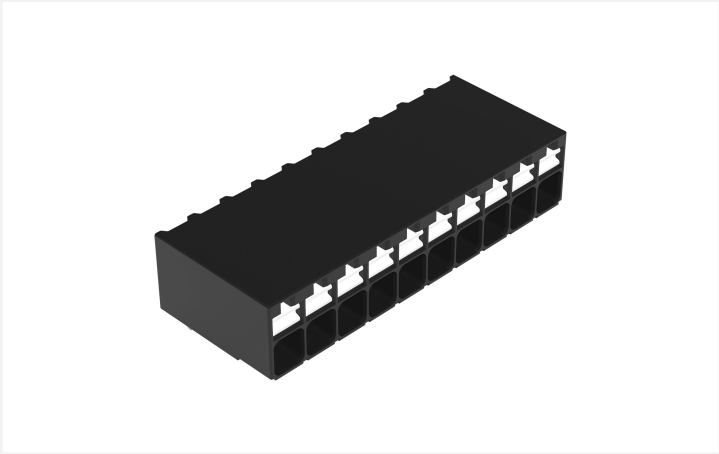

Color: ■ black

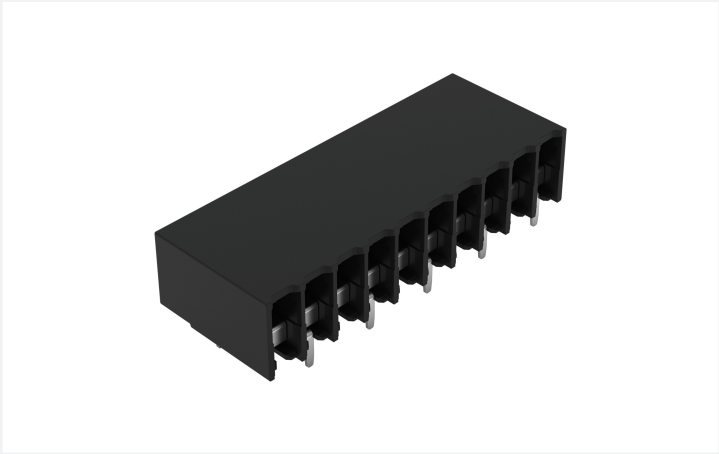

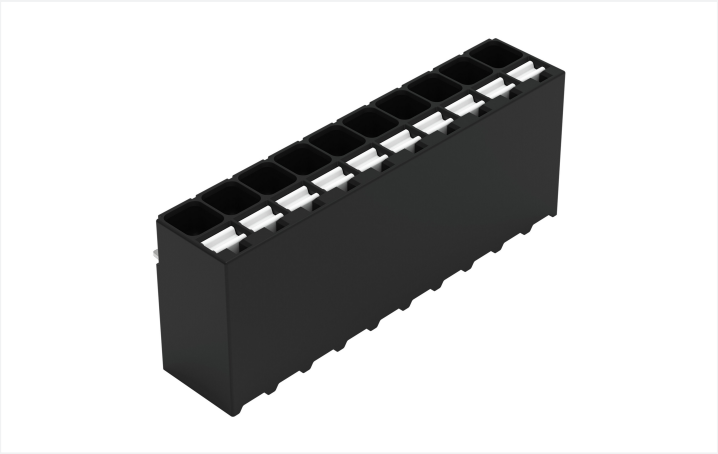

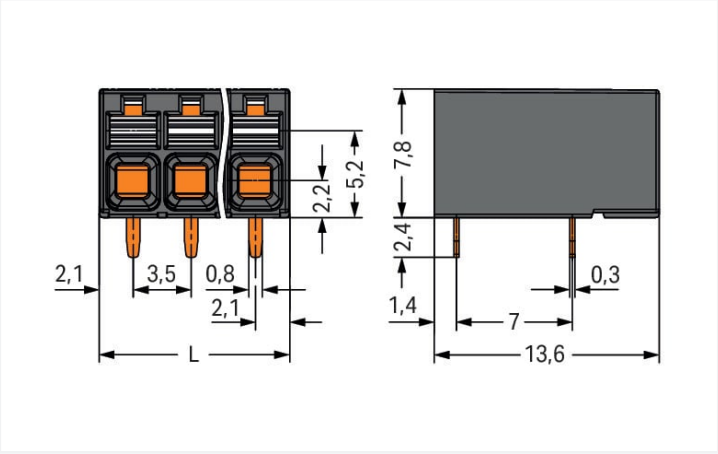


Dimensions in mm

L = (pole no. – 1) x pin spacing + 4.2 mm

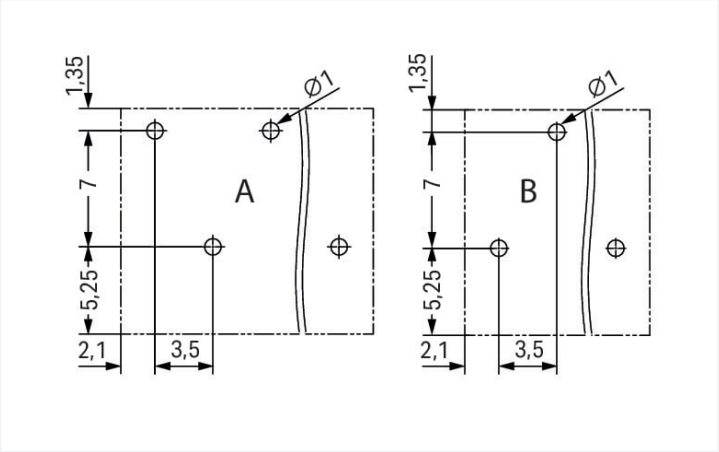


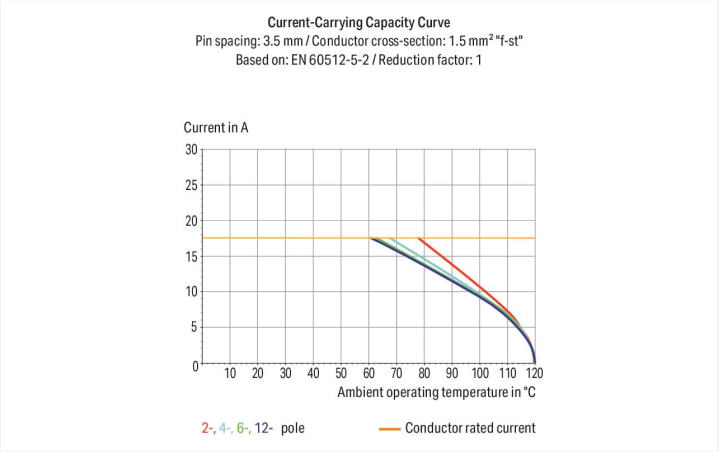


Dimensions in mm
A = Even pole numbers
B = Odd pole numbers

- Ideal for compact device connection, panel feedthrough and tight spaces
- Push-in CAGE CLAMP® termination of solid and ferruled conductors
- SMD and THR versions available
- Push-button moves parallel to conductor entry
- Conductor connection and mating direction parallel or perpendicular to the PCB
- Optionally available with in-line or staggered pins (3.5 and 5 mm pin spacing)

## Notes

| | |
|---|---|
| Note | Application notes:<br>Suitable for lead-free, reflow-soldering profiles per DIN EN 61760-1 and IEC 60068-2-58 up to max. 260°C peak temperature. Due to application-specific variables (component configuration and orientation, type of soldering machine, solder paste), trial runs are recommended to ensure product and process compatibility under actual manufacturing conditions. |

 Continued on next page

## Electrical data

| Ratings per | IEC/EN 60664-1 | | |
|---|---|---|---|
| Overvoltage category | III | III | II |
| Pollution degree | 3 | 2 | 2 |
| Nominal voltage | 250 V | 320 V | 630 V |
| Rated surge voltage | 4 kV | 4 kV | 4 kV |
| Rated current | 17.5 A | 17.5 A | 17.5 A |

| Approvals per | UL 1059 | | |
|---|---|---|---|
| Use group | B | C | D |
| Rated voltage | 300 V | - | 300 V |
| Rated current | 14 A | - | 10 A |

| Approvals per | CSA | | |
|---|---|---|---|
| Use group | B | C | D |
| Rated voltage | 300 V | - | 300 V |
| Rated current | 14 A | - | 14 A |

## Connection data

| | |
|---|---|
| Connection points | 10 |
| Total number of potentials | 10 |
| Number of connection types | 1 |
| Number of levels | 1 |

| Connection 1 | |
|---|---|
| Connection technology | Push-in CAGE CLAMP® |
| Actuation type | Push-button |
| Solid conductor | 0.14 … 1.5 mm² / 28 … 16 AWG |
| Fine-stranded conductor | 0.14 … 1.5 mm² / 26 … 14 AWG |
| Fine-stranded conductor; with insulated ferrule | 0.25 … 0.75 mm² |
| Fine-stranded conductor; with uninsulated ferrule | 0.25 … 1.5 mm² |
| Strip length | 8 … 9 mm / 0.31 … 0.35 inches |
| Conductor connection direction to PCB | 0 ° |
| Pole number | 10 |

## Physical data

| | |
|---|---|
| Pin spacing | 3.5 mm / 0.138 inches |
| Width | 37.7 mm / 1.406 inches |
| Height | 10.2 mm / 0.402 inches |
| Height from the surface | 7.8 mm / 0.307 inches |
| Depth | 13.6 mm / 0.535 inches |
| Solder pin length | 2.4 mm |
| Solder pin dimensions | 0.3 x 0.8 mm |
| Plated through-hole diameter (THR) | 1 $^{(+0.1)}$ mm |

## PCB contact

| | |
|---|---|
| PCB contact | THR |
| Solder pin arrangement | over the entire terminal strip (staggered) |
| Number of solder pins per potential | 1 |

 Continued on next page

## Material data

| | |
|---|---|
| Note (material data) | <a href="https://www.wago.com/us/material-specifications">Information on material specifications can be found here</a> |
| Color | black |
| Material group | I |
| Insulation material | Polyphthalamide (PPA GF) |
| Flammability class per UL94 | V0 |
| Clamping spring material | Chrome-nickel spring steel (CrNi) |
| Contact material | Electrolytic copper ($E_{Cu}$) |
| Contact plating | Tin |
| Fire load | 0.102 MJ |
| Weight | 4.8 g |
| MSL per J-STD 020D | 1 |

## Environmental requirements

| | |
|---|---|
| Limit temperature range | -60 … +105 °C |
| Processing temperature | -35 … +60 °C |
| Continuous operating temperature | -60 … +105 °C |

## Commercial data

| | |
|---|---|
| ETIM 8.0 | EC002643 |
| ETIM 7.0 | EC002643 |
| PU (SPU) | 84 pcs |
| Country of origin | CH |
| GTIN | 4066966141702 |
| Customs tariff number | 85369010000 |

## Environmental Product Compliance

| | |
|---|---|
| RoHS Compliance Status | Compliant,No Exemption |

## Approvals / Certificates

### General approvals

| Approval | Standard | Certificate Name |
|---|---|---|
| CB<br>DEKRA Certification B.V. | IEC 60947-7-4 | NL-74022 |
| CSA<br>CSA Group | C22.2 | 80060692 |
| KEMA/KEUR<br>DEKRA Certification B.V. | EN 60947-7-4 | 71-119449 |
| UL<br>Underwriters Laboratories Inc. | UL 1059 | E45172 |

 Continued on next page

## Downloads

### Environmental Product Compliance

**Compliance Search**

Environmental Product Compliance 2086-1230

### Documentation

**Additional Information**

| | | | |
|---|---|---|---|
| Technical Section | 03.04.2019 | pdf<br>2010.85 KB | |
| | | pdf<br>535.32 KB | |

### CAD/CAE-Data

**CAD data**

2D/3D Models 2086-1230

**CAE data**

ZUKEN Portal 2086-1230

## 1 Compatible Products

### 1.1 Optional Accessories

#### 1.1.1 Ferrule

##### 1.1.1.1 Ferrule

Item No.: 216-301
Ferrule; Sleeve for 0.25 mm² / AWG 24; insulated; electro-tin plated; yellow

Item No.: 216-151
Ferrule; Sleeve for 0.25 mm² / AWG 24; uninsulated; electro-tin plated



Item No.: 216-131
Ferrule; Sleeve for 0.25 mm² / AWG 24; uninsulated; electro-tin plated; silver-colored



Item No.: 216-302
Ferrule; Sleeve for 0.34 mm² / 22 AWG; insulated; electro-tin plated; light turquoise



Item No.: 216-132
Ferrule; Sleeve for 0.34 mm² / AWG 24; uninsulated; electro-tin plated

Item No.: 216-152
Ferrule; Sleeve for 0.34 mm² / AWG 24; uninsulated; electro-tin plated



Item No.: 216-241
Ferrule; Sleeve for 0.5 mm² / 20 AWG; insulated; electro-tin plated; electrolytic copper; gastight crimped; acc. to DIN 46228, Part 4/09.90; white



Item No.: 216-201
Ferrule; Sleeve for 0.5 mm² / 20 AWG; insulated; electro-tin plated; white



Item No.: 216-141
Ferrule; Sleeve for 0.5 mm² / 20 AWG; uninsulated; electro-tin plated; electrolytic copper; gastight crimped; acc. to DIN 46228, Part 1/08.92

Item No.: 216-101
Ferrule; Sleeve for 0.5 mm² / AWG 22; uninsulated; electro-tin plated; silver-colored

Item No.: 216-121
Ferrule; Sleeve for 0.5 mm² / AWG 22; uninsulated; electro-tin plated; silver-colored

Item No.: 216-242
Ferrule; Sleeve for 0.75 mm² / 18 AWG; insulated; electro-tin plated; electrolytic copper; gastight crimped; acc. to DIN 46228, Part 4/09.90; gray



Item No.: 216-202
Ferrule; Sleeve for 0.75 mm² / 18 AWG; insulated; electro-tin plated; gray



Item No.: 216-142
Ferrule; Sleeve for 0.75 mm² / 18 AWG; uninsulated; electro-tin plated; electrolytic copper; gastight crimped; acc. to DIN 46228, Part 1/08.92

Item No.: 216-102
Ferrule; Sleeve for 0.75 mm² / AWG 20; uninsulated; electro-tin plated; silver-colored

Item No.: 216-103
Ferrule; Sleeve for 1 mm² / AWG 18; uninsulated; electro-tin plated


Continued on next page

### 1.1.1.1 Ferrule



Item No.: 216-143
Ferrule; Sleeve for 1 mm² / AWG 18; uninsulated; electro-tin plated; electrolytic copper; gastight crimped; acc. to DIN 46228, Part 1/08.92



Item No.: 216-144
Ferrule; Sleeve for 1.5 mm² / AWG 16; uninsulated; electro-tin plated; electrolytic copper; gastight crimped; acc. to DIN 46228, Part 1/08.92; silver-colored

Item No.: 216-104
Ferrule; Sleeve for 1.5 mm² / AWG 16; uninsulated; electro-tin plated; silver-colored

## 1.1.2 Test and measurement

### 1.1.2.1 Testing accessories

Item No.: 859-500
WAGO Test pin; 1 mm Ø; 30 V AC / 60 V DC; CAT0; 1 A; 10 mm uninsulated; Test lead for soldering up to 0,5mm²

Item No.: 735-500
WAGO Test pin; 1 mm Ø; 30 V AC / 60 V DC; CAT0; 1 A; 6 mm uninsulated; Test lead for soldering up to 0,5mm²

## 1.1.3 Tool

### 1.1.3.1 Operating tool

Item No.: 210-719
Operating tool; Blade: 2.5 x 0.4 mm; with a partially insulated shaft

# Installation Notes

## Conductor termination

Inserting solid conductor via push-in termination.

## Conductor termination

Inserting and removing fine-stranded conductors via push-buttons.

 Continued on next page

## Conductor removal

Removing a conductor via push-button.

## Testing

Testing via 1 mm Ø test pin.
Touch contact with current bar

## Marking

Pole marking via direct marking perpendicular to conductor entry.