Ketho # KT 7530

Mounting instructions

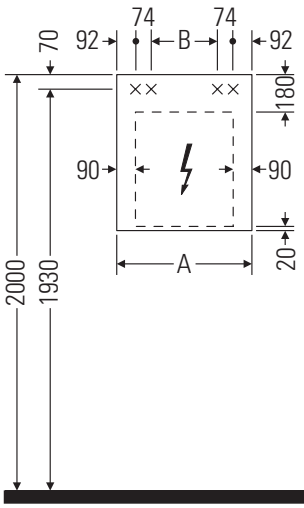

A mm	B mm
650	318

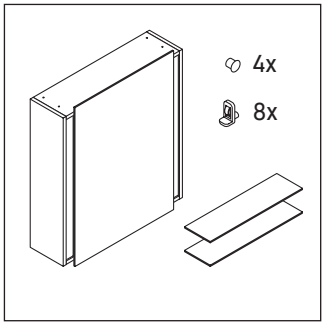

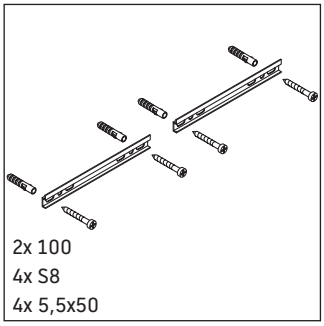

Instructions for use

The bathroom furniture range complies with the standards and guidelines applicable at the time of delivery and is designed for use in bathrooms.
Direct contact with water should be avoided, for example, when showering.
A power supply of 110 V – 230 V must be available on site.
Distance from the sensor to the reflecting surfaces = > 75 mm.
We reserve the right to make technical improvements and design modifications to the products illustrated.

DURAVIT

1

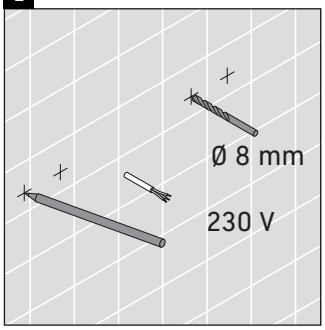

2

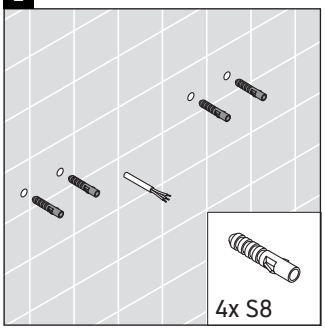

3

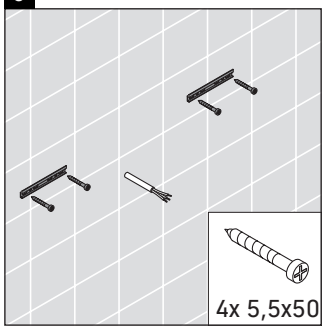

4

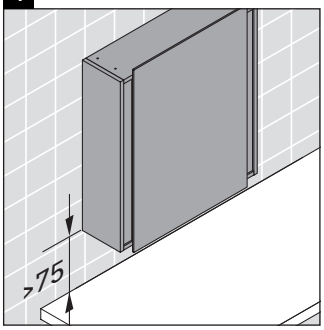

5

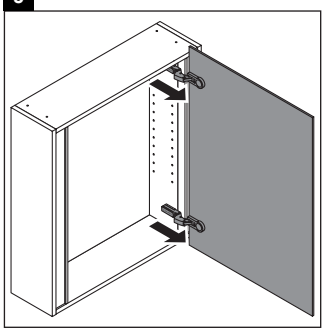

6

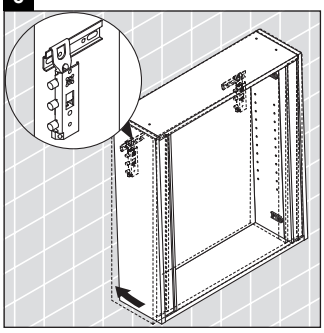

7

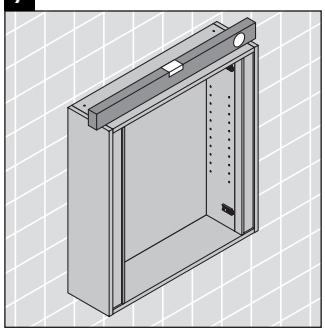

8

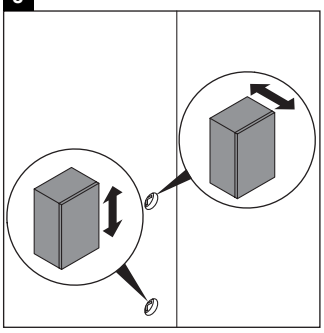

9

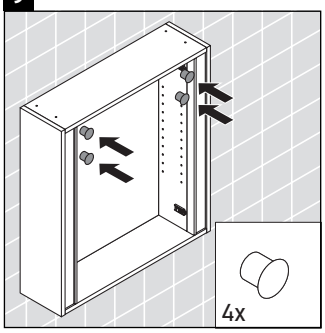

10

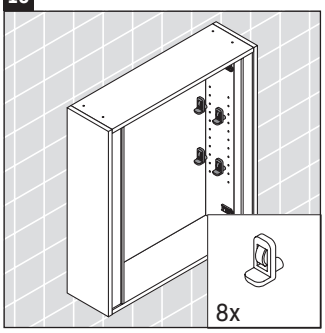

11

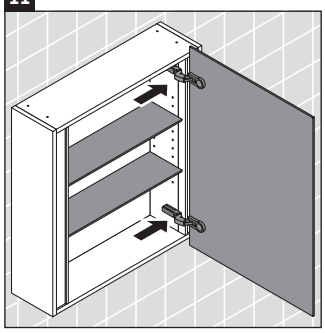

12

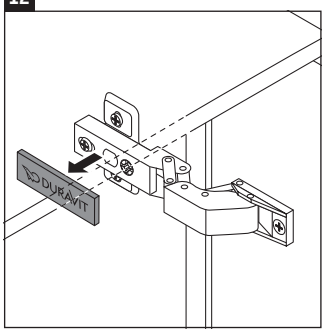

13

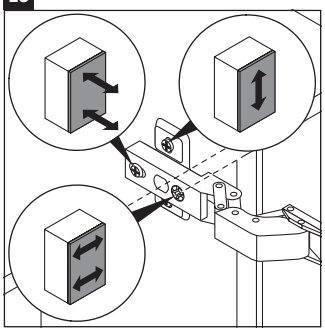

14

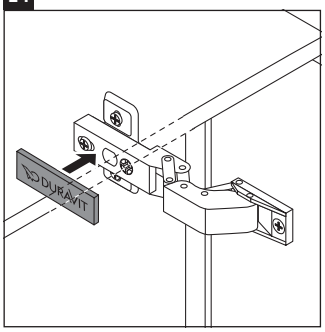

Order no. KT7530/19.11.3

Duravit AG, Werderstr. 36, 78132 Hornberg, Germany, Phone +49 78 33 700, Fax +49 78 33 70 289, info@duravit.de, www.duravit.de

Mounting instructions for bathroom furniture with a power supply

Safety 2

Electrical installation 3

Safety

Intended use

The mounting instructions come as part of the Duravit product and are aimed at people who carry out the electrical installation for the product. You must read through the mounting instructions carefully and they must be available at all times.

Target readership and qualifications

The electrical installation may only be carried out by qualified electricians.

Protection rating of Duravit products

The protection rating of Duravit products with a power supply complies with the IP 44 standard as a minimum.

Protection class of wall lights

Protection class	Connecting cable
I	H05VV-F, 3x 1.5 mm²
II	H03VV-F, 2x 0.75 mm²

Standards and directives

Duravit products comply with the CE marking directives:

Icons and symbols

Symbol	Meaning
>	Action required

Disposal

- Do not dispose of the product in household waste. Products with this symbol must be disposed of in accordance with the WEEE Directive through local collection points for waste electrical equipment.

Safety instructions

Danger to life

Contact with electricity may lead to an electric shock.

> Carry out the electrical installation in accordance with the national, European and international directives and standards.
> Observe protection zones for wet rooms in accordance with country-specific standards, local regulations and low voltage guidelines.
> Connect the electrics using a ground fault circuit interrupter (GFCI) in wet rooms or other specially equipped rooms.
> Disconnect electrical components from the power supply before the installation.
> Check that all components are de-energised.
> Prevent the power supply from being switched on accidentally.

Penetration of foreign bodies and water

Foreign bodies or water in equipment lead to a short circuit that may cause damage to the product.

> Observe the protection zones for Duravit products.

Protection zones

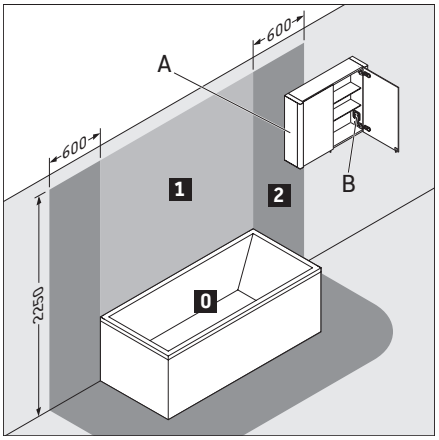

A A mirror cabinet with an IP 44 rating may protrude into zone 2.

B A socket in a mirror cabinet must be mounted outside the zones.

Energy efficiency class

- This product contains an energy efficiency class F light source.

Electrical installation

Electrical installation for protection class I

Electrical connection

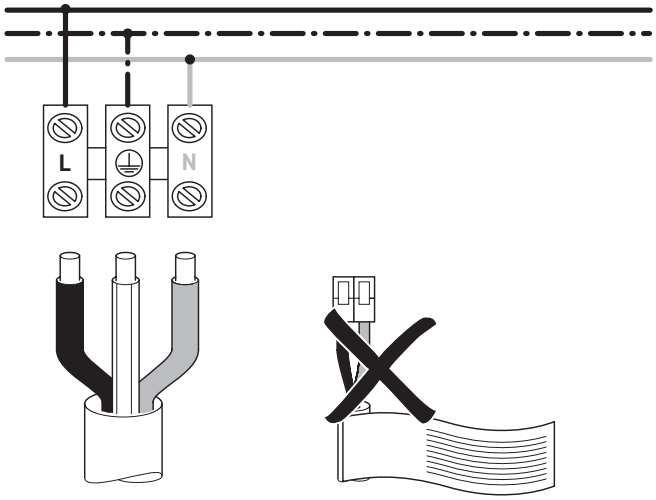

Optional connection of an external button

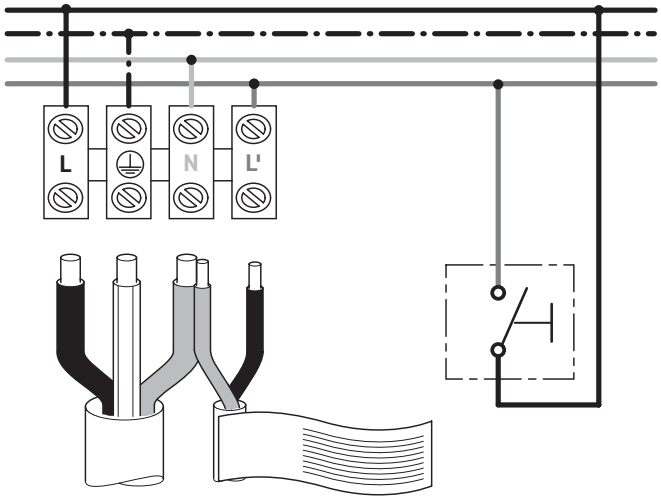

Electrical installation for protection class II

Electrical connection

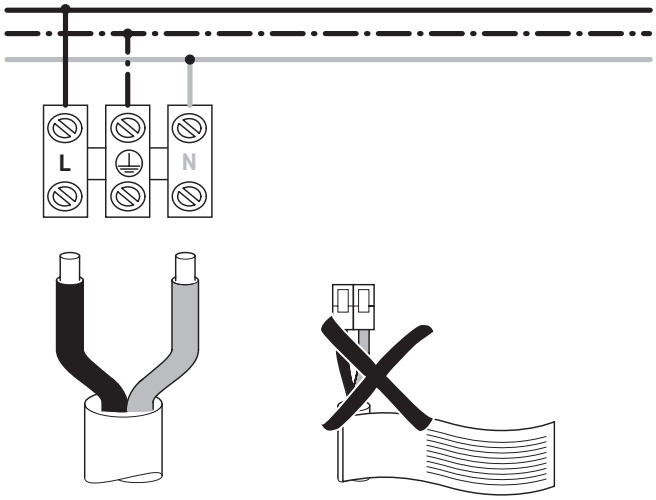

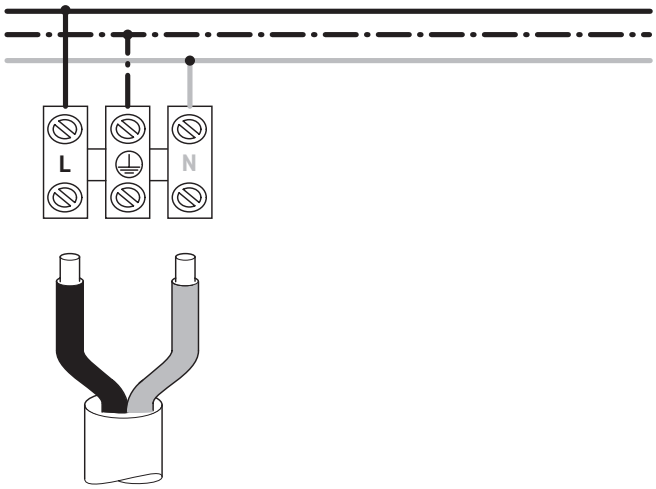

Optional connection of an external button

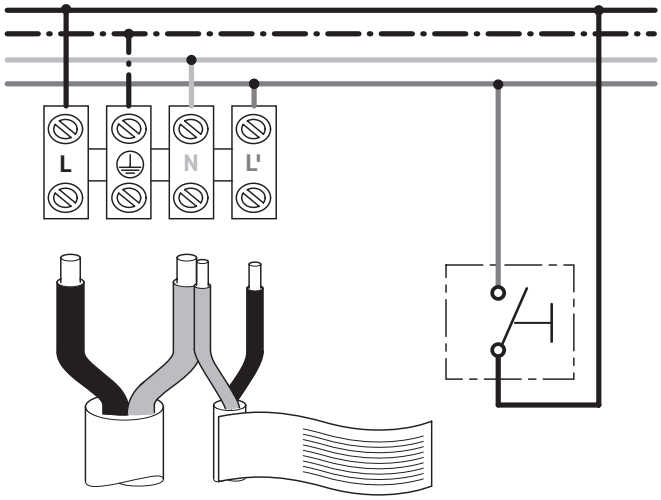

DURAVIT AG
P.O. Box 240
Werderstr. 36
78132 Hornberg
Germany
Phone +49 7833 70 0
Fax +49 7833 70 289
info@duravit.com
www.duravit.com

DURAVIT

Order no. 51240/22.04.8 We reserve the right to make technical improvments and design modifications to the products illustrated.

DURAVIT

LED-Dimmfunktion
LED-Dimming function
Variateur déclairage LED
LED dimfunctie
Funzione dimmer per LED
Funcion regulacion de intensidad del LED
Função de regulação da intensidade da luz LED
LED-dæmpefunktion
LED-himmennystoiminto
LED-dimmefunksjon
LED-dimmfunktion
LEDi dimmerifunktsioon
Funkcja ściemniania diod LED
Функция диммирования светодиодов
Funkce stmívání LED
Funkcia stlmenia LED diód
LED fényerősség szabályzó funkció
LED funkcija zatamnjenja
Funcție de reglare LED
Zatemnitvena funkcija LED
LED функция за затъмняване
LED gaismas intensitātes regulēšanas funkcija
LED ryškumo reguliavimo funkcija
LED aydınlatma fonksiyonu
LED 调光功能
LED 밝기 조절 기능
LED 弱光機能
وظيفة التعتيم LED

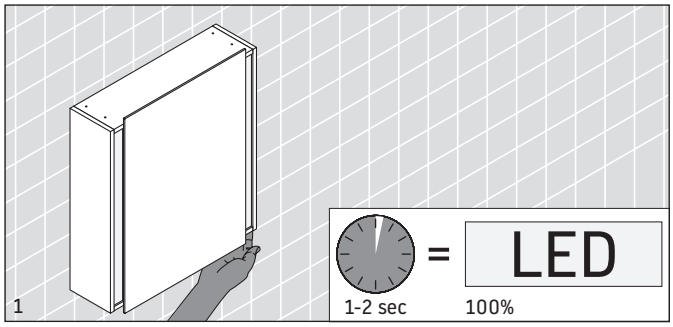

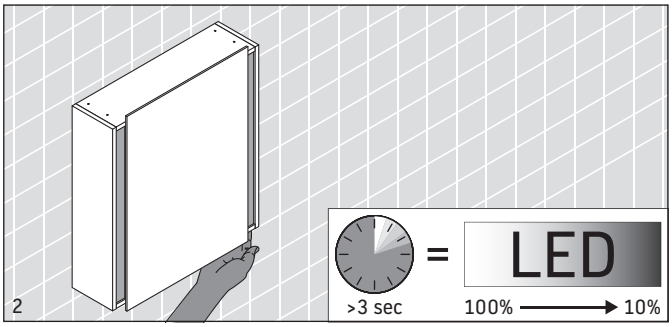

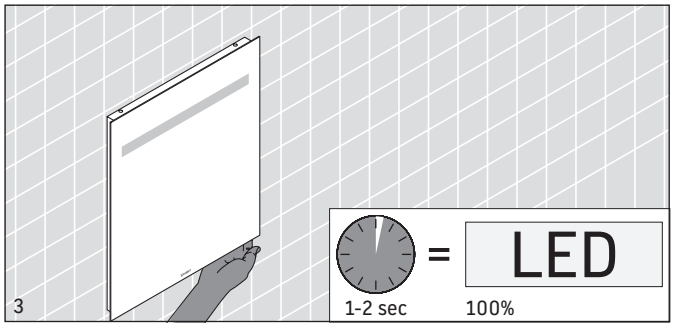

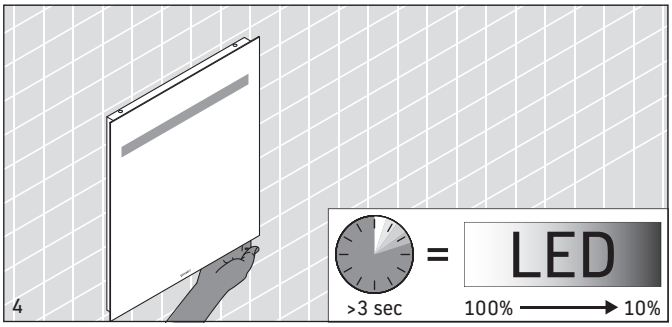

Technische Verbesserungen und optische Veränderungen an den abgebildeten Produkten behalten wir uns vor.
We reserve the right to make technical improvements and enhance the appearance of the products shown.
Nous nous réservons le droit d'apporter des améliorations techniques et de modifier l'apparence visuelle des produits présentés.
Technische verbeteringen en optische wijzigingen ten opzichte van de afgebeelde producten voorbehouden.
Con riserva di apportare modifiche tecniche.
Nos reservamos el derecho de realizar modificaciones técnicas y de aspecto de los productos representados.
Reservamo-nos o direito a melhoramentos técnicos e a alterações ao nível visual dos produtos ilustrados.
Vi forbeholder os ret til tekniske forbedringer og ændringer af de viste produkter.
Pidätämme oikeuden kuvattujen tuotteiden teknisiin ja ulkonäköä koskeviin muutoksiin.
Vi forebeholder oss retten til tekniske forbedringer og optiske endringer av de avbildede produktene.
Vi förbehåller oss rätten till tekniska förbättringar och optiska ändringar hos de avbildade produkterna.
Me jätame endale esitatud toodetel tehniliste täiustuste ja optiliste muudatuste tegemise õiguse.
Zmiany techniczne i optyczne prezentowanych produktów zastrzeżone.
Мы оставляем за собой право на техническое усовершенствование и визуальные изменения изображенных изделий.
Vyhrazujeme si technická zlepšení a optické změny zobrazených výrobků.
Vyhradzujeme si právo na technické vylepšenia a vizuálne zmeny vyobrazených produktov.
Az ábrákon szereplő termékek műszaki fejlesztésének és a külső megjelenés változtatásának jogát fenntartjuk magunknak.
Zadržavamo pravo na tehnička poboljšanja i optičke promjene na prikazanim proizvodima.
Ne rezervăm dreptul la efectuarea îmbunătățirilor tehnice și a modificărilor optice la produsele din poze.
Pridržujemo si pravico do tehničnih izboljšav in optičnih sprememb na prikazanih proizvodih.
Запазваме си правото за технически подобрения и оптични промени на изобразените изделия.
Saglabājam tiesības veikt tehnisku pilnveidošanu un mainīt attēlos redzamo izstrādājumu vizuālo noformējumu.
Pasiliekame teisę daryti techninius patobulinimus ir keisti pavaizduotų gaminių išvaizdą.
Resimlerde gösterilen ürünlerde teknik iyileştirme ve görünüm değişiklikleri yapma hakkımız saklıdır.
我们保留图示产品的技术改进和外观修改的权力。
사진에 제시된 제품에 기술적인 개선 및 디자인 변경이 있을 수 있습니다.
説明した製品に予告なく技術的あるいはデザイン的な変更を行うことがありますので、ご了承ください。
نحتفظ بالحق في إجراء تحسينات تقنية وتعديلات بصرية على المنتجات المصورة.

DURAVIT AG
P.O. Box 240
Werderstr. 36
78132 Hornberg
Germany
Phone +49 7833 70 0
Fax +49 7833 70 289
info@duravit.com
www.duravit.com

Order no. 56816/19.02.4