Electromechanical Audible Signal Devices / Installation Buzzers 382

Buzzer EM Contin. tone 230VAC SR

Part No.:	382.013.68

MECHANICAL DATA	
Height	37 mm
Diameter	55 mm
Materials	Steel
Housing colour	Silver
Protection category	IP20
Connection	Stranded wires (tinned)
Type of fixing	Built-in mounting
Acoustic service life	300 h minimum
Working temperature minimum	-20°C
Working temperature maximum	+60°C
Weight with packaging	100 g
Product weight	100 g

ELECTRICAL DATA	
Operating voltage	230V
Operating voltage type	AC
Operating voltage frequency	50Hz
Operating voltage tolerance	+/- 10%
Rated operational voltage	230 VAC
Rated operational current	15 mA
Rated inrush current	<500mA
Pollution degree	2

ACUSTICAL DATA	
Volume/dB(max) at 1m distance	90,0 dB (A)
Acoustic signal image	Continuous tone
Audio frequency	100 Hz

! For additional installation and mounting information, refer to the appropriate user guide at www.werma.com. This printed copy is for information only and is subject to alteration.

Electromechanical Audible Signal Devices / Installation Buzzers 382

Buzzer EM Contin. tone 230VAC SR

DRAWING

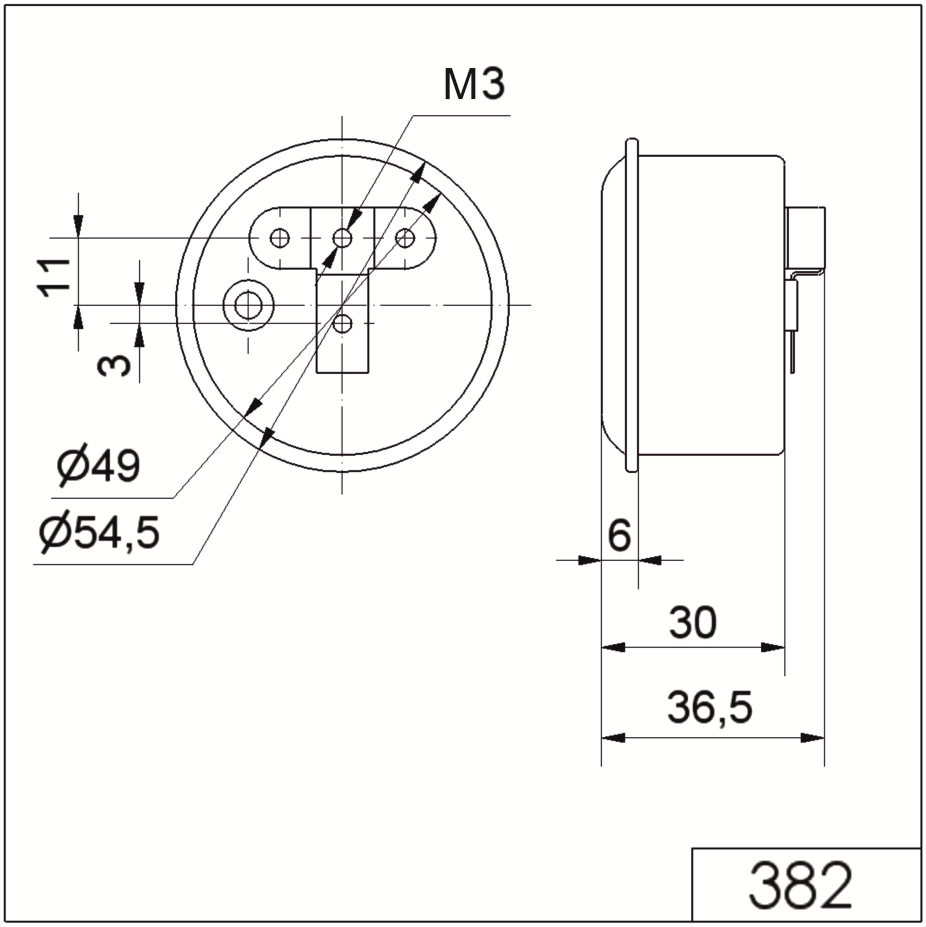

! For additional installation and mounting information, refer to the appropriate user guide at www.werma.com. This printed copy is for information only and is subject to alteration.