PANEL PFM HO 600 C-BOX

PANEL PFM HO 600 DALI C-BOX

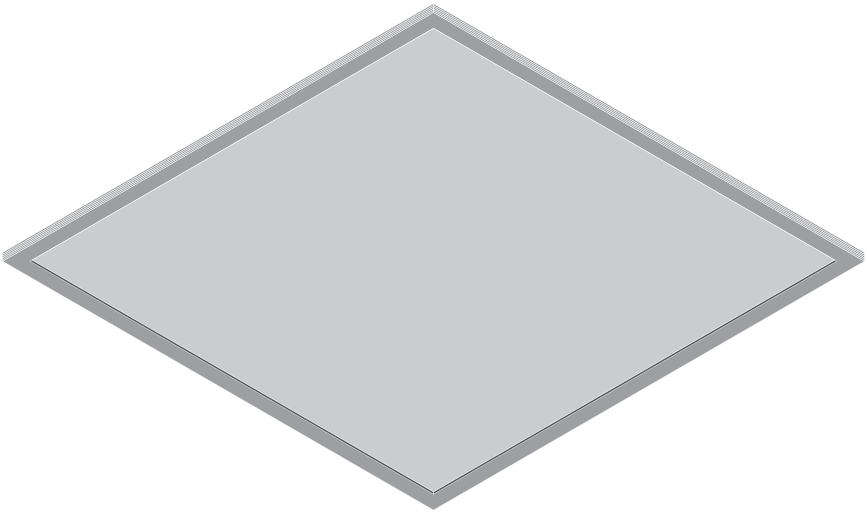

	EAN	l x w x h [mm]	W	lm	lm/W	K	IP	IK
PL PFM HO 600 36W/3000K CB	4058075400498	595 x 595 x 12.2	36	4320	120	3000	20	03
PL PFM HO 600 36W/4000K CB	4058075400535	595 x 595 x 12.2	36	4320	120	4000	20	03
PL PFM HO 600 36W/3000K CB UGR19	4058075400573	595 x 595 x 12.2	36	4320	120	3000	20	03
PL PFM HO 600 36W/4000K CB UGR19	4058075400597	595 x 595 x 12.2	36	4320	120	4000	20	03
PL PFM HO 600 DALI 36W/3000K CB	4058075400610	595 x 595 x 12.2	36	4320	120	3000	20	03
PL PFM HO 600 DALI 36W/4000K CB	4058075400634	595 x 595 x 12.2	36	4320	120	4000	20	03
PL PFM HO 600 DALI 36W/3000K CB UGR	4058075400658	595 x 595 x 12.2	36	4320	120	3000	20	03
PL PFM HO 600 DALI 36W/4000K CB UGR	4058075400672	595 x 595 x 12.2	36	4320	120	4000	20	03

	EAN	(°C)	V_{AC}	Hz		PF	R_a	
PL PFM HO 600 36W/3000K CB	4058075400498	-20…+40	220-240 V	50/60 Hz	120°	> 0.9	≥80	2.8 kg
PL PFM HO 600 36W/4000K CB	4058075400535	-20…+40	220-240 V	50/60 Hz	120°	> 0.9	≥80	2.8 kg
PL PFM HO 600 36W/3000K CB UGR19	4058075400573	-20…+40	220-240 V	50/60 Hz	90°	> 0.9	≥80	2.8 kg
PL PFM HO 600 36W/4000K CB UGR19	4058075400597	-20…+40	220-240 V	50/60 Hz	90°	> 0.9	≥80	2.8 kg
PL PFM HO 600 DALI 36W/3000K CB	4058075400610	-20…+40	220-240 V	50/60 Hz	120°	> 0.9	≥80	2.8 kg
PL PFM HO 600 DALI 36W/4000K CB	4058075400634	-20…+40	220-240 V	50/60 Hz	120°	> 0.9	≥80	2.8 kg
PL PFM HO 600 DALI 36W/3000K CB UGR	4058075400658	-20…+40	220-240 V	50/60 Hz	90°	> 0.9	≥80	2.8 kg
PL PFM HO 600 DALI 36W/4000K CB UGR	4058075400672	-20…+40	220-240 V	50/60 Hz	90°	> 0.9	≥80	2.8 kg

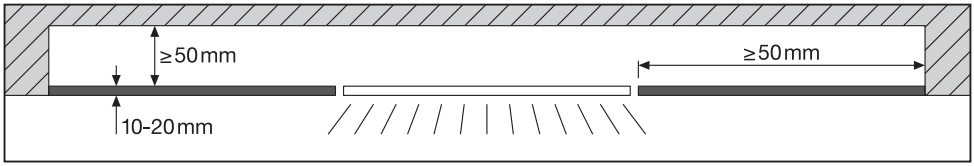
≥50mm
≥50mm
10-20mm

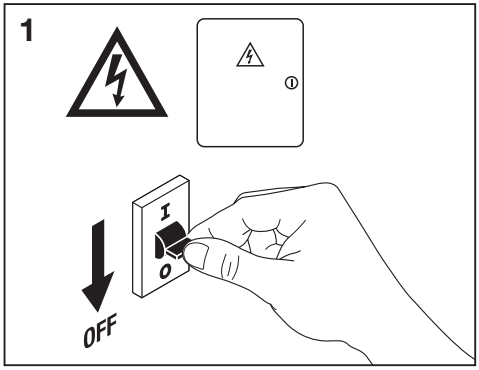
1
I
O
OFF

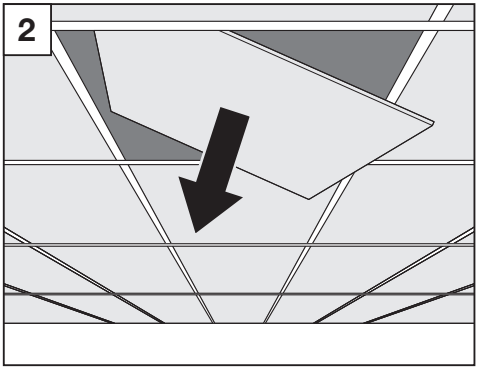
2

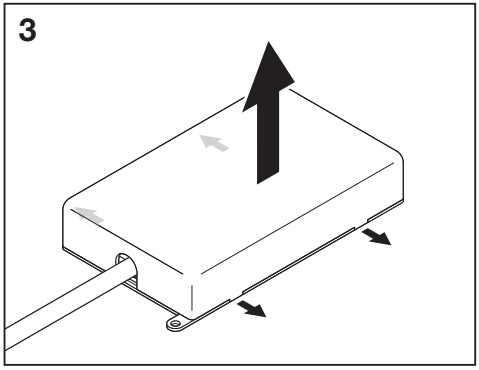
3

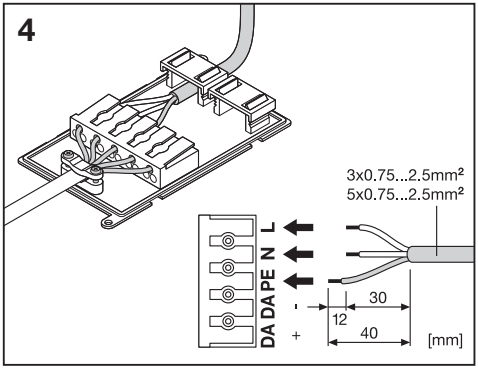
4
3x0.75...2.5mm²
5x0.75...2.5mm²
L
N
PE
DA
DA
-
+
30
12
40
[mm]

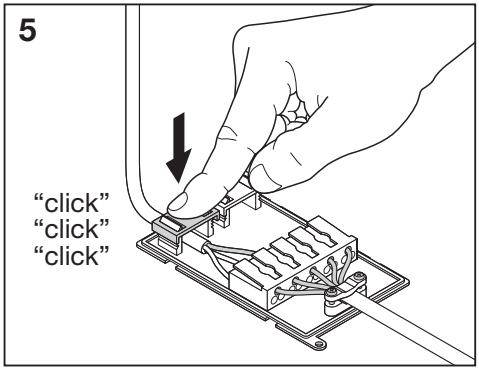
5
“click”
“click”
“click”

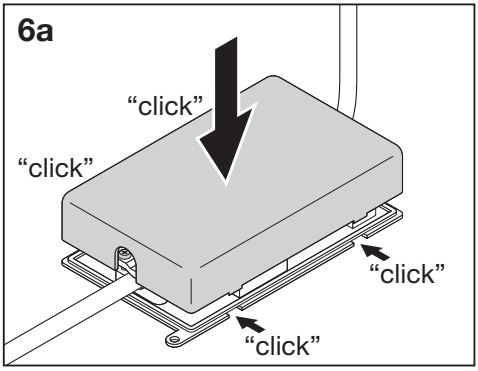
6a
“click”
“click”
“click”
“click”

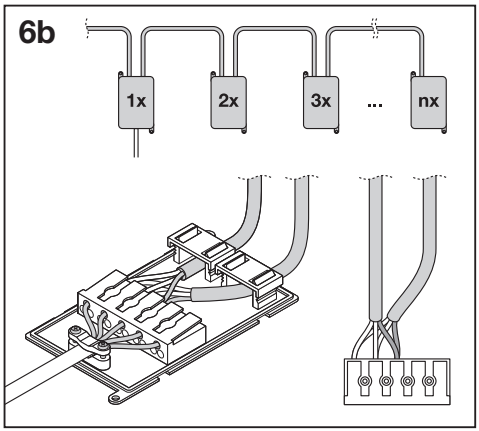
6b
1x
2x
3x
...
nx

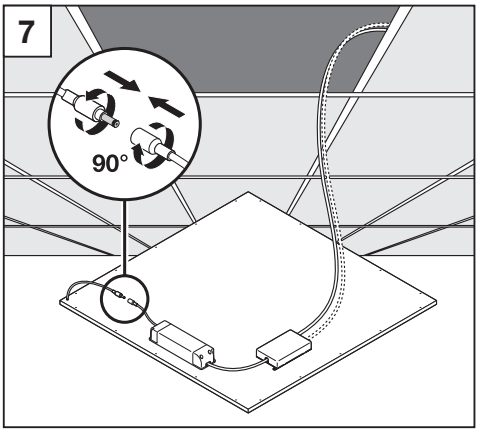
7
90°

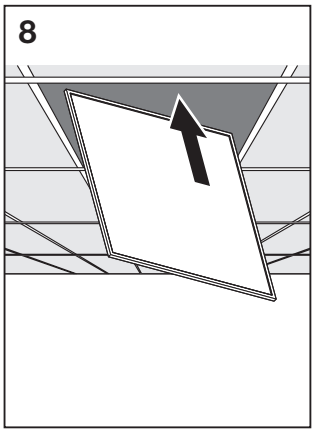
8

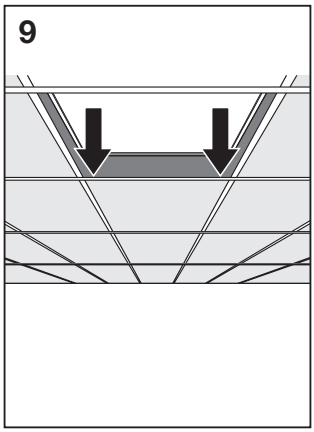
9

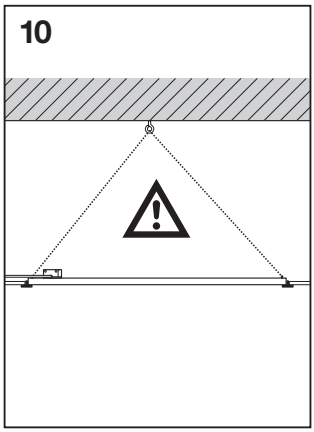
10

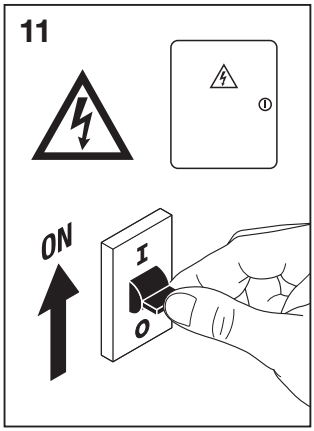
11
ON
I
O

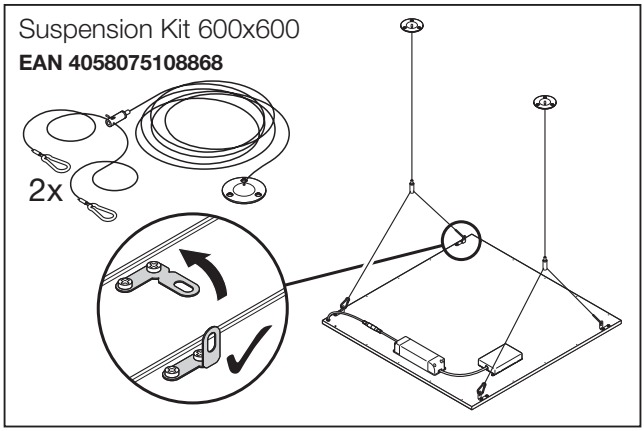
Suspension Kit 600x600
EAN 4058075108868
2x

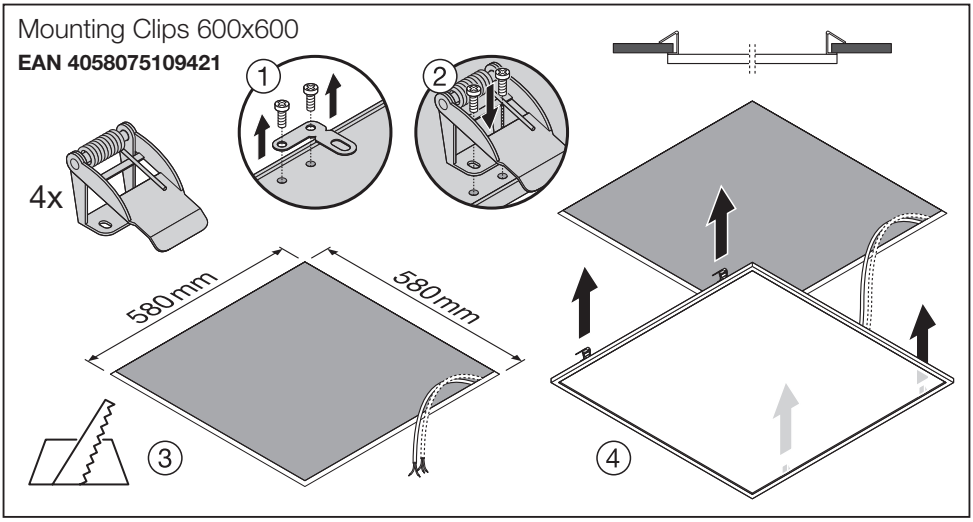

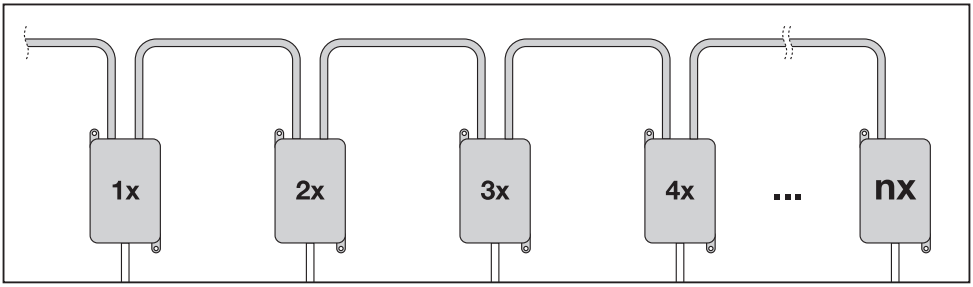

	C10A	B16A	C16A	DALI	I_{OUT} [mA]	R_{LEDset} [Ω]	DIM
PANEL PFM HO 600 DALI C-BOX	**n**=23	**n**=23	**n**=38	LCA 45W 500-1400mA one4all SC PRE	1200@ 5V	4.3k (Tridonic I-Select 2 PLUG 1200MA BL 28001128)	
PANEL PFM HO 600 C-BOX	**n**=35	**n**=17	**n**=56	–	–	–	

RoHS

C10449057
G11084372
04.11.19

LEDVANCE GmbH
Steinerne Furt 62
86167 Augsburg, Germany
www.ledvance.com