PRODUCT DATASHEET
TRACK SP D75 25 W 3000 K 90RA NFL GY

TRACKLIGHT SPOT D75 25W | 3-phase tracklight spot with integrated control gear, low wattage

GERMAN DESIGN AWARD NOMINEE 2019



PERFOR-MANCE CLASS

Areas of application

- Direct replacement for luminaires using HID lamps
- Accent lighting
- Fashion shops, accessories shops
- Retail
- Hotels, restaurants, shops

Product benefits

- Included 3-phase adapter compatible with common tracks (GLOBAL, EUTRAC, POWERGEAR, STAFF, NORLUX, NUCO, NORDIC)
- Deep reflector and black antiglare ring for minimized glare (UGR < 16)
- Reflector easily replaceable thanks to bayonet catch and rubber suction pad
- No distraction of attention from the illuminated objects thanks to reduced design
- Low flicker light thanks to special electronic control gear
- 5 years guarantee

Product features

- Compact tracklight spot with integrated control gear
- Rotation angle: 350°, tilt angle: 90°
- Luminaire efficacy: up to 80 lm/W
- Available with color temperature 3000 K or 4000 K

© 2024, LEDVANCE GmbH. All rights reserved.

- Very good color rendering index R_a: > 90
- Color rendering index R_a9: > 50
- Initial color consistency: ≤ 3 SDCM
- Equipped with reflectors with 24° beam angle
- Follows the unified LEDVANCE design language (SCALE design)
- Robust die-cast aluminum housing
- Available in matt white (like RAL9016), matt black (like RAL9004) and concrete grey (like RAL7042)

© 2024, LEDVANCE GmbH. All rights reserved.

TECHNICAL DATA

Electrical data

Nominal wattage	25.00 W
Nominal voltage	220…240 V
Mains frequency	50…60 Hz
Nominal current	110 mA
Inrush current	23 A
Inrush current time T_{h50}	< 3.4 µs
Max. number of luminaires per miniature circuit breaker B16	30
Max. number of luminaires per miniature circuit breaker C10	24
Max. number of luminaires per miniature circuit breaker C16	38
Power factor λ	≥0.90
Total harmonic distortion	< 15 %
Protection class	I
Operating mode	Integrated LED driver

Photometrical data

Luminous flux	1750 lm
Luminous efficacy	70 lm/W
Color temperature	3000 K
Light color (designation)	Warm White
Color rendering index Ra	90
Standard deviation of color matching	≤3 sdcm
Luminous intensity	-
Low flicker	Yes
Flickering metric (Pst LM)	-
Stroboscope effect metric (SVM)	-
Photobiological safety group acc. to EN62778	RG1
Beam angle	24 °

© 2024, LEDVANCE GmbH. All rights reserved.

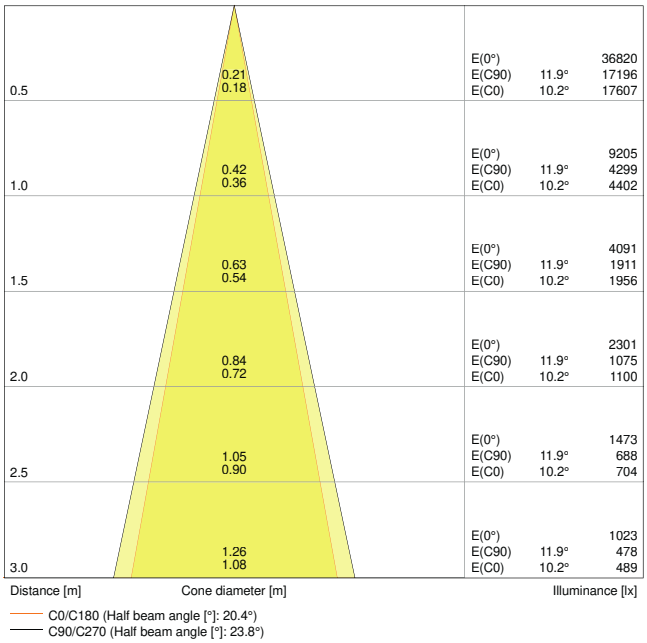

LDC typ cone

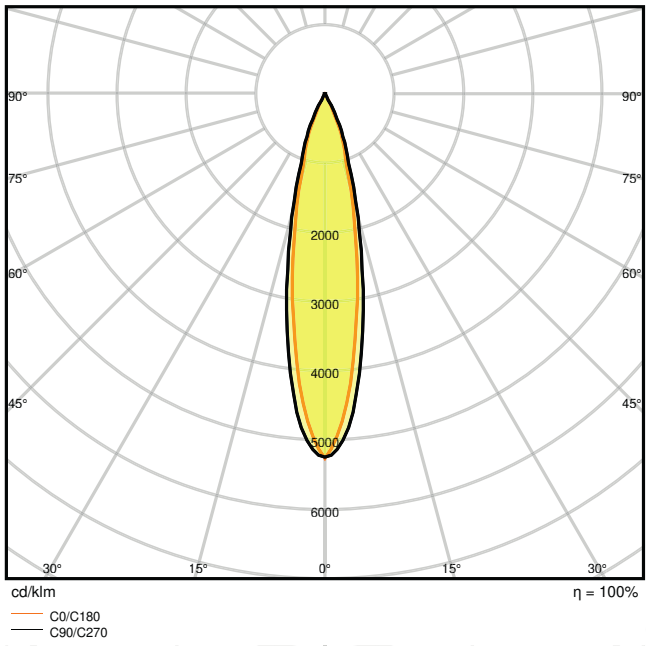

LDC typ polar

Dimensions & Weight

Diameter	75.00 mm
Height	255.00 mm
Product weight	770.00 g

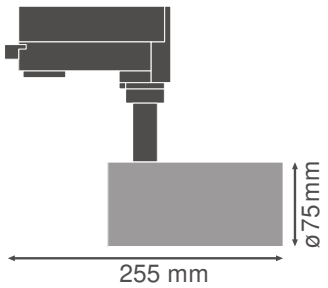

Materials & Colors

Product color	Gray

© 2024, LEDVANCE GmbH. All rights reserved.

Housing color	Gray
Body material	Aluminum
Cover material	Polymethylmethacrylate (PMMA)
Light emitting surface material	Polycarbonate (PC)
Glow Wire Test according to IEC 60695-2-12	650 °C
Mercury content	0.0 mg

Application & Mounting

Ambient temperature range	-20…+40 °C
Type of connection	Adapter, 3-phase
Type of protection	IP20
Protection class IK (shock resistance)	IK02
Dimmable	No
Mounting type	Surface
Mounting location	Mounting track
Application environment	Indoor
Adjustable	Yes
LED module replaceable	Not replaceable

Lifespan

Lifespan L70/B50 at 25 °C	50000 h [1)]
Lifespan L80/B10 at 25 °C	45000 h [1)]
Lifespan L90/B10 at 25 °C	30000 h
Number of switching cycles	50000

1) t[h]: L70 / B50 @ 25 °C (Ta), t[h]: L80 / B10 @ 25 °C (Ta), t[h]: L90 / B10 @ 25 °C (Ta)

Control gear

Output current	600 mA
ECG - Output ripple current	< 10 %

Certificates & Standards

Standards	CE / CB / ENEC / TÜV SÜD / EAC / RoHS
Luminaire with limited surface temperature, "D sign"	No
Ball shot safe	No

EQUIPMENT / ACCESSORIES

© 2024, LEDVANCE GmbH. All rights reserved.

– Accessory reflectors with 15° or 38° beam angle available

DOWNLOAD DATA

	Documents and certificates
PDF	User instruction
PDF	Addon Technical Information
PDF	On-Pack-Info
PDF	Packaging insert
PDF	Declarations Of Conformity CE
PDF	Declarations Of Conformity UKCA

	Photometric and lighting design files
IES	IES file (IES)
LDT	LDT file (Eulumdat)
ULD	ULD file (DIALux)
ROLF	ROLF file (RELUX)
	UGR file (UGR table)
	LDC typ cone
	LDC typ polar

	CAD/BIM files
RVT	BIM_Revit_3D
STEP	CAD_STEP_3D

© 2024, LEDVANCE GmbH. All rights reserved.

LOGISTICAL DATA

Product code	Packaging unit (Pieces/Unit)	Dimensions (length x width x height)	Gross weight	Volume
4058075113688	Folding box 1	90 mm x 100 mm x 285 mm	830.00 g	2.57 dm^3
4058075113695	Shipping box 4	375 mm x 110 mm x 295 mm	3557.00 g	12.17 dm^3

The mentioned product code describes the smallest quantity unit which can be ordered. One shipping unit can contain one or more single products. When placing an order, for the quantity please enter single or multiples of a shipping unit.

ADDITIONAL CATALOG INFORMATION

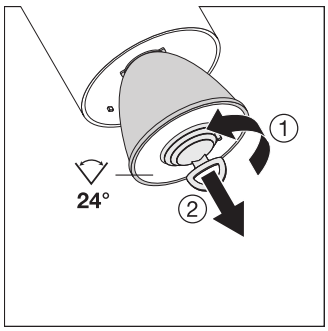

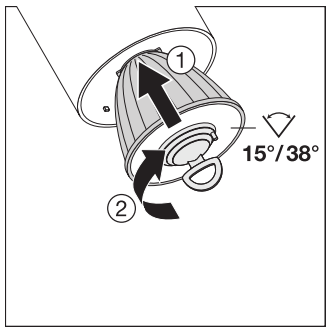

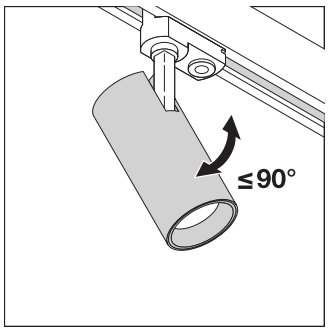

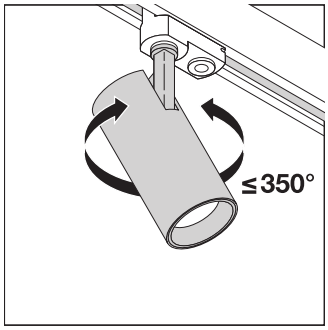

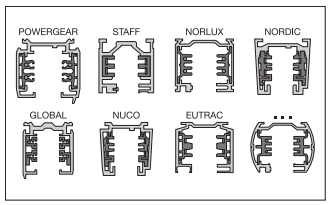

References / Links

– For Guarantee see www.ledvance.com/guarantee

DISCLAIMER

Subject to change without notice. Errors and omission excepted. Always make sure to use the most recent release.

© 2024, LEDVANCE GmbH. All rights reserved.