SURFACE CIRCULAR

SURFACE CIRCULAR SENSOR

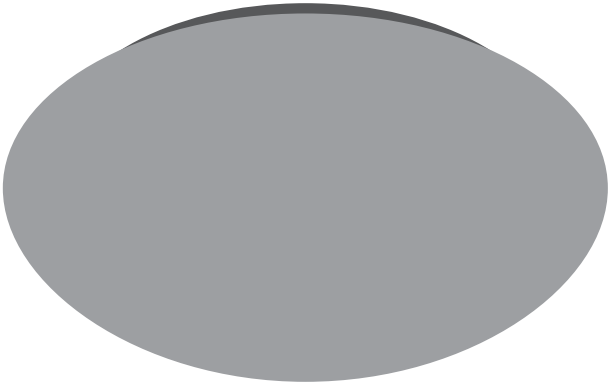

	EAN	Ø x h [mm]	W	lm	lm/W	K	IP	IK
SF CIRCULAR 250 13W/3000K	4058075110120	250 x 91	13	920	70	3000	44	03
SF CIRCULAR 250 13W/4000K	4058075110144	250 x 91	13	960	75	4000	44	03
SF CIRCULAR 250 13W/3000K S	4058075314894	250 x 91	13	920	70	3000	44	03
SF CIRCULAR 250 13W/4000K S	4058075314917	250 x 91	13	960	75	4000	44	03
SF CIRCULAR 350 18W/3000K	4058075080010	350 x 115	18	1440	80	3000	44	03
SF CIRCULAR 350 18W/4000K	4058075080034	350 x 115	18	1440	80	4000	44	03
SF CIRCULAR 350 18W/3000K S	4058075314931	350 x 115	18	1440	80	3000	44	03
SF CIRCULAR 350 18W/4000K S	4058075314955	350 x 115	18	1440	80	4000	44	03
SF CIRCULAR 400 24W/3000K	4058075080058	400 x 120	24	1920	80	3000	44	03
SF CIRCULAR 400 24W/4000K	4058075080072	400 x 120	24	1920	80	4000	44	03
SF CIRCULAR 400 24W/3000K S	4058075314979	400 x 120	24	1920	80	3000	44	03
SF CIRCULAR 400 24W/4000K S	4058075314993	400 x 120	24	1920	80	4000	44	03

	EAN	(°C)	V_{AC}	Hz		PF	R_a	
SF CIRCULAR 250 13W/3000K	4058075110120	-20...+40	220-240 V	50/60 Hz	120°	> 0.5	> 80	0.3 kg
SF CIRCULAR 250 13W/4000K	4058075110144	-20...+40	220-240 V	50/60 Hz	120°	> 0.5	> 80	0.3 kg
SF CIRCULAR 250 13W/3000K S	4058075314894	-20...+40	220-240 V	50/60 Hz	120°	> 0.5	> 80	0.3 kg
SF CIRCULAR 250 13W/4000K S	4058075314917	-20...+40	220-240 V	50/60 Hz	120°	> 0.5	> 80	0.3 kg
SF CIRCULAR 350 18W/3000K	4058075080010	-20...+40	220-240 V	50/60 Hz	120°	> 0.5	> 80	0.6 kg
SF CIRCULAR 350 18W/4000K	4058075080034	-20...+40	220-240 V	50/60 Hz	120°	> 0.5	> 80	0.6 kg
SF CIRCULAR 350 18W/3000K S	4058075314931	-20...+40	220-240 V	50/60 Hz	120°	> 0.5	> 80	0.7 kg
SF CIRCULAR 350 18W/4000K S	4058075314955	-20...+40	220-240 V	50/60 Hz	120°	> 0.5	> 80	0.7 kg
SF CIRCULAR 400 24W/3000K	4058075080058	-20...+40	220-240 V	50/60 Hz	120°	> 0.5	> 80	0.7 kg
SF CIRCULAR 400 24W/4000K	4058075080072	-20...+40	220-240 V	50/60 Hz	120°	> 0.5	> 80	0.7 kg
SF CIRCULAR 400 24W/3000K S	4058075314979	-20...+40	220-240 V	50/60 Hz	120°	> 0.5	> 80	0.8 kg
SF CIRCULAR 400 24W/4000K S	4058075314993	-20...+40	220-240 V	50/60 Hz	120°	> 0.5	> 80	0.8 kg

LEDVANCE

1

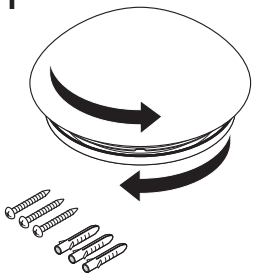

2

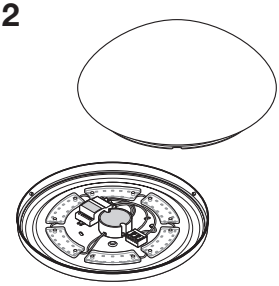

3

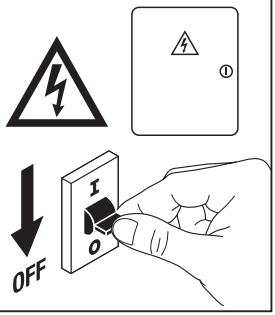

IP44

4

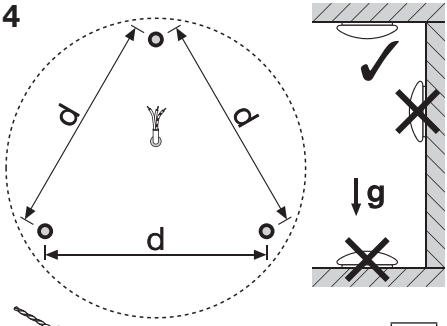

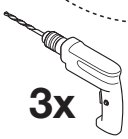

3x

[mm]	d
SURFACE CIRCULAR 250	157
SURFACE CIRCULAR 350	223
SURFACE CIRCULAR 400	266

5

3x

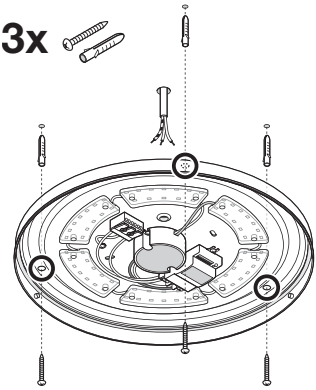

IP20

4

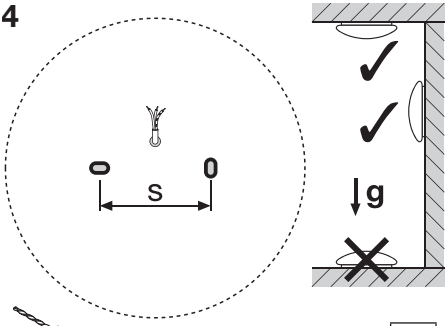

2x

[mm]	s
SURFACE CIRCULAR 250	110
SURFACE CIRCULAR 350	95
SURFACE CIRCULAR 400	130

5

2x

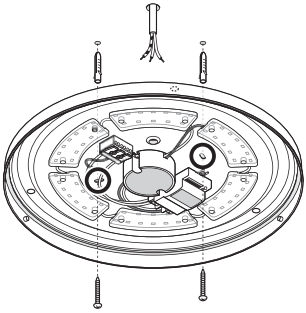

6

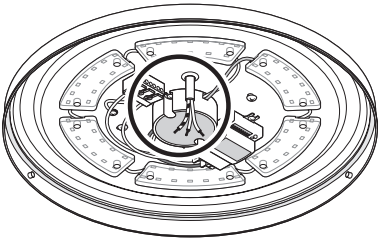

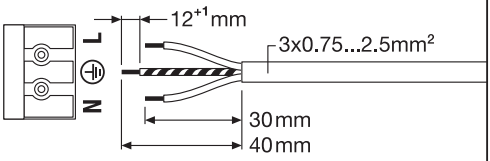

7: SURFACE CIRCULAR SENSOR

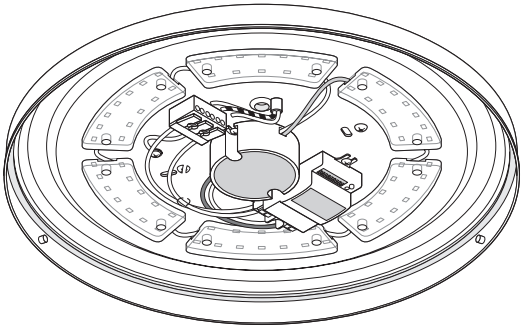

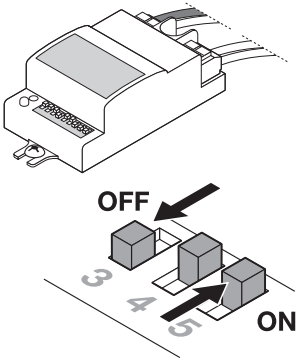

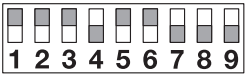

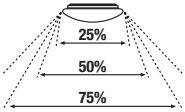

Detection Area

1	2	3	
ON	ON	ON	100 %
–	ON	ON	75 %
ON	–	ON	50 %
–	–	ON	25 %
–	–	ON	10 %

Hold Time

4	5	6	
ON	ON	ON	5 s
–	ON	ON	30 s
ON	–	ON	90 s
–	–	ON	3 min
ON	ON	–	20 min
–	–	–	30 min

Daylight Sensor

7	8	9	
ON	ON	ON	2 LUX
ON	ON	–	10 LUX
–	ON	–	25 LUX
ON	–	–	50 LUX
–	–	–	Disable

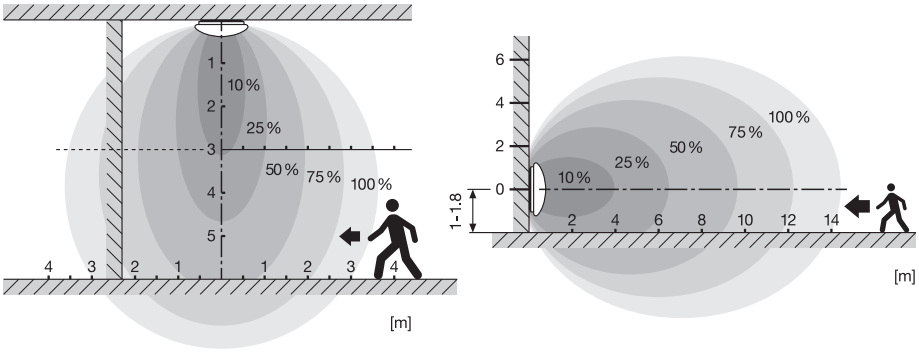

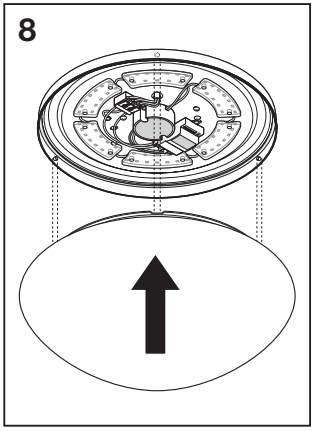

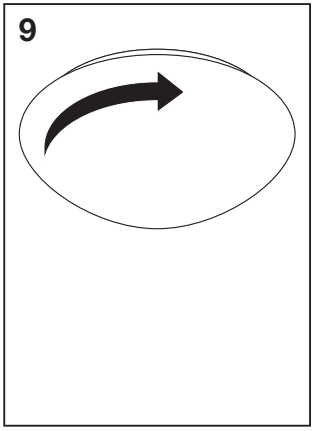

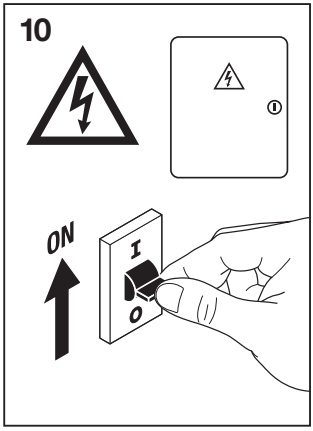

	EAN	Ø x h [mm]
SF CIRCULAR 250 COVER	4058075156722	250 x 80
SF CIRCULAR 350 COVER	4058075156807	350 x 104
SF CIRCULAR 400 COVER	4058075156821	400 x 112

RoHS

C10449057
G11072557
12.04.19

LEDVANCE GmbH
Steinerne Furt 62
86167 Augsburg, Germany
www.ledvance.com