PRODUCT DATASHEET
1906 BUBBLE TABLE 250x245 Glass Pink

Vintage 1906® Bubble | Indoor glass luminaires, vintage style, E27 socket, round shaped lamp shade

Areas of application

- Living areas (living rooms, dining rooms, bedrooms etc.)
- Bars, restaurants

Product benefits

- Adjustable appearance thanks to use of seperate available E27 lamp shapes
- Easy and quick installation

Product features

- Glass luminiares with a round shaped lamp shade
- Special vintage appearance when combined with 1906 LED or halogen lamps
- Luminaire family for various application areas
- Available in various colors

© 2022, LEDVANCE GmbH. All rights reserved.

TECHNICAL DATA

Electrical data

Nominal voltage	220...240 V
Mains frequency	50...60 Hz
Protection class	II
Operating mode	Mains voltage

Dimensions & Weight

Diameter	250.00 mm
Height	245.00 mm
Product weight	800.00 g
Cable length	1550 mm

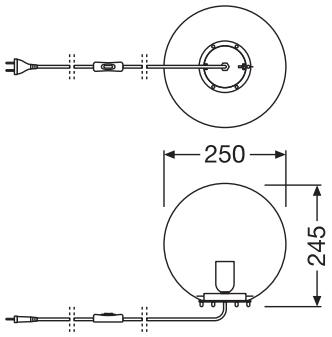

Materials & Colors

Product color	Pink
Housing color	Pink
Body material	Glass
Cover material	Glass
Mercury content	0.0 mg

Application & Mounting

Ambient temperature range	-20...+40 °C
Temperature range at storage	-25...+70 °C
Type of connection	Plug type C (EU)
Type of protection	IP20

© 2022, LEDVANCE GmbH. All rights reserved.

Dimmable	No
Mounting type	Standing
Mounting location	Table
Application environment	Indoor
With light source	No
Holder designation	E27

Certificates & Standards

Standards	CE / EAC / REACH

EQUIPMENT / ACCESSORIES

- No light sources included
- Complete mounting and connecting accessories included

DOWNLOAD DATA

	DOWNLOAD DATA
PDF	User instruction
	Tender documents

LOGISTICAL DATA

Product code	Packaging unit (Pieces/Unit)	Dimensions (length x width x height)	Gross weight	Volume
4058075217485	Folding box 1	287 mm x 287 mm x 307 mm	1109.00 g	25.29 dm^3
4058075217492	Shipping box 4	590 mm x 590 mm x 320 mm	5950.00 g	111.39 dm^3

The mentioned product code describes the smallest quantity unit which can be ordered. One shipping unit can contain one or more single products. When placing an order, for the quantity please enter single or multiples of a shipping unit.

DISCLAIMER

Subject to change without notice. Errors and omission excepted. Always make sure to use the most recent release.

© 2022, LEDVANCE GmbH. All rights reserved.