EMDR-10

CONNECT AND PROTECT

Electronic controller for snow- and ice-melting on roof & gutters

PRODUCT OVERVIEW



The nVent RAYCHEM EMDR-10 controller is designed for operation with the nVent RAYCHEM heating cables for roof & gutters.

Depending on outdoor temperature and moisture in the gutter, the heating cable will only be switched on if necessary to ensure a correct drain of the melting water.

FEATURES

- Easy set-up and programming of the unit
- Operates heating cables by temperature and moisture monitoring
- 2 sensors (ambient and moisture sensor)
- Saves up to 80% energy; using energy savings modes based on Proportional Ambient Sensing Control (PASC) algorithm for enhanced energy savings
- Max. switching current 10 A (otherwise switch via power contactor)
- Alarm relay with change over contact to signal unit or sensor problems
- DIN Rail mountable in panels

GENERAL

Area of use: Non-hazardous locations; for nVent RAYCHEM heating cables.

TECHNICAL DATA

Control Unit	
Supply voltage	230 VAC, ±10%, 50Hz
Power consumption	max. 4 VA
Max. switching capacity	Imax 10(4)A / 230 VAC, SPST, potential 230 VAC
Temperature set points	–3°C to +6°C (factory setting +2°C)
Lower limit temperature range	–25°C to –5°C (factory setting –15°C) and test
Operating differential	±0.5 K
Measuring accuracy	±1.5 K
Moisture adjustment range	1 (max. sensitivity) to 10 (min. sensitivity) (factory setting 5)
Post heating time	60 minutes (only in temperature range < +1,5°C) energy saving selectable
Alarm relay	Imax 2(1)A / 230 VAC, SPDT, potential-free
Moisture sensor (output)	230 VAC with fuse 5 x 20mm T 315mA (included) according to IEC127-2/V

TECHNICAL DATA

Mounting	DIN rail according to DIN EN 50022-35
Low voltage directive	EN 60730 EMC EN 50081-1 (emission) and EN 50082-1 (immunity)
Terminals	2.5 mm^2 (stranded conductors), 4 mm^2 (solid conductors)
Protection class	II (panel mounted)
Enclosure	
Ambient temperature range*	0°C to +50°C
Ingress protection	IP20
Housing material	Noryl (self-extinguishing according to UL 94 V-0)
Dimensions	106 x 90 x 58 mm

* Continuous operation must be assured and the device must be protected from the penetration of moisture.

AMBIENT TEMPERATURE SENSOR (VIA-DU-A10)

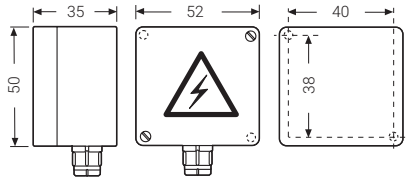

M16 (Dimensions in mm)

Sensor Type	PTC
Ingress protection	IP54
Terminals	max. 2.5 mm^2
Sensor cable	2 mm^2 x 1.5 mm^2 max. 100 m (not included)
Exposure temperature	–30°C to +80°C
Mounting	Wall mounting

MOISTURE SENSOR (HARD-45)

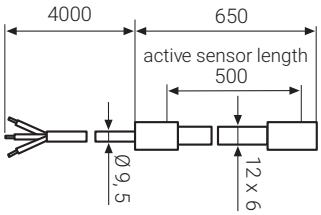

(Dimensions in mm)

Sensor Type	PTC
Arrangement	0.5 m to 0.8 m flat cable
Power consumption	9 W to 18 W
Ambient temperature range	–30°C to +65°C continuous
Supply voltage	230 VAC, ±10%
Connection cable	3 x 1.5 mm^2, 4 m pre-assembled extendable to max. 100 m at 3 x 1.5 mm^2

MODULE LAYOUT

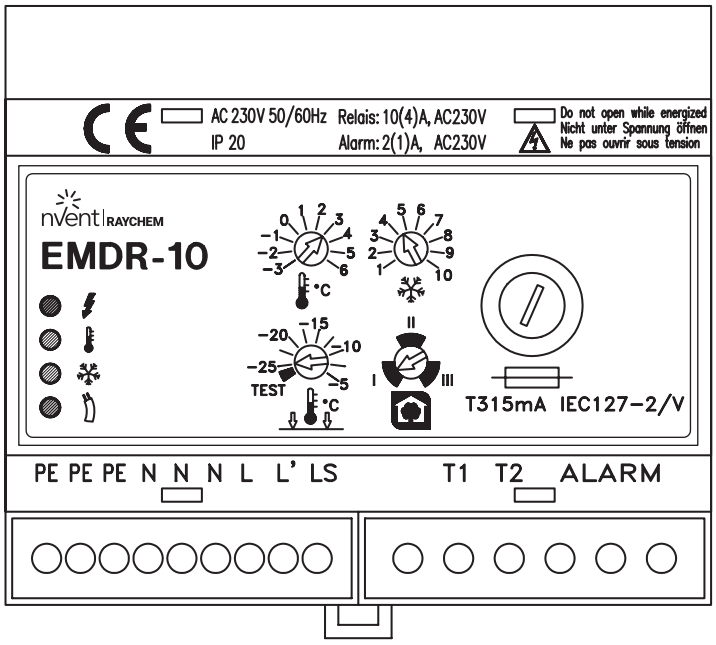

Display Elements

The LEDs indicate following operating conditions:

LED green
Device in operation (mains voltage).

Temperature setpoint
LED yellow
Adjusted air temperature threshold fallen below.
LED flashes in case of fault at the air temperature sensor (break or short circuit).

Moisture sensitivity
LED yellow
Adjusted moisture threshold exceeded.
LED flashes in case of fault at the moisture sensor (break) or fuse blown.

LED red
Heating cable energized.

DIMENSIONS

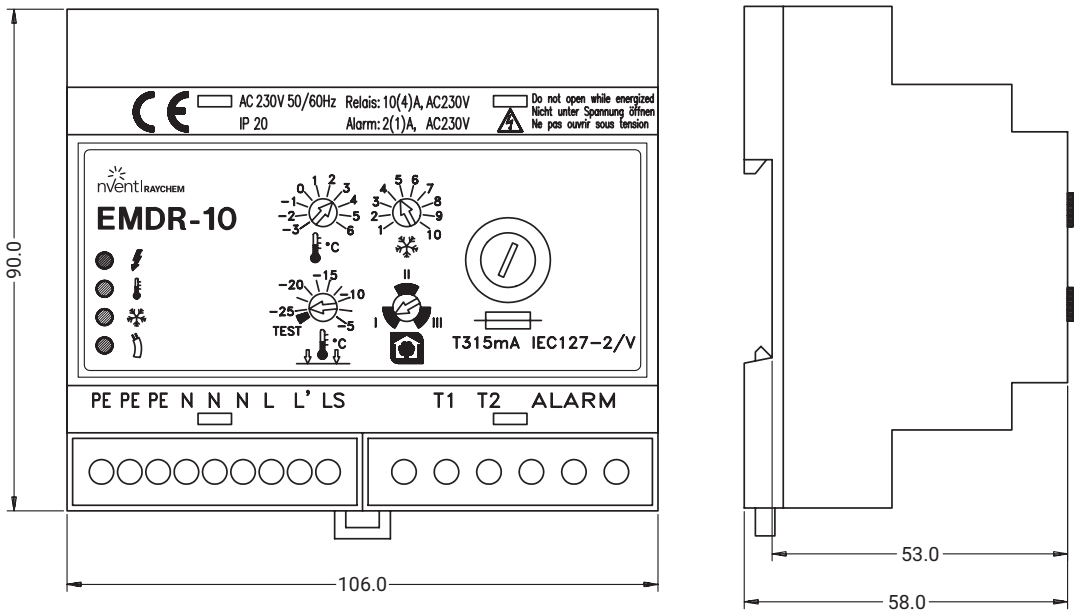

ELECTRICAL SCHEME

- The length of the heating cable determines the number and size of the circuit breakers.
- The use of a RCD (30 mA) is required by the manufacturer.
- Local standards for electrical connection must be observed.
- The device may only be connected up by an authorized electrician.
- Use C-characteristic circuit breaker!

Maximum heating cable length for –10°C start-up temperature at 230 VAC

Heating cable	GM-2X / GM2-XT	Frostop-Black
6 A (directly connected)	25 m	30 m
10 A (directly connected)	40 m	50 m
13 A (with contactor)	50 m	65 m
16 A (with contactor)	60 m	80 m
20 A (with contactor)	80 m	-

APPROVALS

Approvals	CE, UKCA, ROHS, WEEE
Electromagnetic Compatibility (EMC)	EN 61000-6-1: 2007; EN 61000-6-3:2007 + A1:2011

ORDERING DETAILS

Catalog number	EMDR-10
Part number	449554-000
Weight	350 g
In package	Control unit, Din-rail, 1 ambient sensor VIA-DU-A10, 1 moisture sensor HARD-45

EMDR-10 WITH DIRECTLY CONNECTED HEATING CABLE

Attention: max. heating cable length 40 m, circuit breaker max. 10A (C-characteristic)

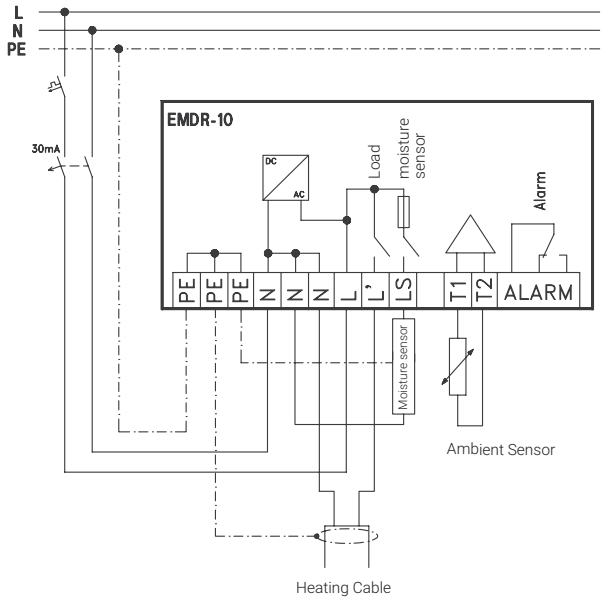

EMDR-10 WITH CONTACTOR

Attention: circuit breaker for EMDR-10 max. 10A

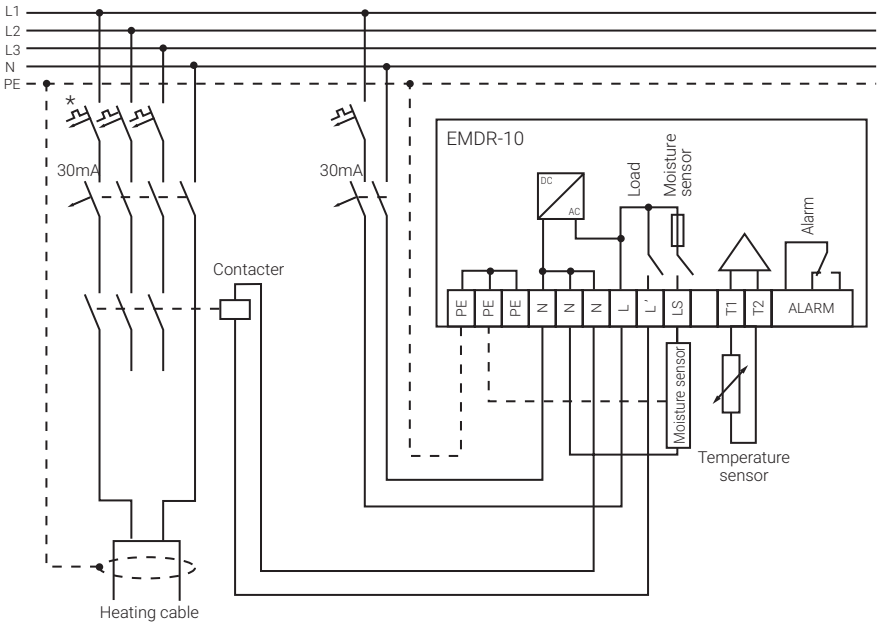

Europe, Middle East, Africa

Tel +32.16.213.511
Fax +32.16.213.603
info@nVent.com

Asia Pacific

Tel +86.21.2412.1688
Fax +86.21.5426.3167
info@nVent.com

Our powerful portfolio of brands:

CADDY ERICO HOFFMAN RAYCHEM SCHROFF TRACER

©2022 nVent. All nVent marks and logos are owned or licensed by nVent Services GmbH or its affiliates. All other trademarks are the property of their respective owners. nVent reserves the right to change specifications without notice.