OPPLE LIGHTING.

Highbay Performer G4

- NIEUW: Zeer hoge opbrengst van 145 lm/W
- Hoogwaardige LED highbay-oplossing met geavanceerd, uiterst vlak design
- Verkrijgbaar als Smart Lighting-oplossing (BLE), DALI2 of met ingebouwde bewegingssensor (MD)
- Flexibele oplossing dankzij drie verschillende bundelhoeken: breed, middel en asymmetrisch
- Vijf lumenpakketten, tot 32.000 lm
- Uitgerust met IP68-koppelstekker

IP68 CONNECTOR · FLICKER-FREE · IK08 · IP66 · DALI 2 · 1M

Specificaties

Artikelcode	Artikelomschrijving	Equivalent (W)	Vermogen (W)	Lumen	Efficiëntie (lm/W)	CCT (K)	Bundelhoek	Gewicht (kg/st)
Statisch								
545001002600	LEDHighbay-P4 80W-4000-95D	HID 250W	80	11600	145	4000	95°	2,10
545001002500	LEDHighbay-P4 80W-4000-50D	HID 250W	80	11600	145	4000	50°	2,10
545001002700	LEDHighbay-P4 80W-4000-50x95D	HID 250W	80	11600	145	4000	50° x 95°	2,10
545001014700	LEDHighbay-P4 80W-5700-95D	HID 250W	80	11600	145	5700	95°	2,10
545001014600	LEDHighbay-P4 80W-5700-50D	HID 250W	80	11600	145	5700	50°	2,10
545001014800	LEDHighbay-P4 80W-5700-50x95D	HID 250W	80	11600	145	5700	50° x 95°	2,10
545001003200	LEDHighbay-P4 110W-4000-95D	HID 400W	110	16000	145	4000	95°	2,10
545001003100	LEDHighbay-P4 110W-4000-50D	HID 400W	110	16000	145	4000	50°	2,10
545001003300	LEDHighbay-P4 110W-4000-50x95D	HID 400W	110	16000	145	4000	50° x 95°	2,10
545001015000	LEDHighbay-P4 110W-5700-95D	HID 400W	110	16000	145	5700	95°	2,10
545001014900	LEDHighbay-P4 110W-5700-50D	HID 400W	110	16000	145	5700	50°	2,10
545001015100	LEDHighbay-P4 110W-5700-50x95D	HID 400W	110	16000	145	5700	50° x 95°	2,10
545001001200	LEDHighbay-P4 155W-4000-100D	HID 400W	155	22000	145	4000	100°	3,10
545001001100	LEDHighbay-P4 155W-4000-60D	HID 400W	155	22000	145	4000	60°	3,10
545001003700	LEDHighbay-P4 155W-4000-60x100D	HID 400W	155	22000	145	4000	60° x 100°	3,10
545001012400	LEDHighbay-P4 155W-5700-100D	HID 400W	155	22000	145	5700	100°	3,10
545001015200	LEDHighbay-P4 155W-5700-60D	HID 400W	155	22000	145	5700	60°	3,10
545001015300	LEDHighbay-P4 155W-5700-60x100D	HID 400W	155	22000	145	5700	60° x 100°	3,10
545001000900	LEDHighbay-P4 220W-4000-100D	HID 600W	220	32000	145	4000	100°	3,10
545001001000	LEDHighbay-P4 220W-4000-60D	HID 600W	220	32000	145	4000	60°	3,10
545001003900	LEDHighbay-P4 220W-4000-60x100D	HID 600W	220	32000	145	4000	60° x 100°	3,10
545001012300	LEDHighbay-P4 220W-5700-100D	HID 600W	220	32000	145	5700	100°	3,10
545001015400	LEDHighbay-P4 220W-5700-60D	HID 600W	220	32000	145	5700	60°	3,10
545001015500	LEDHighbay-P4 220W-5700-60x100D	HID 600W	220	32000	145	5700	60° x 100°	3,10
DALI2								
545001002900	LEDHighbay-P4 80W-DALI-4000-95D	HID 250W	80	11600	145	4000	95°	2,10
545001002800	LEDHighbay-P4 80W-DALI-4000-50D	HID 250W	80	11600	145	4000	50°	2,10
545001003000	LEDHighbay-P4 80W-DALI-4000-50x95D	HID 250W	80	11600	145	4000	50° x 95°	2,10
545001015700	LEDHighbay-P4 80W-DALI-5700-95D	HID 250W	80	11600	145	5700	95°	2,10
545001015600	LEDHighbay-P4 80W-DALI-5700-50D	HID 250W	80	11600	145	5700	50°	2,10
545001015800	LEDHighbay-P4 80W-DALI-5700-50x95D	HID 250W	80	11600	145	5700	50° x 95°	2,10

Artikelcode	Artikelomschrijving	Equivalent (W)	Vermogen (W)	Lumen	Efficiëntie (lm/W)	CCT (K)	Bundelhoek	Gewicht (kg/st)
DALI2								
545001003500	LEDHighbay-P4 110W-DALI-4000-95D	HID 400W	110	16000	145	4000	95°	2,10
545001003400	LEDHighbay-P4 110W-DALI-4000-50D	HID 400W	110	16000	145	4000	50°	2,10
545001003600	LEDHighbay-P4 110W-DALI-4000-50x95D	HID 400W	110	16000	145	4000	50° x 95°	2,10
545001016000	LEDHighbay-P4 110W-DALI-5700-95D	HID 400W	110	16000	145	5700	95°	2,10
545001015900	LEDHighbay-P4 110W-DALI-5700-50D	HID 400W	110	16000	145	5700	50°	2,10
545001016100	LEDHighbay-P4 110W-DALI-5700-50x95D	HID 400W	110	16000	145	5700	50° x 95°	2,10
545001001400	LEDHighbay-P4 155W-DALI-4000-100D	HID 400W	155	22000	145	4000	100°	3,10
545001001300	LEDHighbay-P4 155W-DALI-4000-60D	HID 400W	155	22000	145	4000	60°	3,10
545001003800	LEDHighbay-P4 155W-DALI-4000-60x100D	HID 400W	155	22000	145	4000	60° x 100°	3,10
545001016300	LEDHighbay-P4 155W-DALI-5700-100D	HID 400W	155	22000	145	5700	100°	3,10
545001016200	LEDHighbay-P4 155W-DALI-5700-60D	HID 400W	155	22000	145	5700	60°	3,10
545001016400	LEDHighbay-P4 155W-DALI-5700-60x100D	HID 400W	155	22000	145	5700	60° x 100°	3,10
545001001600	LEDHighbay-P4 220W-DALI-4000-100D	HID 600W	220	32000	145	4000	100°	3,10
545001001500	LEDHighbay-P4 220W-DALI-4000-60D	HID 600W	220	32000	145	4000	60°	3,10
545001004000	LEDHighbay-P4 220W-DALI-4000-60x100D	HID 600W	220	32000	145	4000	60° x 100°	3,10
545001016600	LEDHighbay-P4 220W-DALI-5700-100D	HID 600W	220	32000	145	5700	100°	3,10
545001016500	LEDHighbay-P4 220W-DALI-5700-60D	HID 600W	220	32000	145	5700	60°	3,10
545001016700	LEDHighbay-P4 220W-DALI-5700-60x100D	HID 600W	220	32000	145	5700	60° x 100°	3,10
Smart Lighting								
545001009800	LEDHighbay-P4 80W-4000-W-BLE	HID 250W	80	11600	145	4000	95°	2,10
545001009700	LEDHighbay-P4 80W-4000-N-BLE	HID 250W	80	11600	145	4000	50°	2,10
545001009600	LEDHighbay-P4 80W-4000-AS-BLE	HID 250W	80	11600	145	4000	50° x 95°	2,10
545001024400	LEDHighbay-P4 80W-5700-W-BLE	HID 250W	80	11600	145	5700	95°	2,10
545001024300	LEDHighbay-P4 80W-5700-N-BLE	HID 250W	80	11600	145	5700	50°	2,10
545001024500	LEDHighbay-P4 80W-5700-AS-BLE	HID 250W	80	11600	145	5700	50° x 95°	2,10
545001009400	LEDHighbay-P4 110W-4000-W-BLE	HID 400W	110	16000	145	4000	95°	2,10
545001009500	LEDHighbay-P4 110W-4000-N-BLE	HID 400W	110	16000	145	4000	50°	2,10
545001009300	LEDHighbay-P4 110W-4000-AS-BLE	HID 400W	110	16000	145	4000	50° x 95°	2,10
545001024700	LEDHighbay-P4 110W-5700-W-BLE	HID 400W	110	16000	145	5700	95°	2,10
545001024600	LEDHighbay-P4 110W-5700-N-BLE	HID 400W	110	16000	145	5700	50°	2,10
545001024800	LEDHighbay-P4 110W-5700-AS-BLE	HID 400W	110	16000	145	5700	50° x 95°	2,10
545001009100	LEDHighbay-P4 155W-4000-W-BLE	HID 400W	155	22000	145	4000	100°	3,10
545001009200	LEDHighbay-P4 155W-4000-N-BLE	HID 400W	155	22000	145	4000	60°	3,10
545001009000	LEDHighbay-P4 155W-4000-AS-BLE	HID 400W	155	22000	145	4000	60° x 100°	3,10
545001025000	LEDHighbay-P4 155W-5700-W-BLE	HID 400W	155	22000	145	5700	100°	3,10
545001024900	LEDHighbay-P4 155W-5700-N-BLE	HID 400W	155	22000	145	5700	60°	3,10
545001025100	LEDHighbay-P4 155W-5700-AS-BLE	HID 400W	155	22000	145	5700	60° x 100°	3,10
545001008800	LEDHighbay-P4 220W-4000-W-BLE	HID 600W	220	32000	145	4000	100°	3,10
545001008900	LEDHighbay-P4 220W-4000-N-BLE	HID 600W	220	32000	145	4000	60°	3,10
545001008700	LEDHighbay-P4 220W-4000-AS-BLE	HID 600W	220	32000	145	4000	60° x 100°	3,10
545001025300	LEDHighbay-P4 220W-5700-W-BLE	HID 600W	220	32000	145	5700	100°	3,10
545001025200	LEDHighbay-P4 220W-5700-N-BLE	HID 600W	220	32000	145	5700	60°	3,10
545001025400	LEDHighbay-P4 220W-5700-AS-BLE	HID 600W	220	32000	145	5700	60° x 100°	3,10
Bewegingssensor, Daglicht sensor								
545001010300	LEDHighbay-P4 80W-4000-W-MD	HID 250W	80	11600	145	4000	95°	2,30
545001010100	LEDHighbay-P4 80W-4000-N-MD	HID 250W	80	11600	145	4000	50°	2,30
545001010400	LEDHighbay-P4 80W-4000-AS-MD	HID 250W	80	11600	145	4000	50° x 95°	2,30
545001010200	LEDHighbay-P4 110W-4000-W-MD	HID 400W	110	16000	145	4000	95°	2,30
545001010500	LEDHighbay-P4 110W-4000-N-MD	HID 400W	110	16000	145	4000	50°	2,30
545001010600	LEDHighbay-P4 110W-4000-AS-MD	HID 400W	110	16000	145	4000	50° x 95°	2,30
545001011500	LEDHighbay-P4 155W-4000-W-MD	HID 400W	155	22000	145	4000	100°	3,30
545001010700	LEDHighbay-P4 155W-4000-N-MD	HID 400W	155	22000	145	4000	60°	3,30
545001010800	LEDHighbay-P4 155W-4000-AS-MD	HID 400W	155	22000	145	4000	60° x 100°	3,30
545001011000	LEDHighbay-P4 220W-4000-W-MD	HID 600W	220	32000	145	4000	100°	3,30
545001010900	LEDHighbay-P4 220W-4000-N-MD	HID 600W	220	32000	145	4000	60°	3,30
545001011100	LEDHighbay-P4 220W-4000-AS-MD	HID 600W	220	32000	145	4000	60° x 100°	3,30

DALI2 uitvoering compatibel met centrale noodverlichting volgens de norm EN 50172. Ga voor meer technische informatie naar de bijlage.

Accessoires

545098000500
LEDHighbay-P4 Bracket-D330

545098000600
LEDHighbay-P4 Bracket-D420

545098003600
LEDHighbay-P4 Reflector-D420

545098003500
LEDHighbay-P4 Reflector-D330

543098021900
LEDFixture-IP68-Connector-Kit-3

543098022000
LEDFixture-IP68-Connector-Kit-5

543098024500
LEDHighbay-P4-Remote Controller

545098003200
LEDHighbay-Pole and Adapter

545098003900
LEDHighbay-Pole

Highbay Pole and Adapter (545098003200) is alleen geschikt voor 80W en 110W versies. Highbay Pole (545098003900) is alleen geschikt voor 155W en 220W versies.
Remote Controller kan alleen gebruikt worden in combinatie met de MD versie. Remote Controller wordt verkocht exclusief 2 AAA batterijen. Ga voor meer technische informatie (Remote Controller) naar de bijlage.

Technische specificaties	
Levensduur (L70)	70.000 u
Levensduur (L80)	50.000 u
Aan-/Uit-cycli	100.000
Kleurconsistentie (SDCM)	4
Dimbaarheid	On-Off / DALI / BLE / MD
Afwerking	Grijs Pantone 417U
CRI	≥ 80
Beschermingsgraad (IP)	IP66
Slagvastheid	IK08
Beschermingsklasse	I
Risicogroep (EN 62471)	RG1
Voorschakelapparaat inbegrepen	Ja
Gloeidraadtest	850°C
Uitvalkans driver (bij 5.000 uur)	0.5 %
Vermogensfactor	≥ 0,9
Piekspanning beveiliging	4 kV

Elektrische aansluiting	
Frequentie	50/60 Hz
Nom. spanning	220~240 V AC
DC ingangsspanning	Zie catalogusbijlage Aansluitwaarden
230V Kabellengte	1 m

Materiaal eigenschappen	
Materiaal behuizing	Aluminium
UV-bestendig	Ja
Materiaal optiek	Polycarbonaat
Cover materiaal	Polycarbonaat

Toepassingscondities	
Bedrijfstemperatuur	-30~+50°C
Gebruikstemperatuur	+25°C
Opslagtemperatuur	-25~+50°C

5 JAAR GARANTIE

Maatschets (mm)

LEDHighbay-P4
80W & 110W

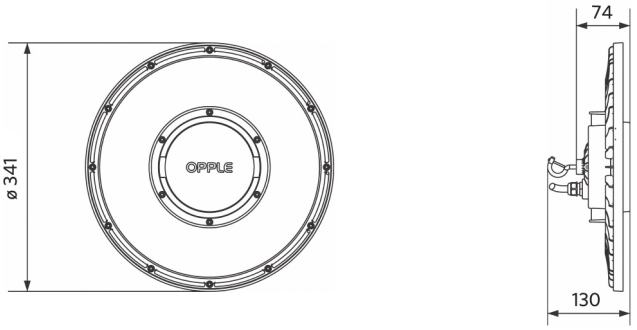

LEDHighbay-P4
155W & 220W

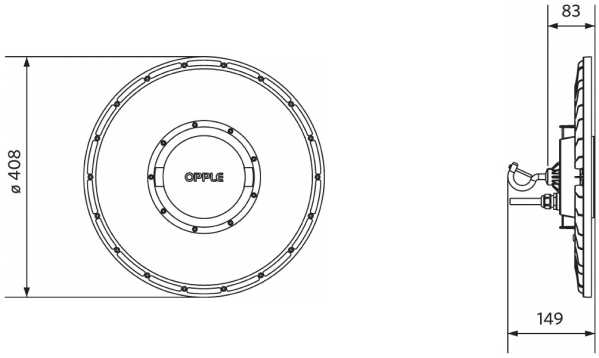

LEDHighbay-P4
80W & 110W Motion Detection

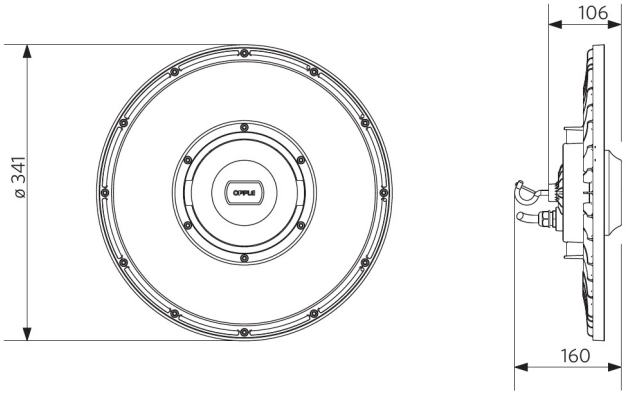

LEDHighbay-P4
155W & 220W Motion Detection

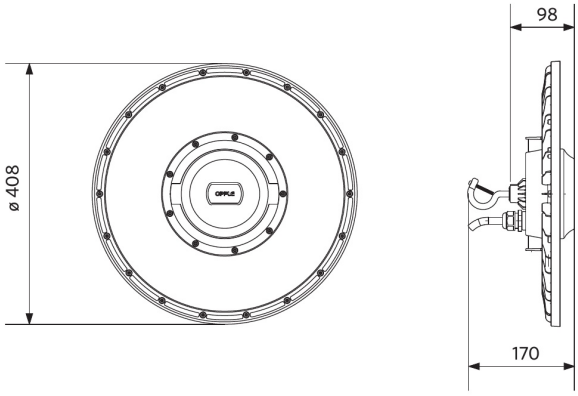

LEDHighbay-P4 Bracket-D330

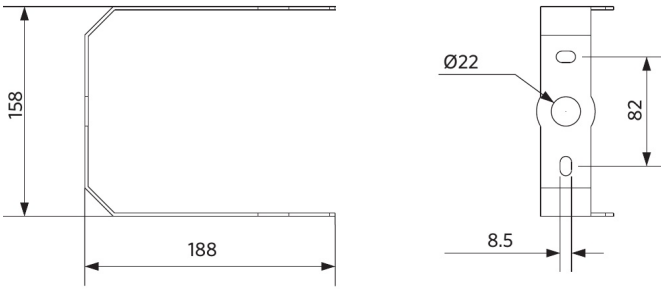

LEDHighbay-P4 Bracket-D420

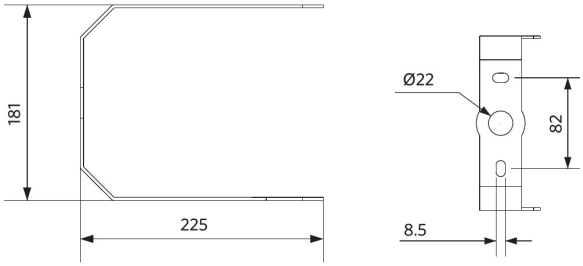

LEDHighbay-P4 Reflector-D330

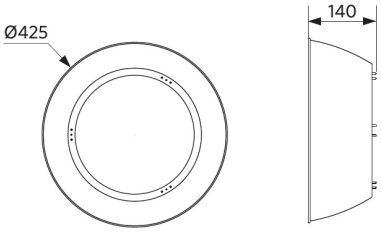
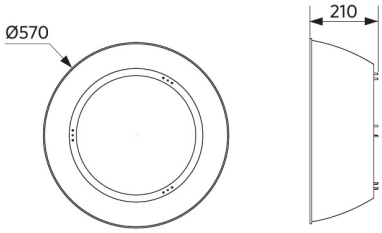
LEDHighbay-P4 Reflector-D420