LED T8 Batten

OPPLE

Version date 22-06-2017
www.opple.com

Item Code	CCT	kg
140063301	3000K	0.28kg
140063302	4000K	0.28kg
140063303	6500K	0.28kg
140063304	3000K	0.46kg
140063305	4000K	0.46kg
140063306	6500K	0.46kg
140063307*	\	0.004kg
140063308*	\	0.05kg

* Accessories should be purchased separately.

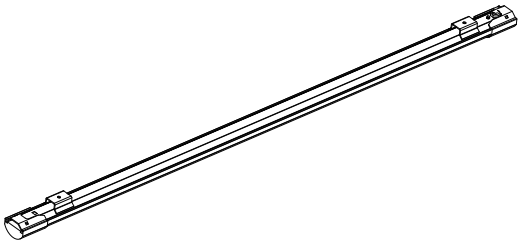

Model	L (mm)	W (mm)	H (mm)
LED T8 Batten 600mm 19W	600	50	47
LED T8 Batten 1200mm 38W	1200	50	47

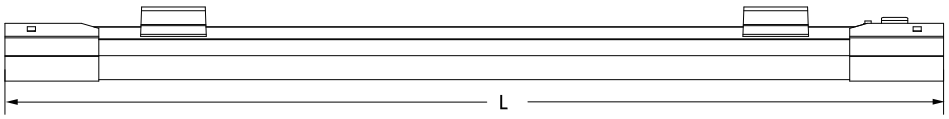

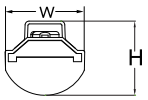

Ceiling

①

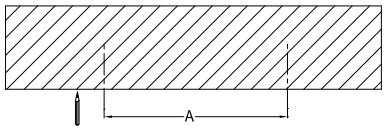

Model	A
LED T8 Batten 600mm 19W	385.5mm
LED T8 Batten 1200mm 38W	985.5mm

②

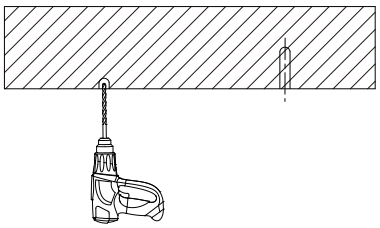

③

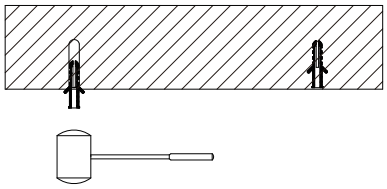

④

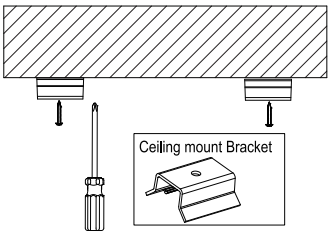

⑤

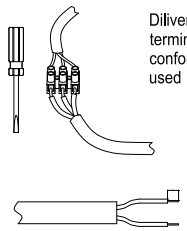

Dilivered with lead wires only, terminal block and box which conformed to IEC60598 must be used

⑥

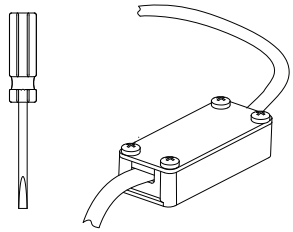

⑦

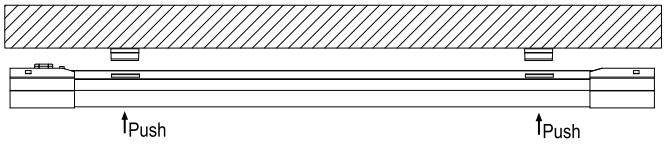

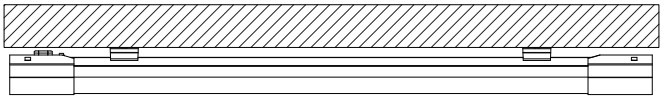

Pendant

①

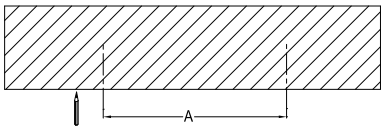

Model	A
LED T8 Batten 600mm 19W	385.5mm
LED T8 Batten 1200mm 38W	985.5mm

②

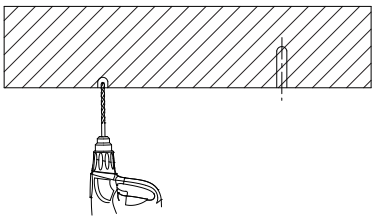

③

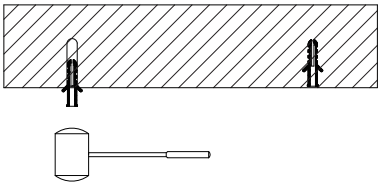

120057161

OPPLE

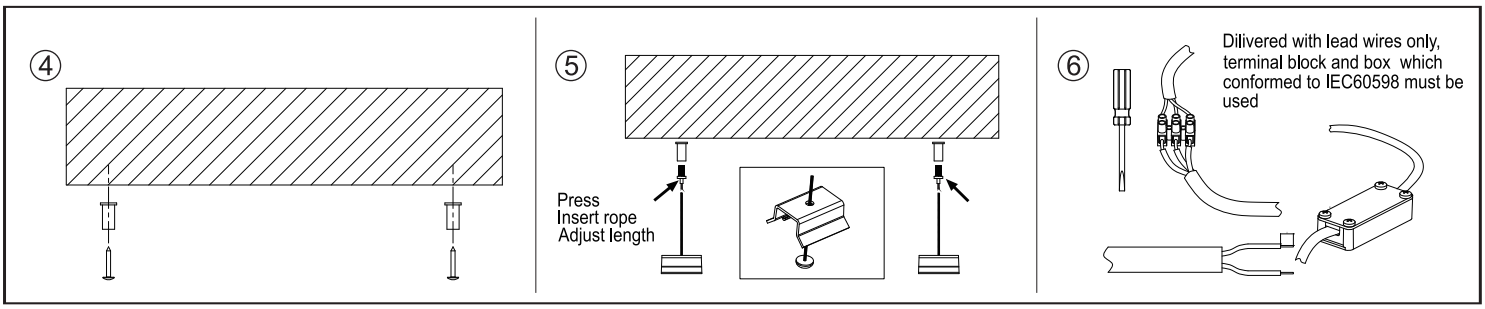

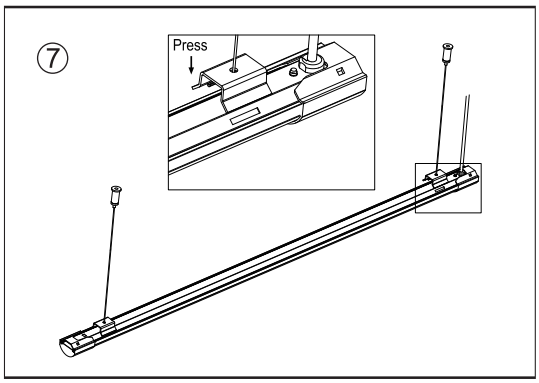

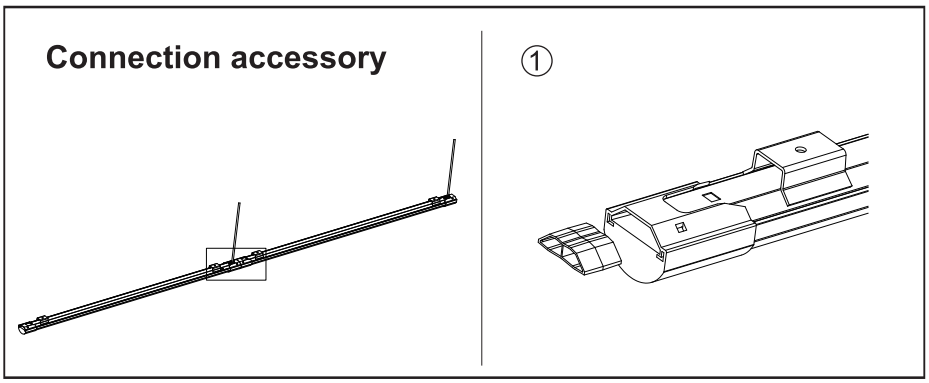

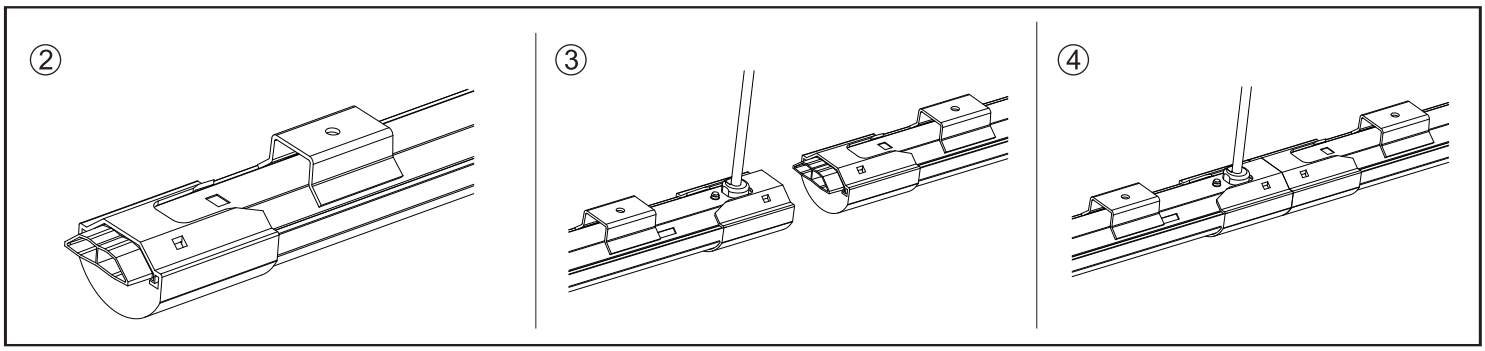

In case of damage to the wire,it has to be replaced only by the manufacturer, distributor or by an expert,to avoid risks.

Caution:Any operation on LED module is forbidden while power-on.

Zur Vermeidung von Risiken müssen defekte Leitungen ausschließlich vom Hersteller, Inverkehrbringer oder Fachmann ausgetauscht werden.

Achtung: In Betrieb ist keine Arbeit am LED-Modul erlaubt.

For non-user replaceable light sources.

The light source contained in this luminaire shall only be replaced by the manufacturer or his service agent or a similar qualified person.

IP20

EN 60598

650°

Suzhou Opple Lighting Co.,Ltd.
215200
East Side, Fenyang Road,
Fenhu Economic Development Zone,
Wujiang City, Jiangsu Province,
P.R.China

OPPLE Lighting B.V.
Materiaalweg 6-6A
5681 RJ Best
The Netherlands
service@opple.com
www.opple.com