Distribution manifold in composite material for geothermal systems

110 series

01221/20 EN
replaces 01221/12 EN

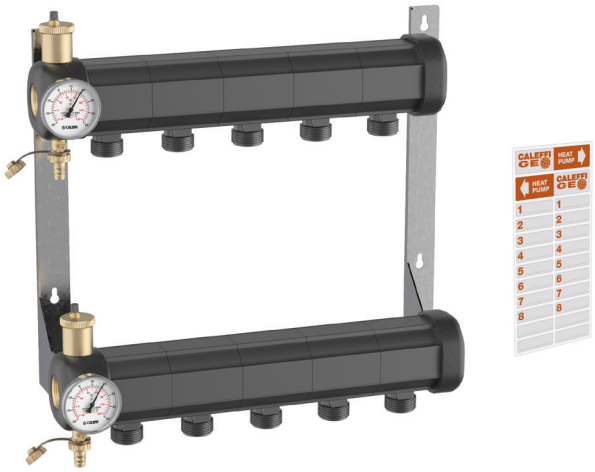

Function

CALEFFI GEO® series manifolds are used to control and distribute the medium in closed circuit geothermal systems.
In circuits with geothermal heat pump the thermal medium is generally a mixture of water and anti-freeze fluid since the temperatures can be extremely low. The components are made with high-performance materials for this type of application.
They are supplied pre-assembled, complete with end fittings and temperature gauges, or as separate pieces to be assembled.

Reference documentation

- Tech. Broch. 01222 Instrument holder manifold for 115 series geothermal systems
- Tech. Broch. 01234 Shut-off valves for 111 series geothermal systems
- Tech. Broch. 01235 Balancing valves for 112 series geothermal systems
- Tech. Broch. 01236 Float flow meter for 113 series geothermal systems

Product range

110 series Pre-assembled geothermal manifold size DN 50 (1 1/4")

Technical specifications

Manifold

Materials

Flow manifold	
Body:	PA66G30
Return manifold	
Body:	PA66G30
End fitting	
Air vent	
Obturator stem:	brass EN 12164 CW614N
Spring:	stainless steel
Seals:	EPDM
Float:	PP
Fill/drain cock	
Body:	brass EN 12165 CW617N

Performance

Medium:	water, glycol solutions, saline solutions
Maximum percentage of glycol:	50 %
Maximum flow rate:	7 m³/h
Max. working pressure:	6 bar
System test pressure:	10 bar
Working temperature range:	-10–60 °C
Ambient temperature range:	-20–60 °C
Main connections:	1 1/4”
Outlets:	42 p.2,5 TR.
Centre distance:	100 mm

Hydraulic characteristics

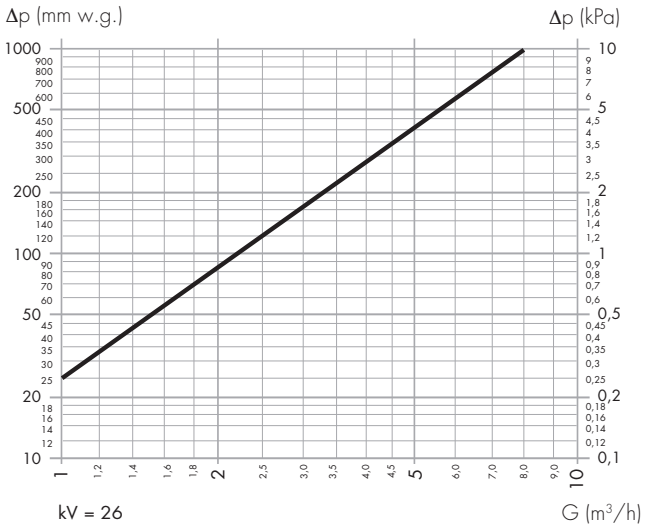

Dimensions

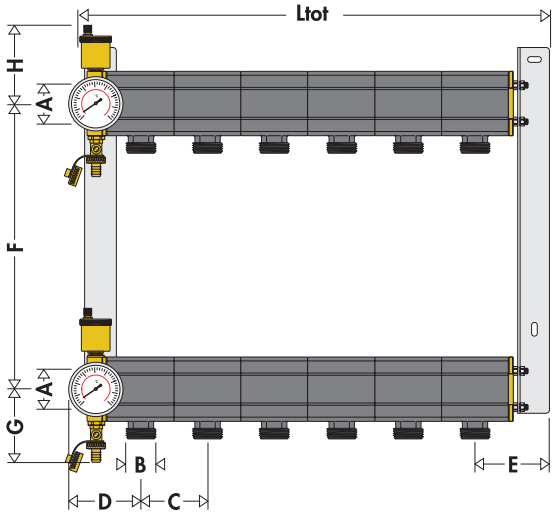

Series	DN	A	B	C	D	E	F	G	H
110	50	1 1/4"	42 p.2,5 TR	100	99	111	380	111	117

Pre-assembled code	**110**7B5	**110**7C5	**110**7D5	**110**7E5	**110**7F5	**110**7G5	**110**7H5				
Modular manifold	x	x	x	x	x	x	x	x	x	x	x
N°outlets	2	3	4	5	6	7	8	9	10	11	12
L tot	**296**	**396**	**496**	**596**	**696**	**796**	**896**	**996**	**1096**	**1196**	**1296**

Characteristic components

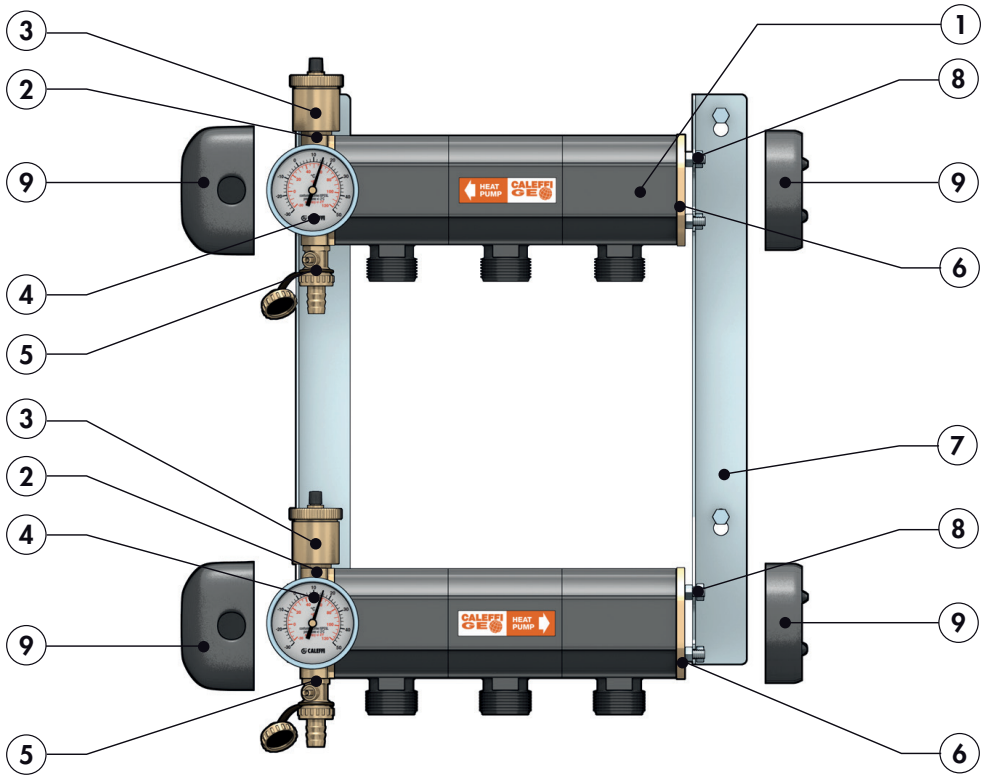

Pre-assembled unit complete with:

1 Technopolymer manifold complete with sealing gasket
2 Brass end fitting
3 Air vent
4 Temperature gauge with pocket
5 Fill / drain cock
6 Closure plate
7 Pair of stainless steel brackets
8 stainless steel tie-rods including screws and bolts for seal and bracketing
9 Insulation

Applications

The ground contains a large amount of heat from two origins: one external and one internal.
Heat from external sources comes mainly from sun and rain and penetrates the outer layers of the earth up to a depth of 15 m. Heat from inside is generated by the nuclear decay of radioactive substances in rocks and the substratum: this is the source that heats the soil to a depth of more than 20 m which, technically speaking, can be defined geothermal heat. Actually the term geothermal is now used for any type of heat stored in the ground.
Ground source heat pumps use this type of energy: the heat exchange between the ground and the pump takes place via the closed circuit probes.
The Caleffi GEO® series geothermal manifold is the main connection between the various geothermal probe circuits and the heat pump, which is the fulcrum of the system.

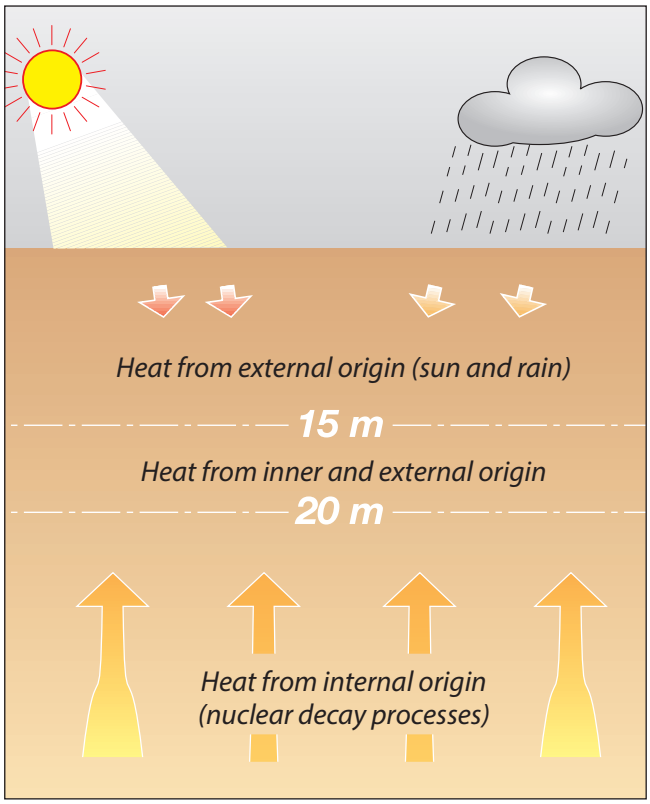

Horizontal geothermal probe system

Heat pump systems with horizontal probes use the heat stored in the layers of the earth nearest to the surface (up to a depth of 15m); this heat comes primarily from the sun and rain. For this reason horizontal probes withstand fluctuations in surface temperature better and, to be installed, they need large areas clear of constructions, paving or vegetation that can prevent heat reaching the ground.
Pipes made of polyethylene (or reticulated polyethylene, depending on the type of ground) are inserted horizontally into the ground in an excavation from 1 to 3 m deep with a centre distance of 50 to 80 cm. After laying, the excavated ground is put back and compacted.
The sizing of these manifolds is performed according to the thermal efficiency of the ground, which is affected by its composition, compactness and the quantity of water it contains. It is necessary to pay attention to the sizing to prevent not only malfunctioning and low output of the heat pump, but also to prevent harmful consequences for vegetation such as freezing roots.

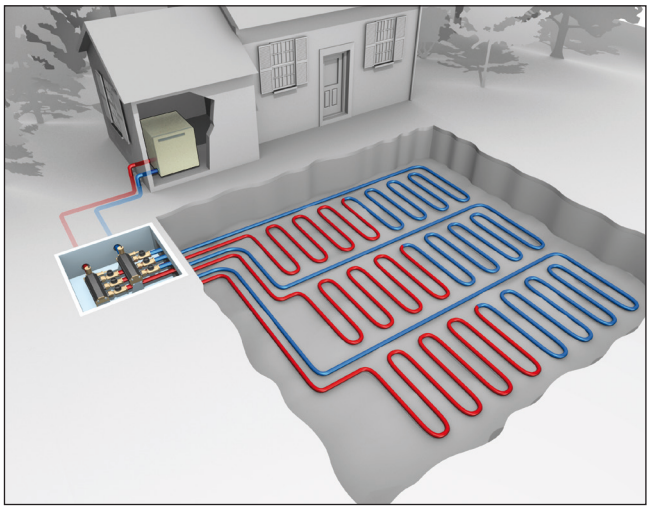

Vertical geothermal probe systems

Systems with vertical ground source probes are based on the fact that, below a depth of 20 m, the temperature of the subsoil is constant and no longer depends on daily or seasonal temperature changes: below 20 m, the temperature of the ground increases by approximately 3 °C every 100 m in depth.
Vertical probes, varying in length from 20 to 150 m, are made with holes in which one or two U-circuits are sunk, made with high-resistance PE pipes (generally with diameters DN 25, DN 32 and DN 40) that are specific for ground source applications. To aid their insertion in the holes, these circuits are ballasted with special disposable weights of 15 – 20 kg. After laying the circuits, the gap between the wall of the hole and the pipe is filled with a highly thermal conductive mixture comprising cement and bentonite (a clay material).

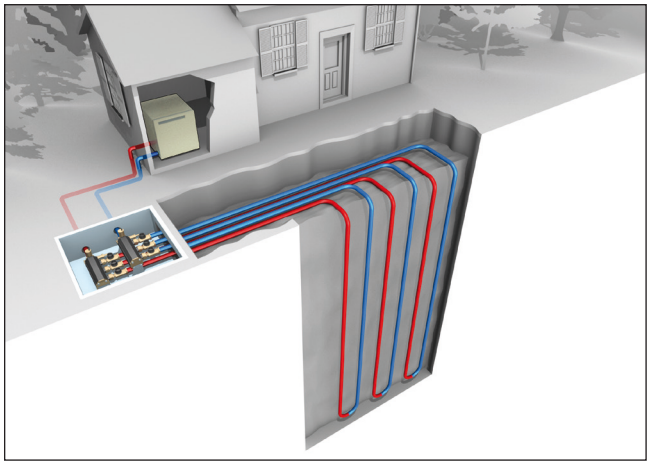

Construction details

Specific composite material

The manifolds are made using a technpolymer (PA66G30) specifically selected for geothermal applications.

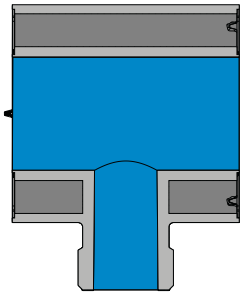

Polyamide features good characteristics such as mechanical strength, excellent impact strength and high toughness.
PA 66 is more resistant to hydrolysis and glycol. Moreover, by adding 30% glass fibre the material gains resistance to tensile stress, higher rigidity and dimensional stability. These properties of the raw material, combined with an appropriate shape of the most stressed areas, make the manifold ideal for geothermal applications.

Condensation protection

The reduced thermal conductivity of polyamide allows to create a barrier against the heat transmission; this property, combined with the air gap in the manifold, insulates the medium from the outside and limits condensation.
Insulation is applied to the brass parts of the end fitting and closure plate, designed specifically to assure the continuous insulation of the manifold.

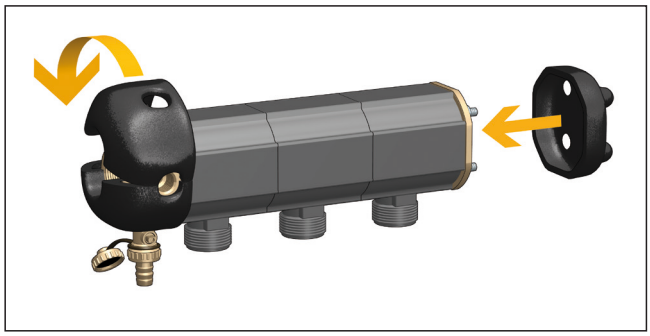

Manifold modularity

The fully modular design of the manifold was engineered to allow it to be easily fitted on a bench then mounted onto wall brackets. This assembly feature facilitates the setting up of the probes and their connection to the manifold.
The modules are assembled on the threaded bar by inserting a seal between them to isolate the water channel and the individual air gaps.
The brass end fittings compact the manifold and provide a housing for the control devices.
Apply the brackets on the wall, place the manifold in position and lay the pipes for the connection to the manifold. This makes it possible to adjust the length of the geothermal pipes.
The manifold can be unhooked from the supporting brackets and probes easily connected using the DECA fitting on the balancing valve (see 112, 113, 111 series).
The manifold can then be hooked to the brackets using the specially designed quick-connection.

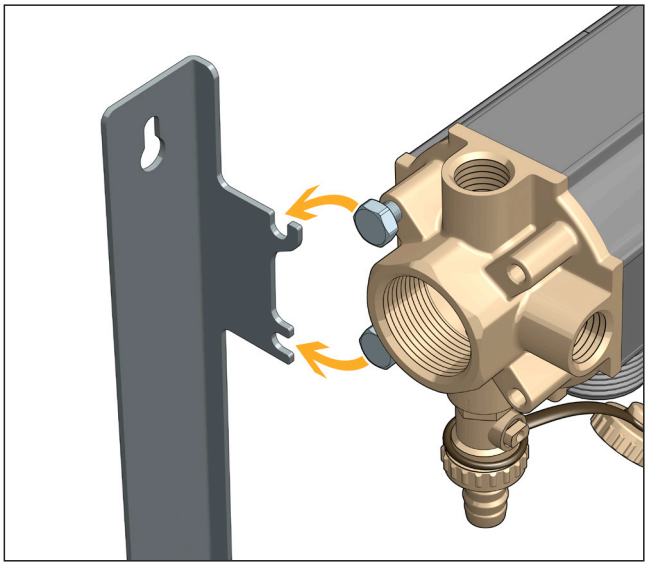

End fitting

The end fitting is equipped with an automatic air vent, temperature gauge and fill/drain cock.

The air vent features an air-release mechanism with PP float and can be easily replaced thanks to the threaded connection, thus facilitating any control and maintenance procedure.
The scale on the temperature gauge with back connection is from -30 to 50 °C, suitable for working temperature ranges of the geothermal system.
The difference between flow and return temperature is in fact the first indication that a geothermal system is working properly.
The fill/drain cock allows the filling of the circuit.

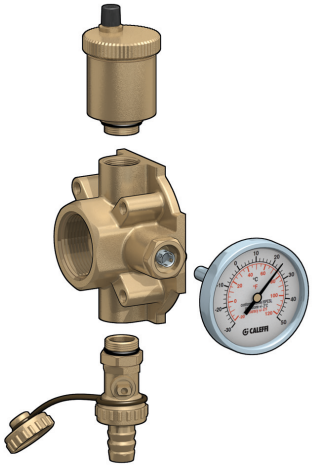

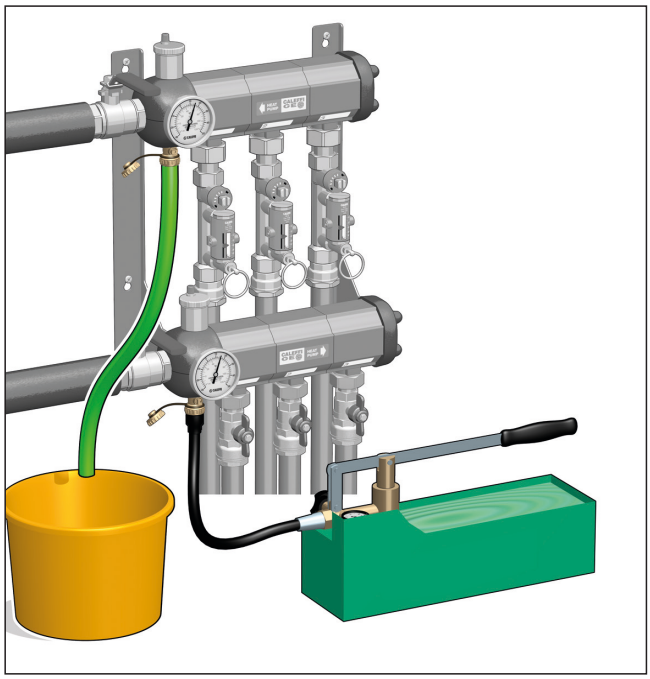

Circuit branching

The outlet connections of each individual circuit have a special threading to be used with the special nut fitted on the shut-off valves. The trapezoidal threading increases mechanical resistance as it improves load transmission.
Pipe of the geothermal circuit is connected to the manifold via the shut-off valve or balancing valve using a polyethylene pipe fitting.

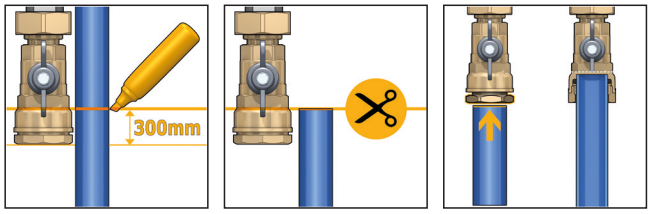

Circuit identification

An adhesive label with the circuit number or ID can be affixed at the outlet point of each circuit. This can be very useful for system maintenance or in case of leakages.

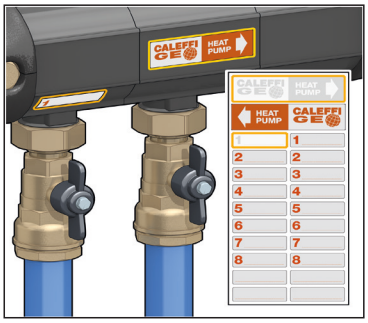

Reversibility

The manifold is reversible to adapt the position of the probes with respect to the heat pump.
The pre-assembled version is fitted with the connections to the main pipes on the right side. This means that the heat pump would be on the right of the manifold.
Alternatively, the manifold can be assembled with the connections on the left side.

right-side version

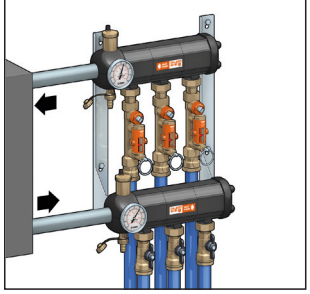

left-side version

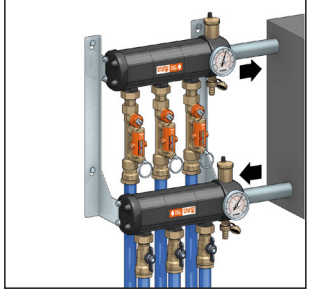

Flexible installation

The manifold was designed for vertical (wall) or horizontal (in an outside well for example) installation.
This allows the maximum flexibility when choosing the suitable place, depending on the range of the geothermal probes and their relative configuration.

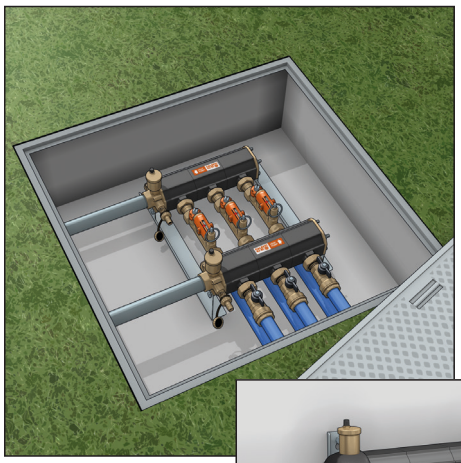

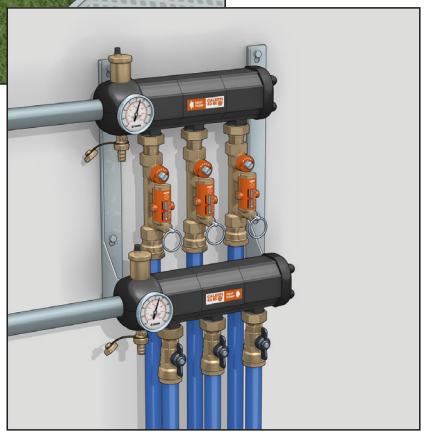

Geothermal system components

1 The probes are the source the heat is extracted from or transferred to.
2 The geothermal manifold conveys the different circuits into the main one connected to the heat pump. The balancing systems allow a better use of the heat exchange with the ground and reduce the energy consumption by the heat pump and circulators.
3 The purpose of the system control, regulation and safety devices is to protect the heat pump from malfunction or potential failure.
4 The heat pump is used to transfer heat from a source at a lower temperature to another at a greater temperature. It uses electrical energy during the compression and expansion phase of the medium contained within the internal cycle of the machine.
5 The storage tank ensures the machine can run constantly, improving system efficiency (COP) and extending the life cycle of the machine.
6 The emissions system must be the same kind of low/medium temperature one used in underfloor heating.

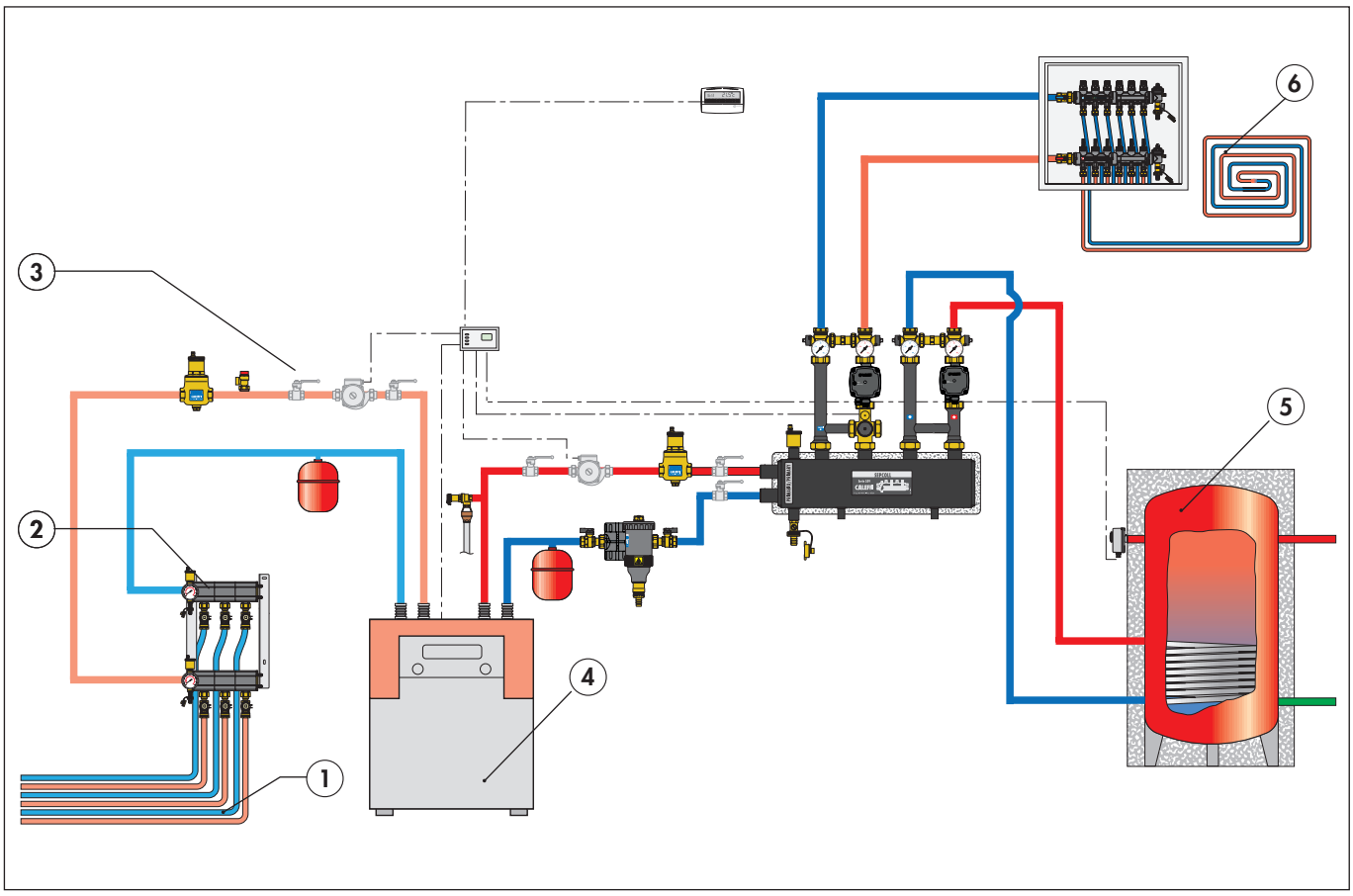

Accessories

110

Modular manifold single module in technopolymer.

Maximum working pressure: 6 bar.
Max. system test pressure: 10 bar.
Working temperature range: -10–60 °C.
Ambient temperature range: -20–60 °C.
Medium: water, glycol solutions, saline solutions.
Max. percentage of glycol: 50%.
Manifold DN 50.
Outlet connections (threading 42 p.2,5 TR) with mechanical seal for 111 series shut-off valves, 112 series balancing valves and 113 series flow meters.

Code
110700

110

Stainless steel tie-rods for assembling modular manifolds.
M8 threaded stainless steel bar.

Code	
110012	for manifold with 2 circuits
110013	for manifold with 3 circuits
110014	for manifold with 4 circuits
110015	for manifold with 5 circuits
110016	for manifold with 6 circuits
110017	for manifold with 7 circuits
110018	for manifold with 8 circuits
110019	for manifold with 9 circuits
110020	for manifold with 10 circuits
110021	for manifold with 11 circuits
110022	for manifold with 12 circuits

110

Assembly kit for modular manifolds. Consisting of:
- brass end fitting with automatic air vent, fill/drain cock;
- brass head plug;
- pre-formed shell insulation;
- screws and bolts for rods and bracketing;
- set of labels for flow direction and circuit identification;
- temperature gauge with pocket (-30–50 °C);
- 2 sealing gaskets.

Maximum working pressure: 6 bar.
Max. system test pressure: 10 bar.
Working temperature range: -10–60 °C.
Ambient temperature range: -20–60 °C.
Medium: water, glycol solutions, saline solutions.
Max. percentage of glycol: 50%.

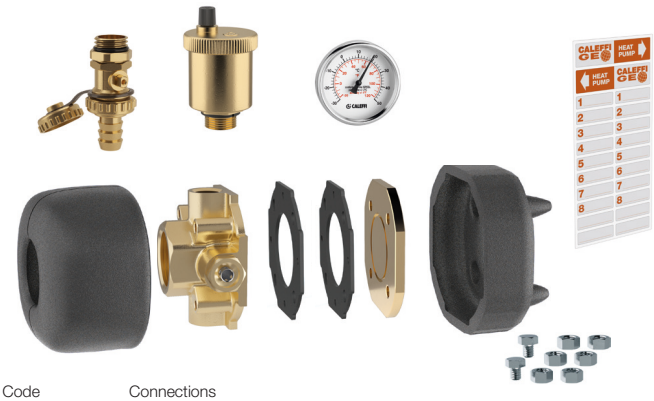

Code	Connections
110750	1 1/4”

110

Pair of stainless steel mounting brackets to secure modular manifolds.
Rapid wall coupling system.
System for rapidly coupling the manifold on the brackets.
Complete with screws and wall anchors.

Code
110001

112

tech. broch. 01235

Balancing valve with flow meter.
Complete with fitting for polyethylene pipe.
Direct reading of flow rate.
Ball valve for flow rate adjustment.
Graduated scale flow meter with magnetic movement flow rate indicator.
Brass valve body and flow meter.
Connection to manifold:
female connection with captive nut 42 p.2,5 TR.
Maximum working pressure: 10 bar.
Working temperature range: -10–40 °C.
Ambient temperature range: -20–60 °C.
Medium: water, glycol solutions, saline solutions.
Max. percentage of glycol: 50%.
Accuracy: ±10%.

Code	Connection	Scale (m^3/h)
112621	42 p.2,5 TR x Ø 25	0,3–1,2
112631	42 p.2,5 TR x Ø 32	0,3–1,2
112641	42 p.2,5 TR x Ø 40	0,3–1,2

112

tech. broch. 01235

Insulation for balancing valves.
Material: closed cell expanded PE-X.
Thickness: 10 mm.
Density: int. part 30 kg/m^3, ext. part: 80 kg/m^3.
Thermal conductivity (DIN 52612):
at 0 °C: 0.038 W/(m·K) at 40 °C: 0.045 W/(m·K).
Coefficient of resistance to water vapour (DIN 52615): > 1,300
Working temperature range: 0–100 °C.
Reaction to fire (DIN 4102): class B2.

Code	Utilisation
112001	Ø 25 - Ø 32
112003	Ø 40

871

Ball valve complete with fitting for polyethylene pipe.
Brass body.
Connection to manifold:
female connection with captive nut 42 p.2,5 TR.
Maximum working pressure: 16 bar.
Working temperature range: -10–40 °C.
Ambient temperature range: -20–60 °C.
Medium: water, glycol solutions, saline solutions.
Max. percentage of glycol: 50%.

Code	Connection
871025	42 p.2,5 TR x Ø 25
871032	42 p.2,5 TR x Ø 32
871040	42 p.2,5 TR x Ø 40

110

Union with sealing gasket.
Maximum working pressure: 16 bar.
Maximum working temperature: 40 °C.

Code	Connection
110050	42 p.2,5 TR x 3/4”
110060	42 p.2,5 TR x 1”

SPECIFICATION SUMMARY

110 series

Modular technopolymer distribution manifold for closed circuit geothermal systems (from 2 to 8 outlets). PA66G30 body. Main connections 1 1/4” Outlet connection 42 p. 2,5 mm TR. with high mechanical resistance. Outlet centre distance 100 mm. Medium water, saline and glycol solutions with maximum percentage of glycol 50%. Maximum working pressure 6 bar. Maximum system test pressure 10 bar. Working temperature range -10–60 °C. Ambient temperature range -20–60 °C. Maximum flow rate 7 m^3/h. Consisting of: pair of brass end fittings complete with automatic air vent, Ø 80 mm temperature gauges with pocket, temperature gauge scale -30–50 °C, fill/drain cocks; insulation for end fittings; brass end fitting plugs; insulation for end plugs; EPDM seals; stainless steel rods to assemble modular manifolds; M8 threaded bar; pair of stainless steel mounting brackets; flow direction and circuit identification labels; wall anchors.

We reserve the right to make changes and improvements to our products and the related technical data in this publication, at any time and without prior notice. The website www.caleffi.com always has the most up-to-date version of the document, which should be used for technical verifications.

Caleffi S.p.A.
S.R. 229 n. 25 · 28010 Fontaneto d’Agogna (NO) · Italy
Tel. +39 0322 8491 · Fax +39 0322 863305
info@caleffi.com · www.caleffi.com
© Copyright 2020 Caleffi