SIEMENS

Data sheet 3VA2110-0KP36-0AA0

circuit breaker 3VA2 IEC frame 160 breaking capacity class E Icu=200 kA @ 415 V 3-pole, line protection ETU850, LSI, In=100A overload protection Ir=40A ... 100A short circuit protection Isd=0,6...10xIn, Ii=1,5...12xIn cable connection

Model	
product brand name	SENTRON
product designation	Molded case circuit breaker
design of the product	Line protection
design of the overcurrent release	ETU850
protection function of the overcurrent release	LSI
number of poles	3
General technical data	
insulation voltage / rated value	800 V
operating voltage / at AC / rated value	690 V
power loss [W] / maximum	7.7 W
power loss [W] / for rated value of the current / at AC / in hot operating state / per pole	2.57 W
mechanical service life (operating cycles) / typical	25 000
electrical endurance (operating cycles) / at AC-1 / at 380/415 V	14 000
electrical endurance (operating cycles) / at AC-1 / at 690 V	9 800
product feature / for neutral conductors / upgradable/retrofittable / short-circuit and overload proof	Yes
ground-fault monitoring version	Without
product function	
● communication function	Yes
● other measurement function	Yes
Net Weight	2.5 kg
Current	
operational current	
● at 40 °C	100 A
● at 45 °C	100 A
● at 50 °C	100 A
● at 55 °C	100 A
● at 60 °C	100 A
● at 65 °C	100 A
● at 70 °C	100 A
Switching capacity according to IEC 60947	
switching capacity class of the circuit breaker	E
maximum short-circuit current breaking capacity (Icu)	
● at 415 V	200 kA
● at 690 V	85 kA
operating short-circuit current breaking capacity (Ics)	
● at 415 V	200 kA
● at 690 V	65 kA
short-circuit current making capacity (Icm)	

Subject to change without notice
© Copyright Siemens

● at 415 V	440 kA
● at 690 V	187 kA
Adjustable parameters	
product feature / for L-tripping / can be switched on/off	No
adjustable response value setting current (Ir) / of the L-trip / with I2t characteristic	
● minimum	40 A
● maximum	100 A
adjustable response value delay time (tr) / for L-tripping / with I2t characteristic	
● minimum	0.5 s
● maximum	25 s
adjustable response value setting current (Isd) / of S-trip / with I0t characteristic	
● minimum	60 A
● maximum	1 000 A
adjustable response value setting current (Isd) / of S-trip / with I2t characteristic	
● minimum	60 A
● maximum	1 000 A
adjustable response value delay time (tsd) / for S-tripping / with I0t characteristic	
● minimum	0.05 s
● maximum	0.5 s
adjustable response value delay time (tsd) / for S-tripping / with I2t characteristic	
● minimum	0.05 s
● maximum	0.5 s
adjustable response value setting current (Ii) / for I-tripping	
● minimum	150 A
● maximum	1 200 A
adjustable setting current (InN) / for N-tripping	
● minimum	20 A
● maximum	160 A
design of the N-conductor protection	adjustable OFF; 20% to 160%
product function / grounding protection	No
Mechanical Design	
product component	
● undervoltage release	No
● voltage trigger	No
● trip indicator	No
height [in]	7.13 in
height	181 mm
width [in]	4.13 in
type of connectable conductor cross-sections / of the round conductor terminal / stranded	1 x (6 - 120 mm²)
width	105 mm
depth [in]	3.39 in
depth	86 mm
Connections	
arrangement of electrical connectors / for main current circuit	Front terminal
type of electrical connection / for main current circuit	double-sided box terminal
design of the surface / of the connections / on the top of the switch (N, 1, 3, 5)	tin
design of the surface / of the connections / on the bottom of the switch (N, 2, 4, 6)	tin
Auxiliary circuit	
number of CO contacts / for auxiliary contacts	0
Accessories	
product extension / optional / motor drive	Yes
Environmental conditions	
protection class IP / on the front	IP40
ambient temperature	

Subject to change without notice
© Copyright Siemens

● during operation / minimum	-25 °C
● during operation / maximum	70 °C
● during storage / minimum	-40 °C
● during storage / maximum	80 °C
reference code / according to IEC 81346-2	Q

Approvals / Certificates

General Product Approval

CCC	EG-Konf.	UKCA	Confirmation	VDE	Miscellaneous

General Product Approval	EMV	Test Certificates		Marine / Shipping	
EAC	RCM	Miscellaneous	Special Test Certificate	BUREAU VERITAS	DNV

Marine / Shipping	other			Dangerous Good	Environment
CCS (China Classification Society)	Miscellaneous	Confirmation	Miscellaneous	Transport Information	EPD Typ II/III (with life cylce assessment)

Environment

Environmental Confirmations

Further information

Siemens has decided to exit the Russian market (see here).
https://press.siemens.com/global/en/pressrelease/siemens-wind-down-russian-business
Siemens is working on the renewal of the current EAC certificates.
Please contact your local Siemens office on the status of validity of the EAC certification if you intend to import or offer to supply these products to an EAC relevant market (other than the sanctioned EAEU member states Russia or Belarus).
Information on the packaging
https://support.industry.siemens.com/cs/ww/en/view/109813875
Information- and Downloadcenter (Catalogs, Brochures,…)
http://www.siemens.com/lowvoltage/catalogs
Industry Mall (Online ordering system)
https://mall.industry.siemens.com/mall/en/en/Catalog/product?mlfb=3VA2110-0KP36-0AA0
Service&Support (Manuals, Certificates, Characteristics, FAQs,...)
https://support.industry.siemens.com/cs/ww/en/ps/3VA2110-0KP36-0AA0
Image database (product images, 2D dimension drawings, 3D models, device circuit diagrams, ...)
http://www.automation.siemens.com/bilddb/cax_en.aspx?mlfb=3VA2110-0KP36-0AA0
CAx-Online-Generator
http://www.siemens.com/cax
Tender specifications
http://www.siemens.com/specifications

Subject to change without notice
© Copyright Siemens

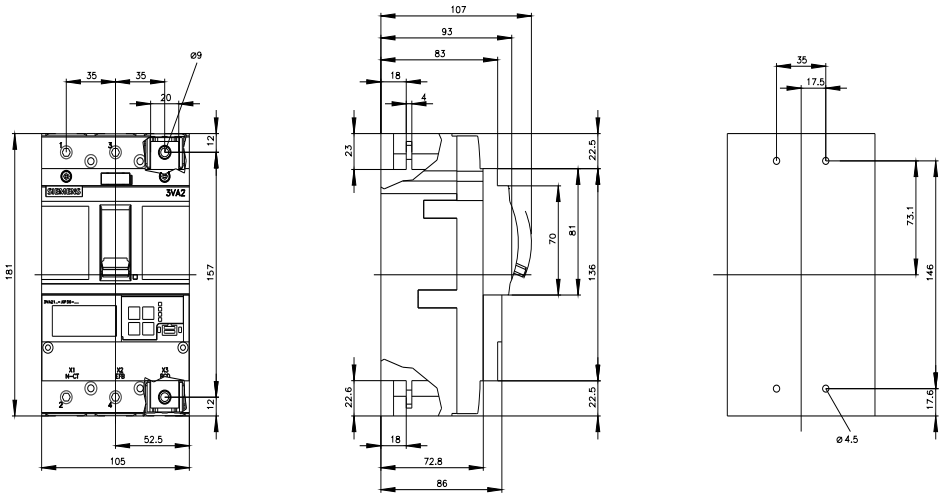

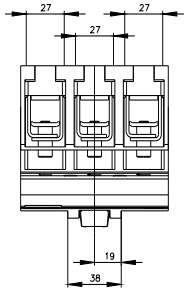

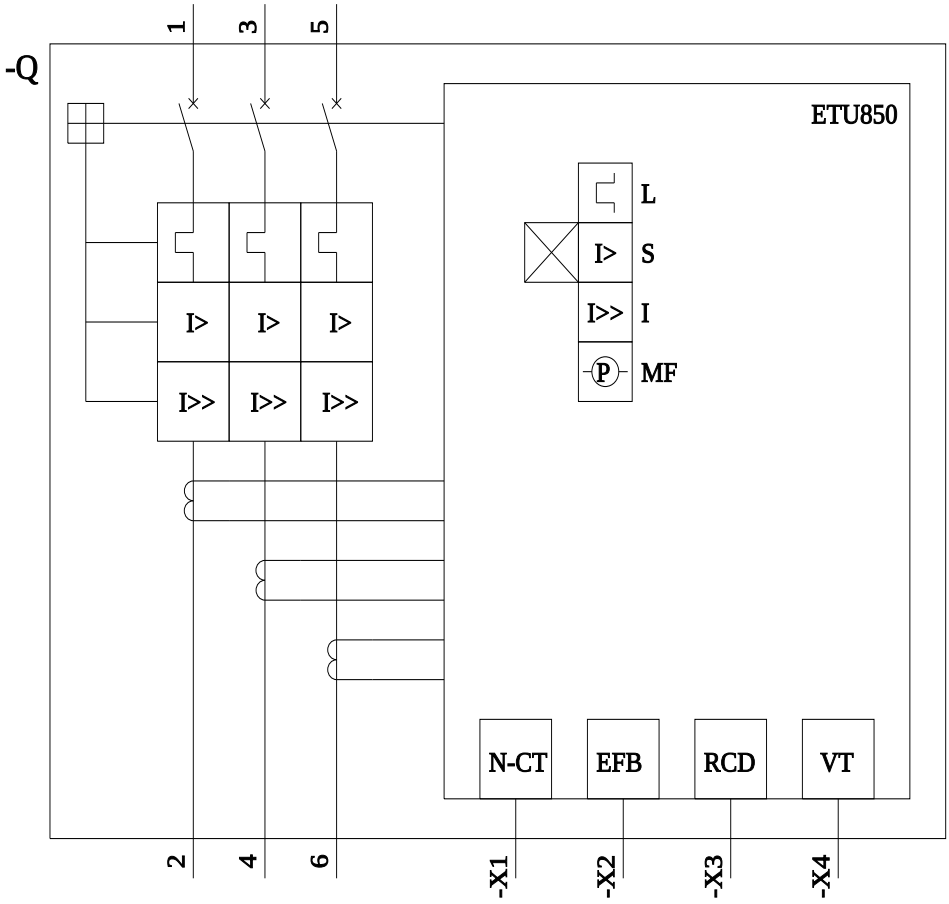

last modified: 8/14/2023

Subject to change without notice
© Copyright Siemens

Subject to change without notice
© Copyright Siemens

Subject to change without notice
© Copyright Siemens