SIEMENS

Data sheet 3RS2600-2BA30

Figure similar

Temperature monitoring relay with display for resistance temperature sensors and thermocouples, 24 V AC/DC, Width 22.5 mm, 2 change-over contacts, Spring-type terminal (push-in)

product brand name	SIRIUS
product designation	Temperature monitoring relay
design of the product	Digital device, 1 sensor, 2 threshold values
product type designation	3RS2
General technical data	
product function	temperature monitoring
display version LED	No
insulation voltage for overvoltage category III according to IEC 60664 with degree of pollution 3 rated value	300 V
test voltage for isolation test	4 kV
degree of pollution	3
protection class IP	20
shock resistance according to IEC 60068-2-27	11g / 15 ms
switching behavior	monostable
mechanical service life (operating cycles) typical	10 000 000
electrical endurance (operating cycles) at AC-15 at 230 V typical	100 000
thermal current of the switching element with contacts maximum	5 A
certificate of suitability relating to ATEX	Yes, with sensor extension module 3RS29
reference code according to IEC 81346-2	K
influence of the surrounding temperature	0.05% per K deviation from T20
measurable temperature	
● initial value	-99 °C
● full-scale value	1 800 °C
measurable Fahrenheit temperature	
● initial value	-146 °F
● full-scale value	3 276 °F
Substance Prohibitance (Date)	05/01/2012
SVHC substance name	Blei - 7439-92-1 Bleimonoxid (Bleioxid) - 1317-36-8 2-Methyl-1-(4-methylthiophenyl)-2-morpho - 71868-10-5
product function	
● error memory	Yes
● external reset	Yes
design of the sensor connectable	Resistance sensors: Pt100, Pt1000, KTY83-110, KTY84, NTC Thermocouples: Type J, K, T, E, N, S, R, B
measurable temperature with KTY-sensor maximum	300 °C
sensor current with KTY-sensor	0.33 mA
Control circuit/ Control	
type of voltage of the control supply voltage	AC/DC

Subject to change without notice
© Copyright Siemens

control supply voltage at AC	
● at 50 Hz rated value	24 ... 24 V
● at 60 Hz rated value	24 ... 24 V
control supply voltage 1 at AC	
● at 50 Hz rated value	24 V
● at 50 Hz	24 ... 24 V
● at 60 Hz rated value	24 V
● at 60 Hz	24 ... 24 V
control supply voltage 2 at AC	
● at 50 Hz rated value	24 V
● at 60 Hz rated value	24 V
control supply voltage at DC rated value	24 ... 24 V
control supply voltage 1	
● at DC rated value	24 V
● at DC	24 ... 24 V
operating range factor control supply voltage rated value at DC	
● initial value	0.85
● full-scale value	1.1
operating range factor control supply voltage rated value at AC at 50 Hz	
● initial value	0.85
● full-scale value	1.1
operating range factor control supply voltage rated value at AC at 60 Hz	
● initial value	0.85
● full-scale value	1.1
supply voltage frequency for auxiliary and control circuit	50 ... 60 Hz
number of measuring circuits	1
buffering time in the event of power failure minimum	20 ms
Precision	
relative metering precision	1 %
Short-circuit protection	
design of the fuse link	
● for short-circuit protection of the NO contacts of the relay outputs required	gL/gG: 6 A or MCB type C: 1 A
● for short circuit protection of the NC contacts of the relay outputs required	gL/gG: 6 A or MCB type C: 1 A
design of the fuse link	
● for short-circuit protection of the NO contacts of the relay outputs safety-related required	gL/gG: 2 A or MCB type C: 1 A
● for short circuit protection of the NC contacts of the relay outputs safety-related required	gL/gG: 2 A or MCB type C: 1 A
Communication/ Protocol	
protocol is supported IO-Link protocol	No
Auxiliary circuit	
material of switching contacts	AgSnO2
number of NC contacts for auxiliary contacts	0
number of NO contacts for auxiliary contacts	0
number of CO contacts for auxiliary contacts	2
operational current of auxiliary contacts at DC-13	
● at 24 V	1 A
● at 125 V	0.2 A
● at 250 V	0.1 A
contact reliability of auxiliary contacts	one incorrect switching operation of 100 million switching operations (17 V, 5 mA)
contact rating of auxiliary contacts according to UL	R300 / B300
operating frequency rated value	50 ... 60 Hz
ampacity of the output relay at AC-15 at 250 V at 50/60 Hz	3 A
ampacity of the output relay at DC-13	
● at 24 V	1 A
● at 125 V	0.2 A
continuous current of the DIAZED fuse link of the output	6 A

Subject to change without notice
© Copyright Siemens

relay	
continuous current of DIAZED fuse link of the output relay safety-related	2 A
Electromagnetic compatibility	
EMC emitted interference according to IEC 60947-1	Class B
conducted interference	
● due to burst according to IEC 61000-4-4	2 kV (power ports), 1 kV (signal ports)
● due to conductor-earth surge according to IEC 61000-4-5	2 kV (line to ground)
● due to conductor-conductor surge according to IEC 61000-4-5	1 kV (line to line)
field-based interference according to IEC 61000-4-3	10 V/m
electrostatic discharge according to IEC 61000-4-2	6 kV contact discharge / 8 kV air discharge
Galvanic isolation	
design of the electrical isolation	galvanic isolation
galvanic isolation	
● between input and output	Yes
● between the outputs	Yes
● between the voltage supply and other circuits	No
Safety related data	
SIL Claim Limit (subsystem) according to EN 62061	1
performance level (PL) according to EN ISO 13849-1	c
category according to EN ISO 13849-1	1
Safe failure fraction (SFF)	66 %
hardware fault tolerance according to IEC 61508	0
T1 value for proof test interval or service life according to IEC 61508	20 a
Connections/ Terminals	
product component removable terminal for auxiliary and control circuit	Yes
type of electrical connection	spring-loaded terminal (push-in)
● for auxiliary and control circuit	spring-loaded terminals (push-in)
type of connectable conductor cross-sections	
● solid	0.5 ... 4 mm²
● finely stranded with core end processing	0.5 ... 2.5 mm²
● finely stranded without core end processing	0.5 ... 4 mm²
● for AWG cables solid	20 ... 12
● for AWG cables stranded	20 ... 12
connectable conductor cross-section	
● solid	0.5 ... 4 mm²
● finely stranded with core end processing	0.5 ... 2.5 mm²
● finely stranded without core end processing	0.5 ... 4 mm²
AWG number as coded connectable conductor cross section	
● solid	20 ... 12
● stranded	20 ... 12
Installation/ mounting/ dimensions	
mounting position	any
fastening method	screw and snap-on mounting onto 35 mm DIN rail
height	100 mm
width	22.5 mm
depth	90 mm
required spacing	
● with side-by-side mounting	
— forwards	0 mm
— backwards	0 mm
— upwards	0 mm
— downwards	0 mm
— at the side	0 mm
● for grounded parts	
— forwards	0 mm
— backwards	0 mm
— upwards	0 mm

Subject to change without notice
© Copyright Siemens

— at the side	0 mm
— downwards	0 mm
● for live parts	
— forwards	0 mm
— backwards	0 mm
— upwards	0 mm
— downwards	0 mm
— at the side	0 mm

Ambient conditions

installation altitude at height above sea level maximum	2 000 m
ambient temperature	
● during operation	-25 ... +60 °C
● during storage	-40 ... +85 °C
● during transport	-40 ... +85 °C
relative humidity during operation	70 %
explosion protection category for dust	Ex II (2) D [b1] [Ex h] [pyb] [tb] [mb] [kb] [sb] III C Db
explosion protection category for gas	Ex II (2) G [b1] [Ex h] [db] [eb] [pyb] [mb] [ob] [q] [kb] [sb] II C Gb

Approvals Certificates

General Product Approval

UK CA	CCC	Confirmation	CE EG-Konf.	UL	EAC

EMV	Test Certificates	Marine / Shipping	other
RCM	Special Test Certificate	DNV	Confirmation

Further information

Siemens has decided to exit the Russian market (see here).
https://press.siemens.com/global/en/pressrelease/siemens-wind-down-russian-business
Siemens is working on the renewal of the current EAC certificates.
Please contact your local Siemens office on the status of validity of the EAC certification if you intend to import or offer to supply these products to an EAC relevant market (other than the sanctioned EAEU member states Russia or Belarus).
Information on the packaging
https://support.industry.siemens.com/cs/ww/en/view/109813875
Information- and Downloadcenter (Catalogs, Brochures,…)
https://www.siemens.com/ic10
Industry Mall (Online ordering system)
https://mall.industry.siemens.com/mall/en/en/Catalog/product?mlfb=3RS2600-2BA30
Cax online generator
http://support.automation.siemens.com/WW/CAXorder/default.aspx?lang=en&mlfb=3RS2600-2BA30
Service&Support (Manuals, Certificates, Characteristics, FAQs,...)
https://support.industry.siemens.com/cs/ww/en/ps/3RS2600-2BA30
Image database (product images, 2D dimension drawings, 3D models, device circuit diagrams, EPLAN macros, ...)
http://www.automation.siemens.com/bilddb/cax_de.aspx?mlfb=3RS2600-2BA30&lang=en
Characteristic: Derating
https://support.industry.siemens.com/cs/ww/en/ps/3RS2600-2BA30/manual

Subject to change without notice
© Copyright Siemens

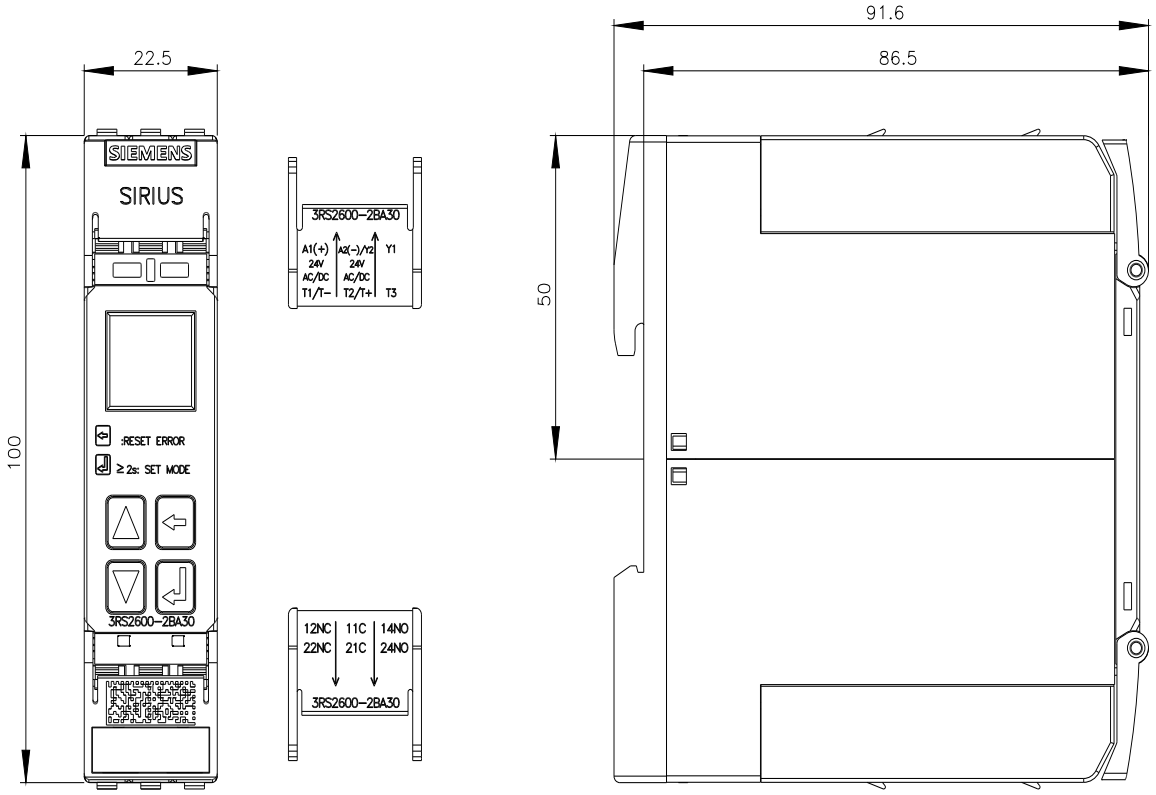

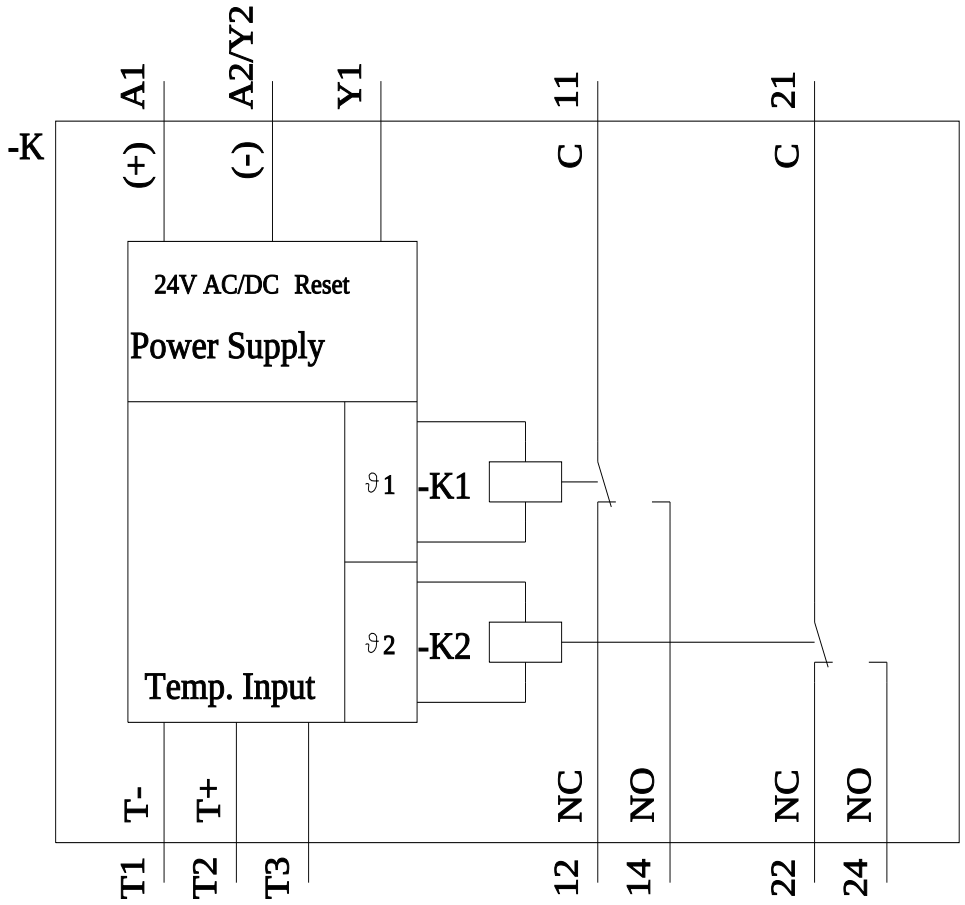

last modified: 8/11/2023

Subject to change without notice
© Copyright Siemens

Subject to change without notice
© Copyright Siemens