SIEMENS

Data sheet 3SE5232-0KD03



Position switch Plastic enclosure according to EN 50047, 31 mm Device connection 1 x (M20 x 1.5) 1 NO/2 NC slow-action contacts Roller plunger, Form C with plastic roller 10 mm

product brand name	SIRIUS
product designation	Mechanical position switches
product type designation	3SE5
manufacturer's article number	
● of the supplied actuator head for position switches	3SE5000-0AD03
● of the supplied switching contacts	3SE5000-0KA00
● of the supplied empty enclosure with cover	3SE5232-0AC05
suitability for use safety switch	Yes
General technical data	
product function positive opening	Yes
insulation voltage rated value	400 V
degree of pollution	class 3
surge voltage resistance rated value	6 kV
protection class IP	IP65
shock resistance	
● **according to IEC 60068-2-27**	30g / 11 ms
mechanical service life (operating cycles) typical	
●	15 000 000
electrical endurance (operating cycles) at AC-15 at 230 V typical	100 000
thermal current	10 A
material of the enclosure of the switch head	plastic
reference code according to IEC 81346-2	B
continuous current of the C characteristic MCB	1 A; for a short-circuit current smaller than 400 A
continuous current of the quick DIAZED fuse link	10 A; for a short-circuit current smaller than 400 A
continuous current of the DIAZED fuse link gG	6 A
active principle	mechanical
repeat accuracy	0.05 mm
Substance Prohibitance (Date)	07/01/2006
SVHC substance name	Imidazolidin-2-thion - 96-45-7
minimum actuating force in directions of actuation	20 N
length of the sensor	86 mm
width of the sensor	31 mm
Ambient conditions	
ambient temperature	
● during operation	-25 ... +85 °C
● during storage	-40 ... +90 °C
explosion protection category for dust	none
design of the switching contact	mechanical
operating frequency rated value	50 ... 60 Hz

Subject to change without notice
© Copyright Siemens

number of NC contacts for auxiliary contacts	2
number of NO contacts for auxiliary contacts	1
operational current at AC-15	
● at 24 V rated value	6 A
● at 120 V rated value	6 A
● at 240 V rated value	6 A
● at 400 V rated value	4 A
operational current at DC-13	
● at 24 V rated value	3 A
● at 125 V rated value	0.55 A
● at 250 V rated value	0.27 A
● at 400 V rated value	0.12 A
Enclosure	
design of the housing	block, narrow
material of the enclosure	plastic
coating of the enclosure	Other types
design of the housing according to standard	Yes
Drive Head	
design of the actuating element	Roller plunger, plastic roller
standard-compliant actuator head	EN 50047, design C
shape of the switch head	roller
design of the switching function	positive opening
circuit principle	slow-action contacts
number of switching contacts safety-related	2
cable entry type	1x (M20 x 1.5)
Installation/ mounting/ dimensions	
mounting position	any
fastening method	screw fixing
Connections/ Terminals	
type of electrical connection	screw-type terminals
type of connectable conductor cross-sections	
● solid	1x (0.5 ... 1.5 mm²), 2x (0.5 ... 0.75 mm²)
● finely stranded with core end processing	1x (0.5 ... 1.5 mm²), 2x (0.5 ... 0.75 mm²)
● for AWG cables solid	1x (20 ... 16), 2x (20 ... 18)
● for AWG cables stranded	1x (20 ... 16), 2x (20 ... 18)
design of the interface for safety-related communication	without
Communication/ Protocol	
design of the interface	without
Approvals Certificates	
General Product Approval	

Confirmation

General Product Approval	Functional Saftey	Test Certificates	other
		Type Test Certificates/Test Report	Confirmation

Further information

Information on the packaging
https://support.industry.siemens.com/cs/ww/en/view/109813875
Information- and Downloadcenter (Catalogs, Brochures,…)
https://www.siemens.com/ic10
Industry Mall (Online ordering system)
https://mall.industry.siemens.com/mall/en/en/Catalog/product?mlfb=3SE5232-0KD03
Cax online generator

Subject to change without notice
© Copyright Siemens

http://support.automation.siemens.com/WW/CAXorder/default.aspx?lang=en&mlfb=3SE5232-0KD03

Service&Support (Manuals, Certificates, Characteristics, FAQs,...)
https://support.industry.siemens.com/cs/ww/en/ps/3SE5232-0KD03

Image database (product images, 2D dimension drawings, 3D models, device circuit diagrams, EPLAN macros, ...)
http://www.automation.siemens.com/bilddb/cax_de.aspx?mlfb=3SE5232-0KD03&lang=en

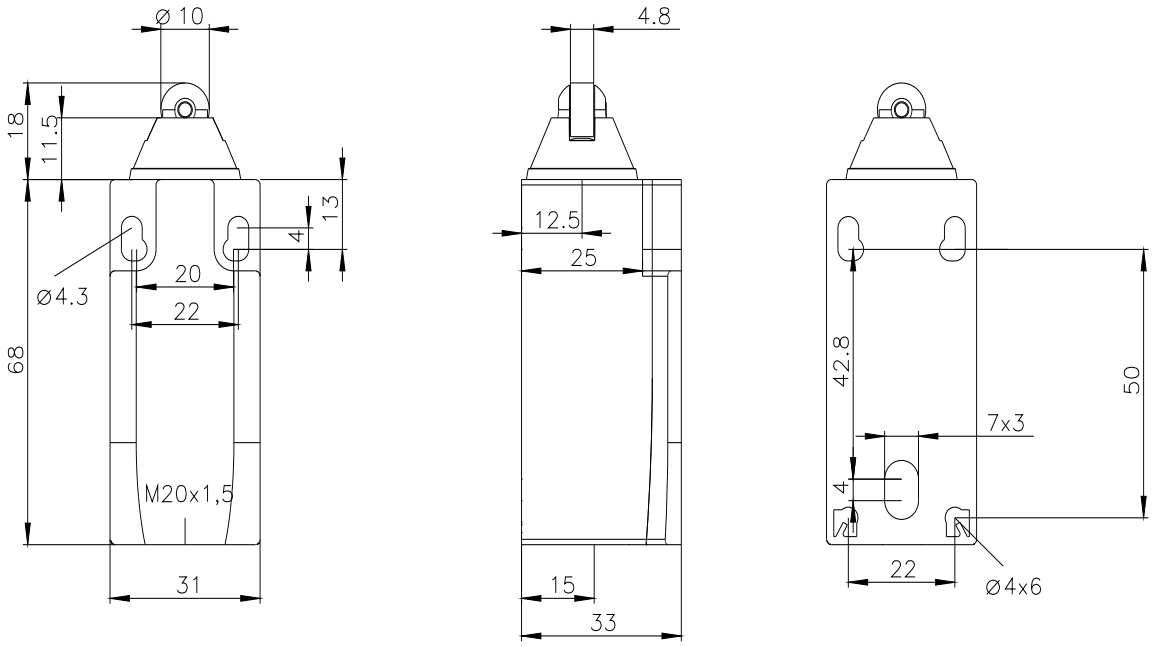

Subject to change without notice
© Copyright Siemens

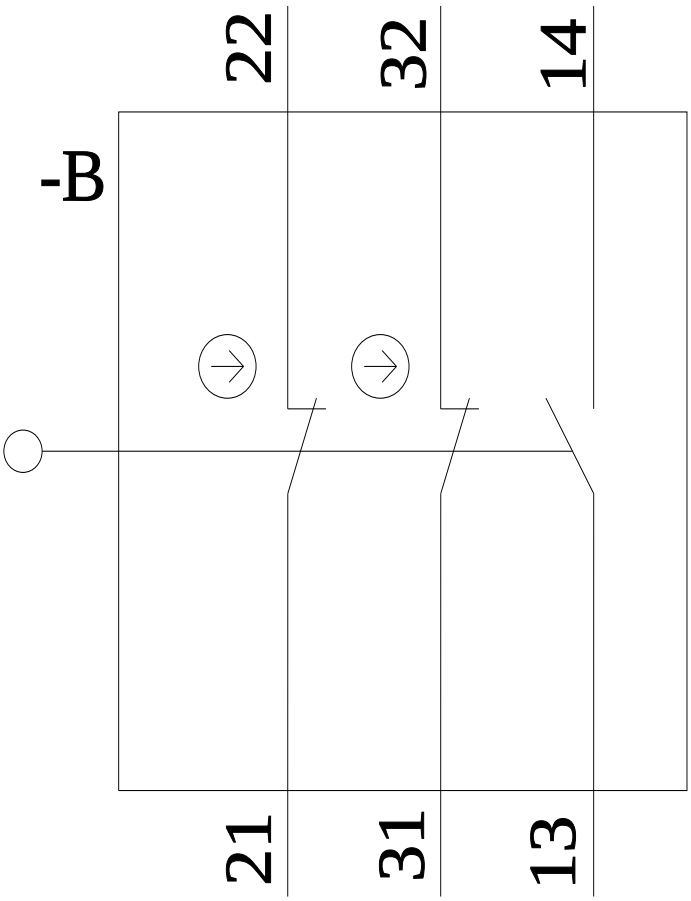

last modified: 9/5/2023

Subject to change without notice
© Copyright Siemens