SIEMENS

Data sheet 3VA2063-8JP36-0AA0

circuit breaker 3VA2 IEC frame 100 breaking capacity class L Icu=150kA @ 415V 3-pole, line protection ETU550, LSI, In=63A overload protection Ir=25A...63A short-circuit protection Isd=0.6..10x In, Ii=1.5..12x In N conductor protection optionally with external current transformer, up to 160% clamp connection

Model	
product brand name	SENTRON
product designation	Molded case circuit breaker
design of the product	Line protection
design of the overcurrent release	ETU550
protection function of the overcurrent release	LSI
number of poles	3
General technical data	
insulation voltage / rated value	800 V
operating voltage / at AC / rated value	690 V
power loss [W] / maximum	3 W
power loss [W] / for rated value of the current / at AC / in hot operating state / per pole	1 W
mechanical service life (operating cycles) / typical	25 000
electrical endurance (operating cycles) / at AC-1 / at 380/415 V	15 000
electrical endurance (operating cycles) / at AC-1 / at 690 V	10 500
product feature / for neutral conductors / upgradable/retrofittable / short-circuit and overload proof	Yes
ground-fault monitoring version	Without
product function	
● communication function	Yes
● other measurement function	No
Net Weight	2.5 kg
Current	
operational current	
● at 40 °C	63 A
● at 45 °C	63 A
● at 50 °C	63 A
● at 55 °C	63 A
● at 60 °C	63 A
● at 65 °C	63 A
● at 70 °C	63 A
Switching capacity according to IEC 60947	
switching capacity class of the circuit breaker	L
maximum short-circuit current breaking capacity (Icu)	
● at 240 V	200 kA
● at 415 V	150 kA
● at 440 V	150 kA
● at 500 V	100 kA
● at 690 V	25 kA
operating short-circuit current breaking capacity (Ics)	

Subject to change without notice
© Copyright Siemens

● at 240 V	200 kA
● at 415 V	150 kA
● at 440 V	150 kA
● at 500 V	100 kA
● at 690 V	18 kA
short-circuit current making capacity (Icm)	
● at 240 V	440 kA
● at 415 V	330 kA
● at 440 V	330 kA
● at 500 V	220 kA
● at 690 V	52.5 kA
Adjustable parameters	
product feature / for L-tripping / can be switched on/off	No
adjustable response value setting current (Ir) / of the L-trip / with I2t characteristic	
● minimum	25 A
● maximum	63 A
adjustable response value delay time (tr) / for L-tripping / with I2t characteristic	
● minimum	0.5 s
● maximum	25 s
adjustable response value setting current (Isd) / of S-trip / with I0t characteristic	
● minimum	38 A
● maximum	630 A
adjustable response value setting current (Isd) / of S-trip / with I2t characteristic	
● minimum	38 A
● maximum	630 A
adjustable response value delay time (tsd) / for S-tripping / with I0t characteristic	
● minimum	0.05 s
● maximum	0.5 s
adjustable response value delay time (tsd) / for S-tripping / with I2t characteristic	
● minimum	0.05 s
● maximum	0.5 s
adjustable response value setting current (Ii) / for I-tripping	
● minimum	95 A
● maximum	756 A
adjustable setting current (InN) / for N-tripping	
● minimum	25 A
● maximum	101 A
design of the N-conductor protection	adjustable OFF; 40% to 160%
product function / grounding protection	No
Mechanical Design	
product component	
● undervoltage release	No
● voltage trigger	No
● trip indicator	No
height [in]	7.13 in
height	181 mm
width [in]	4.13 in
type of connectable conductor cross-sections / of the round conductor terminal / stranded	1 x (6 - 120 mm²)
width	105 mm
depth [in]	3.39 in
depth	86 mm
Connections	
arrangement of electrical connectors / for main current circuit	Front terminal
type of electrical connection / for main current circuit	double-sided box terminal
design of the surface / of the connections / on the top of the switch (N, 1, 3, 5)	tin

Subject to change without notice
© Copyright Siemens

design of the surface / of the connections / on the bottom of the switch (N, 2, 4, 6)	tin
Auxiliary circuit	
number of CO contacts / for auxiliary contacts	0
Accessories	
product extension / optional / motor drive	Yes
Environmental conditions	
protection class IP / on the front	IP40
ambient temperature	
● during operation / minimum	-25 °C
● during operation / maximum	70 °C
● during storage / minimum	-40 °C
● during storage / maximum	80 °C
Certificates	
reference code / according to IEC 81346-2	Q

General Product Approval					EMC
Confirmation	CCC	VDE	Miscellaneous	EAC	RCM

Declaration of Conformity		Test Certificates			Marine / Shipping
UKCA	CE EG-Konf.	Miscellaneous	Special Test Certificate	Type Test Certificates/Test Report	ABS

Marine / Shipping					other
BUREAU VERITAS	DNV	Lloyd's Register LRS	RMRS	CCS / China Classification Society	Confirmation

other		Dangerous Good	Environment
Miscellaneous	Miscellaneous	Transport Information	Environmental Confirmations

Further information

Siemens has decided to exit the Russian market (see here).
https://press.siemens.com/global/en/pressrelease/siemens-wind-down-russian-business

Siemens is working on the renewal of the current EAC certificates.
Please contact your local Siemens office on the status of validity of the EAC certification if you intend to import or offer to supply these products to an EAC relevant market (other than the sanctioned EAEU member states Russia or Belarus).

Information on the packaging
https://support.industry.siemens.com/cs/ww/en/view/109813875

Information- and Downloadcenter (Catalogs, Brochures,…)
http://www.siemens.com/lowvoltage/catalogs

Industry Mall (Online ordering system)
https://mall.industry.siemens.com/mall/en/en/Catalog/product?mlfb=3VA2063-8JP36-0AA0

Service&Support (Manuals, Certificates, Characteristics, FAQs,...)
https://support.industry.siemens.com/cs/ww/en/ps/3VA2063-8JP36-0AA0

Image database (product images, 2D dimension drawings, 3D models, device circuit diagrams, ...)
http://www.automation.siemens.com/bilddb/cax_en.aspx?mlfb=3VA2063-8JP36-0AA0

CAx-Online-Generator
http://www.siemens.com/cax

Tender specifications
http://www.siemens.com/specifications

Subject to change without notice
© Copyright Siemens

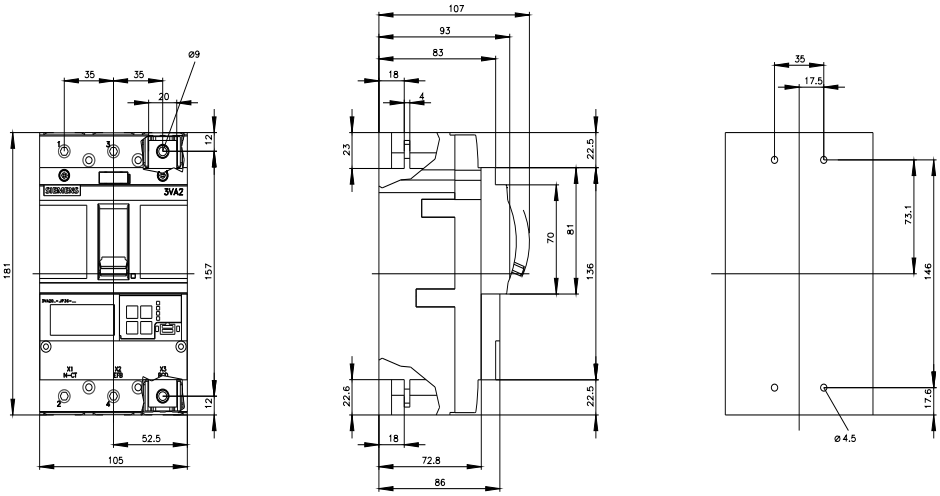

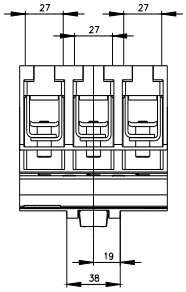

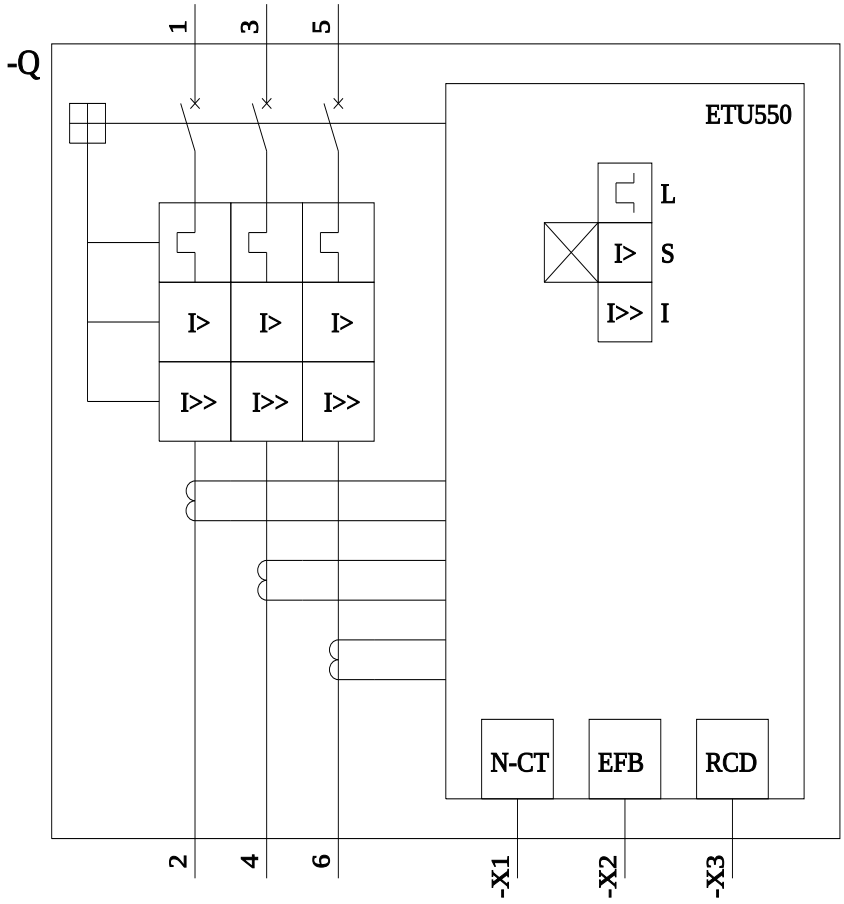

last modified: 8/14/2023

Subject to change without notice
© Copyright Siemens

Subject to change without notice
© Copyright Siemens

Subject to change without notice
© Copyright Siemens