SIEMENS

Data sheet 3RS2500-1AW30

Temperature monitoring relay Pt100, Thermocouple J, K 1 threshold value, Width 22.5 mm Overshoot and undershoot 24 - 240 V AC/DC 1 change-over contact, quiescent current principle screw terminal

product brand name	SIRIUS
product designation	Temperature monitoring relay
design of the product	Analog multifunction device, 1 sensor, 1 threshold value
product type designation	3RS2
General technical data	
product function	temperature monitoring
display version LED	Yes
insulation voltage for overvoltage category III according to IEC 60664 with degree of pollution 3 rated value	300 V
test voltage for isolation test	4 kV
degree of pollution	3
protection class IP	20
shock resistance according to IEC 60068-2-27	11g / 15 ms
mechanical service life (operating cycles) typical	10 000 000
electrical endurance (operating cycles) at AC-15 at 230 V typical	100 000
thermal current of the switching element with contacts maximum	5 A
reference code according to IEC 81346-2	K
influence of the surrounding temperature	0.05% per K deviation from T20
measurable temperature	
● initial value	-50 °C
● full-scale value	1 000 °C
Substance Prohibitance (Date)	05/01/2012
SVHC substance name	Lead - 7439-92-1 Lead monoxide (lead oxide) - 1317-36-8
product function	
● error memory	No
● external reset	No
design of the sensor connectable	Resistance sensors: Pt100 Thermocouples: Type J, K
Control circuit/ Control	
type of voltage of the control supply voltage	AC/DC
control supply voltage at AC	
● at 50 Hz rated value	24 ... 240 V
● at 60 Hz rated value	24 ... 240 V
control supply voltage 1 at AC	
● at 50 Hz rated value	24 V
● at 50 Hz	24 ... 240 V
● at 60 Hz rated value	24 V
● at 60 Hz	24 ... 240 V
control supply voltage 2 at AC	

Subject to change without notice
© Copyright Siemens

● at 50 Hz rated value	24 V
● at 60 Hz rated value	24 V
control supply voltage at DC rated value	24 ... 240 V
control supply voltage 1 at DC	
● rated value	24 V
●	24 ... 240 V
operating range factor control supply voltage rated value at DC	
● initial value	0.85
● full-scale value	1.1
operating range factor control supply voltage rated value at AC at 50 Hz	
● initial value	0.85
● full-scale value	1.1
operating range factor control supply voltage rated value at AC at 60 Hz	
● initial value	0.85
● full-scale value	1.1
supply voltage frequency for auxiliary and control circuit	50 ... 60 Hz
number of measuring circuits	1
buffering time in the event of power failure minimum	20 ms
Precision	
relative metering precision	5 %
Short-circuit protection	
design of the fuse link	
● for short-circuit protection of the NO contacts of the relay outputs required	gL/gG: 6 A or MCB type C: 1 A
● for short circuit protection of the NC contacts of the relay outputs required	gL/gG: 6 A or MCB type C: 1 A
design of the fuse link	
● for short-circuit protection of the NO contacts of the relay outputs safety-related required	gL/gG: 2 A or MCB type C: 1 A
● for short circuit protection of the NC contacts of the relay outputs safety-related required	gL/gG: 2 A or MCB type C: 1 A
Communication/ Protocol	
protocol is supported IO-Link protocol	No
Auxiliary circuit	
material of switching contacts	AgSnO2
number of NC contacts for auxiliary contacts	0
number of NO contacts for auxiliary contacts	0
number of CO contacts for auxiliary contacts	1
operational current of auxiliary contacts at DC-13	
● at 24 V	1 A
● at 125 V	0.2 A
● at 250 V	0.1 A
contact reliability of auxiliary contacts	one incorrect switching operation of 100 million switching operations (17 V, 5 mA)
contact rating of auxiliary contacts according to UL	R300 / B300
operating frequency rated value	50 ... 60 Hz
ampacity of the output relay at AC-15 at 250 V at 50/60 Hz	3 A
ampacity of the output relay at DC-13	
● at 24 V	1 A
● at 125 V	0.2 A
continuous current of the DIAZED fuse link of the output relay	6 A
continuous current of DIAZED fuse link of the output relay safety-related	2 A
Electromagnetic compatibility	
EMC emitted interference according to IEC 60947-1	Class B
conducted interference	
● due to burst according to IEC 61000-4-4	2 kV (power ports), 1 kV (signal ports)
● due to conductor-earth surge according to IEC 61000-4-5	2 kV (line to ground)
● due to conductor-conductor surge according to IEC 61000-4-5	1 kV (line to line)

Subject to change without notice
© Copyright Siemens

field-based interference according to IEC 61000-4-3	10 V/m
electrostatic discharge according to IEC 61000-4-2	6 kV contact discharge / 8 kV air discharge
Galvanic isolation	
design of the electrical isolation	galvanic isolation
galvanic isolation	
● between input and output	Yes
● between the voltage supply and other circuits	Yes
Connections/ Terminals	
product component removable terminal for auxiliary and control circuit	Yes
type of electrical connection	screw-type terminals
● for auxiliary and control circuit	screw-type terminals
type of connectable conductor cross-sections	
● solid	1x (0.5 ... 4.0 mm²), 2x (0.5 ... 2.5 mm²)
● finely stranded with core end processing	1x (0.5 ... 4 mm²), 2x (0.5 ... 2.5 mm²)
● for AWG cables solid	1x (20 ... 12), 2x (20 ... 14)
connectable conductor cross-section	
● solid	0.5 ... 4 mm²
● finely stranded with core end processing	0.5 ... 4 mm²
AWG number as coded connectable conductor cross section	
● solid	20 ... 12
● stranded	20 ... 12
tightening torque with screw-type terminals	0.6 ... 0.8 N·m
Installation/ mounting/ dimensions	
mounting position	any
fastening method	screw and snap-on mounting onto 35 mm DIN rail
height	100 mm
width	22.5 mm
depth	90 mm
required spacing	
● with side-by-side mounting	
— forwards	0 mm
— backwards	0 mm
— upwards	0 mm
— downwards	0 mm
— at the side	0 mm
● for grounded parts	
— forwards	0 mm
— backwards	0 mm
— upwards	0 mm
— at the side	0 mm
— downwards	0 mm
● for live parts	
— forwards	0 mm
— backwards	0 mm
— upwards	0 mm
— downwards	0 mm
— at the side	0 mm
Ambient conditions	
installation altitude at height above sea level maximum	2 000 m
ambient temperature	
● during operation	-25 ... +60 °C
● during storage	-40 ... +85 °C
● during transport	-40 ... +85 °C
relative humidity during operation maximum	70 %
Approvals Certificates	
General Product Approval	

Subject to change without notice
© Copyright Siemens

Confirmation

EMV	Marine / Shipping	other
KC		Confirmation

Further information

Information on the packaging
https://support.industry.siemens.com/cs/ww/en/view/109813875
Information- and Downloadcenter (Catalogs, Brochures,…)
https://www.siemens.com/ic10
Industry Mall (Online ordering system)
https://mall.industry.siemens.com/mall/en/en/Catalog/product?mlfb=3RS2500-1AW30
Cax online generator
http://support.automation.siemens.com/WW/CAXorder/default.aspx?lang=en&mlfb=3RS2500-1AW30
Service&Support (Manuals, Certificates, Characteristics, FAQs,...)
https://support.industry.siemens.com/cs/ww/en/ps/3RS2500-1AW30
Image database (product images, 2D dimension drawings, 3D models, device circuit diagrams, EPLAN macros, ...)
http://www.automation.siemens.com/bilddb/cax_de.aspx?mlfb=3RS2500-1AW30&lang=en
Characteristic: Derating
https://support.industry.siemens.com/cs/ww/en/ps/3RS2500-1AW30/manual

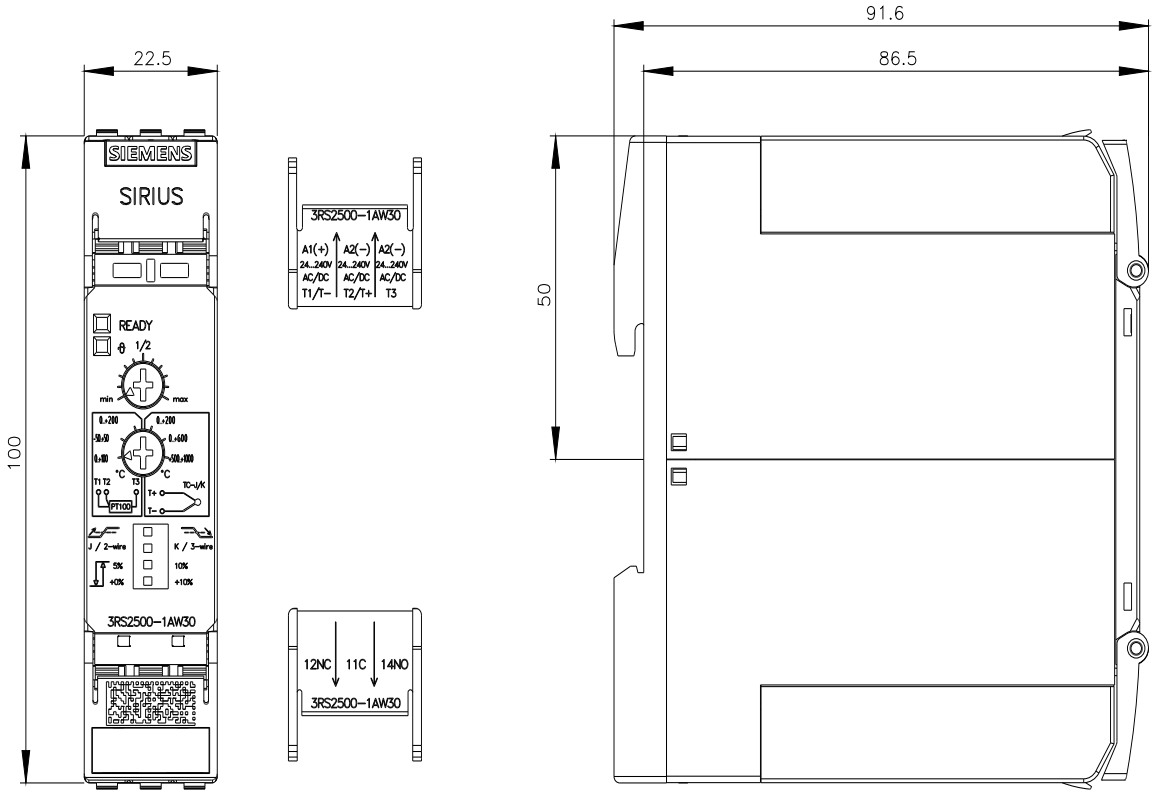

Subject to change without notice
© Copyright Siemens

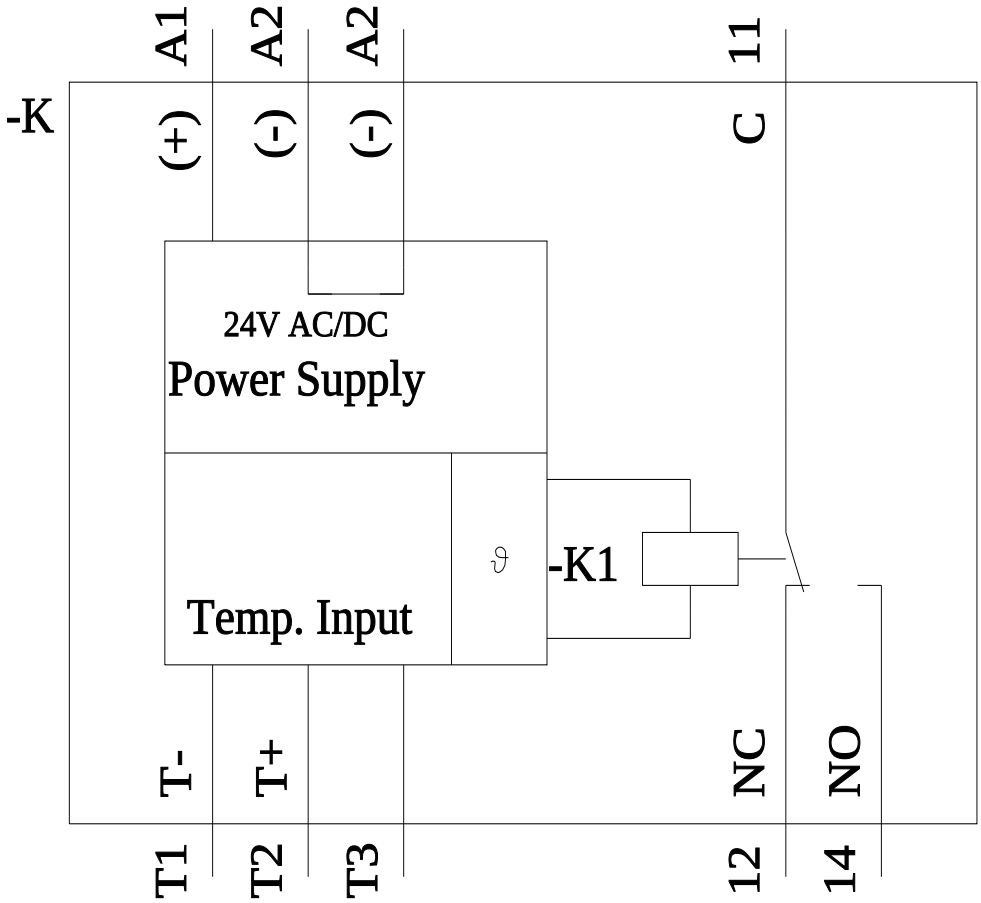

last modified: 3/11/2024

Subject to change without notice
© Copyright Siemens