SIEMENS

Data sheet 3VA1216-5FF42-0AA0

circuit breaker 3VA1 IEC frame 250 breaking capacity class M Icu=55kA @ 415V 4-pole, line protection TM240, ATAM, In=160A overload protection Ir=112A...160A short-circuit protection Ii=5...10 x In N conductor protection 50% nut keeper kit

Model	
product brand name	SENTRON
product designation	Molded case circuit breaker
design of the product	Line protection
design of the overcurrent release	TM240
protection function of the overcurrent release	LI
number of poles	4
General technical data	
insulation voltage / rated value	800 V
operating voltage / at DC / rated value	600 V
operating voltage / at AC / rated value	690 V
power loss [W] / maximum	33 W
power loss [W] / for rated value of the current / at AC / in hot operating state / per pole	11 W
mechanical service life (operating cycles) / typical	20 000
electrical endurance (operating cycles) / at AC-1 / at 380/415 V	8 000
electrical endurance (operating cycles) / at AC-1 / at 690 V	5 400
product feature / for neutral conductors / upgradable/retrofittable / short-circuit and overload proof	No
ground-fault monitoring version	Without
product function	
● communication function	No
● other measurement function	No
Net Weight	2.1 kg
Current	
operational current	
● at 40 °C	160 A
● at 45 °C	160 A
● at 50 °C	160 A
● at 55 °C	156 A
● at 60 °C	151 A
● at 65 °C	147 A
● at 70 °C	142 A
Switching capacity according to IEC 60947	
switching capacity class of the circuit breaker	M
maximum short-circuit current breaking capacity (Icu)	
● at 240 V	85 kA
● at 415 V	55 kA
● at 440 V	36 kA
● at 500 V	15 kA
● at 690 V	10 kA

Subject to change without notice
© Copyright Siemens

operating short-circuit current breaking capacity (Ics)	
● at 240 V	85 kA
● at 415 V	55 kA
● at 440 V	36 kA
● at 500 V	10 kA
● at 690 V	5 kA
short-circuit current making capacity (Icm)	
● at 240 V	187 kA
● at 415 V	121 kA
● at 440 V	75.6 kA
● at 500 V	30 kA
● at 690 V	17 kA
design of short-circuit protection	For switching power values in DC networks, see the 3VA molded case circuit breaker device manual; link to be found under Service & Support in the last chapter
Adjustable parameters	
product feature / for L-tripping / can be switched on/off	No
adjustable response value setting current (Ir) / of the L-trip / with I2t characteristic	
● minimum	112 A
● maximum	160 A
adjustable response value delay time (tr) / for L-tripping / with I2t characteristic	
● minimum	1 s
● maximum	1 s
adjustable response value setting current (Ii) / for I-tripping	
● minimum	800 A
● maximum	1 600 A
adjustable setting current (InN) / for N-tripping	
● minimum	80 A
● maximum	80 A
design of the N-conductor protection	50%
product function / grounding protection	No
Mechanical Design	
product component	
● undervoltage release	No
● voltage trigger	No
● trip indicator	No
height [in]	6.22 in
height	158 mm
width [in]	5.51 in
width	140 mm
depth [in]	2.76 in
depth	70 mm
Connections	
arrangement of electrical connectors / for main current circuit	Front terminal
type of electrical connection / for main current circuit	nut keeper kit on both ends
type of connectable conductor cross-sections / for flat-bar terminal connection / minimum	13 x 1 mm
type of connectable conductor cross-sections / for flat-bar terminal connection / maximum	25 x 8 mm
design of the surface / of the connections / on the top of the switch (N, 1, 3, 5)	Silver
design of the surface / of the connections / on the bottom of the switch (N, 2, 4, 6)	Silver
Auxiliary circuit	
number of CO contacts / for auxiliary contacts	0
Accessories	
product extension / optional / motor drive	Yes
Environmental conditions	
protection class IP / on the front	IP40
ambient temperature	
● during operation / minimum	-25 °C

Subject to change without notice
© Copyright Siemens

● during operation / maximum	70 °C
● during storage / minimum	-40 °C
● during storage / maximum	80 °C

Certificates

reference code / according to IEC 81346-2	Q

General Product Approval

Confirmation | Miscellaneous | KC

EMC

Declaration of Conformity

Test Certificates

Type Test Certificates/Test Report | Special Test Certificate | Miscellaneous

Marine / Shipping

other

Confirmation

other

Miscellaneous | Miscellaneous

Environment

Environmental Confirmations

Further information

Siemens has decided to exit the Russian market (see here).
https://press.siemens.com/global/en/pressrelease/siemens-wind-down-russian-business
Siemens is working on the renewal of the current EAC certificates.
Please contact your local Siemens office on the status of validity of the EAC certification if you intend to import or offer to supply these products to an EAC relevant market (other than the sanctioned EAEU member states Russia or Belarus).
Information on the packaging
https://support.industry.siemens.com/cs/ww/en/view/109813875
Information- and Downloadcenter (Catalogs, Brochures,…)
http://www.siemens.com/lowvoltage/catalogs
Industry Mall (Online ordering system)
https://mall.industry.siemens.com/mall/en/en/Catalog/product?mlfb=3VA1216-5FF42-0AA0
Service&Support (Manuals, Certificates, Characteristics, FAQs,...)
https://support.industry.siemens.com/cs/ww/en/ps/3VA1216-5FF42-0AA0
Image database (product images, 2D dimension drawings, 3D models, device circuit diagrams, ...)
http://www.automation.siemens.com/bilddb/cax_en.aspx?mlfb=3VA1216-5FF42-0AA0
CAx-Online-Generator
http://www.siemens.com/cax
Tender specifications
http://www.siemens.com/specifications

Subject to change without notice
© Copyright Siemens

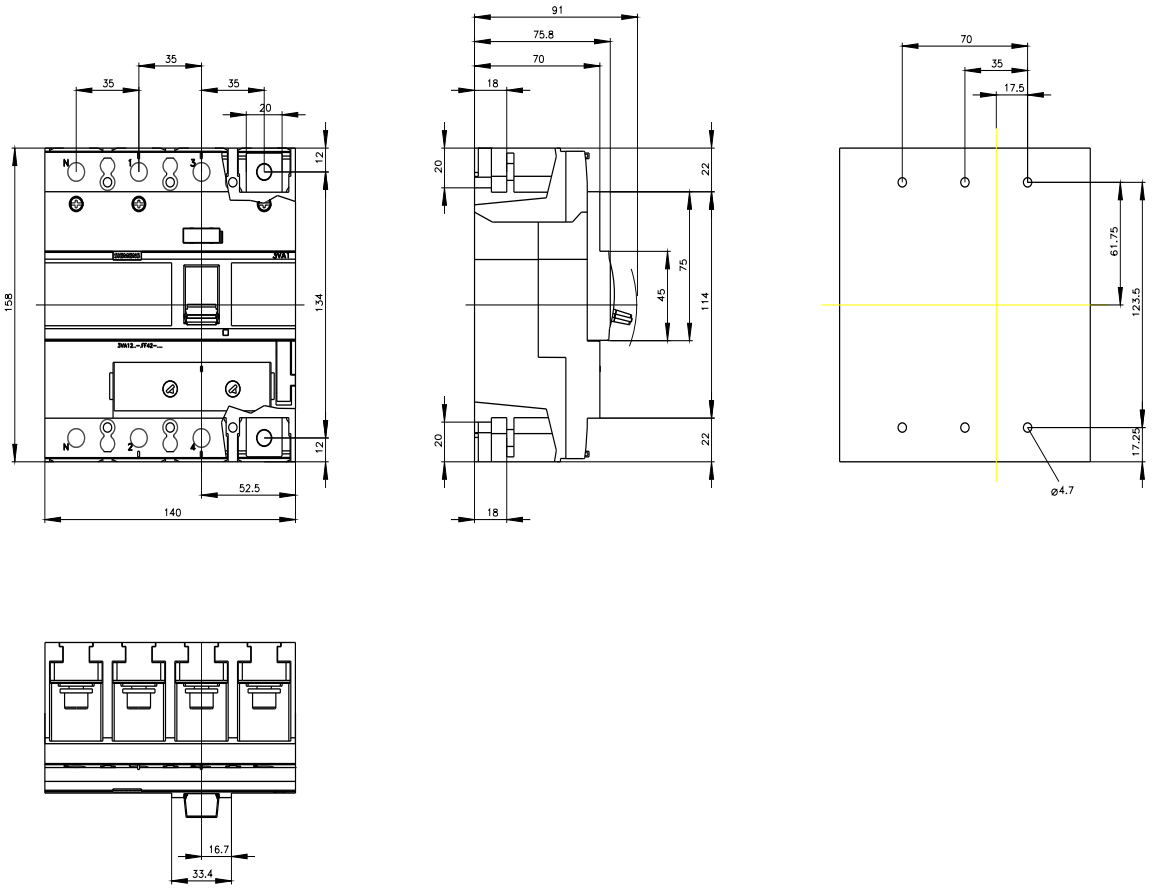

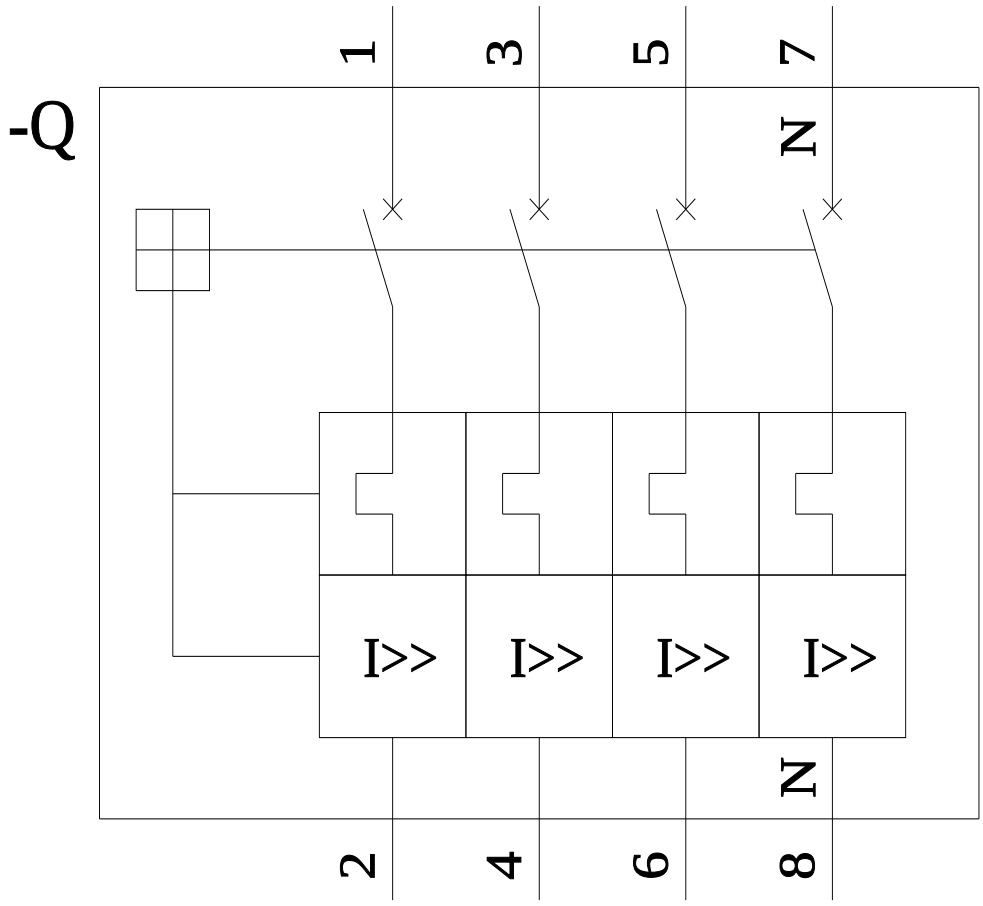

last modified: 10/22/2022

Subject to change without notice
© Copyright Siemens

Subject to change without notice
© Copyright Siemens

Subject to change without notice
© Copyright Siemens