SIEMENS

## Data sheet 3VA2063-6KP36-0AA0

circuit breaker 3VA2 IEC frame 100 breaking capacity class H Icu=85kA @ 415V 3-pole, line protection ETU850, LSI, In=63A overload protection Ir=25A...63A short-circuit protection Isd=0.6..10x In, Ii=1.5..12x In N conductor protection optionally with external current transformer, up to 160% clamp connection

| | |
|---|---|
| **Model** | |
| product brand name | SENTRON |
| product designation | Molded case circuit breaker |
| design of the product | Line protection |
| design of the overcurrent release | ETU850 |
| protection function of the overcurrent release | LSI |
| number of poles | 3 |
| **General technical data** | |
| insulation voltage / rated value | 800 V |
| operating voltage / at AC / rated value | 690 V |
| power loss [W] / maximum | 5.4 W |
| power loss [W] / for rated value of the current / at AC / in hot operating state / per pole | 1.8 W |
| mechanical service life (operating cycles) / typical | 25 000 |
| electrical endurance (operating cycles) / at AC-1 / at 380/415 V | 15 000 |
| electrical endurance (operating cycles) / at AC-1 / at 690 V | 10 500 |
| product feature / for neutral conductors / upgradable/retrofittable / short-circuit and overload proof | Yes |
| ground-fault monitoring version | Without |
| product function | |
| ● communication function | Yes |
| ● other measurement function | Yes |
| Net Weight | 2.5 kg |
| **Current** | |
| operational current | |
| ● at 40 °C | 63 A |
| ● at 45 °C | 63 A |
| ● at 50 °C | 63 A |
| ● at 55 °C | 63 A |
| ● at 60 °C | 63 A |
| ● at 65 °C | 63 A |
| ● at 70 °C | 63 A |
| **Switching capacity according to IEC 60947** | |
| switching capacity class of the circuit breaker | H |
| maximum short-circuit current breaking capacity (Icu) | |
| ● at 240 V | 110 kA |
| ● at 415 V | 85 kA |
| ● at 440 V | 85 kA |
| ● at 500 V | 55 kA |
| ● at 690 V | 2 kA |
| operating short-circuit current breaking capacity (Ics) | |


Subject to change without notice
© Copyright Siemens

| | |
|---|---|
| ● at 240 V | 110 kA |
| ● at 415 V | 85 kA |
| ● at 440 V | 85 kA |
| ● at 500 V | 55 kA |
| ● at 690 V | 2 kA |
| short-circuit current making capacity (Icm) | |
| ● at 240 V | 242 kA |
| ● at 415 V | 187 kA |
| ● at 440 V | 187 kA |
| ● at 500 V | 121 kA |
| ● at 690 V | 3 kA |
| **Adjustable parameters** | |
| product feature / for L-tripping / can be switched on/off | No |
| adjustable response value setting current (Ir) / of the L-trip / with I2t characteristic | |
| ● minimum | 25 A |
| ● maximum | 63 A |
| adjustable response value delay time (tr) / for L-tripping / with I2t characteristic | |
| ● minimum | 0.5 s |
| ● maximum | 25 s |
| adjustable response value setting current (Isd) / of S-trip / with I0t characteristic | |
| ● minimum | 38 A |
| ● maximum | 630 A |
| adjustable response value setting current (Isd) / of S-trip / with I2t characteristic | |
| ● minimum | 38 A |
| ● maximum | 630 A |
| adjustable response value delay time (tsd) / for S-tripping / with I0t characteristic | |
| ● minimum | 0.05 s |
| ● maximum | 0.5 s |
| adjustable response value delay time (tsd) / for S-tripping / with I2t characteristic | |
| ● minimum | 0.05 s |
| ● maximum | 0.5 s |
| adjustable response value setting current (Ii) / for I-tripping | |
| ● minimum | 95 A |
| ● maximum | 756 A |
| adjustable setting current (InN) / for N-tripping | |
| ● minimum | 25 A |
| ● maximum | 101 A |
| design of the N-conductor protection | adjustable OFF; 40% to 160% |
| product function / grounding protection | No |
| **Mechanical Design** | |
| product component | |
| ● undervoltage release | No |
| ● voltage trigger | No |
| ● trip indicator | No |
| height [in] | 7.13 in |
| height | 181 mm |
| width [in] | 4.13 in |
| type of connectable conductor cross-sections / of the round conductor terminal / stranded | 1 x (6 - 120 mm²) |
| width | 105 mm |
| depth [in] | 3.39 in |
| depth | 86 mm |
| **Connections** | |
| arrangement of electrical connectors / for main current circuit | Front terminal |
| type of electrical connection / for main current circuit | double-sided box terminal |
| design of the surface / of the connections / on the top of the switch (N, 1, 3, 5) | tin |


Subject to change without notice
© Copyright Siemens

| | |
|---|---|
| design of the surface / of the connections / on the bottom of the switch (N, 2, 4, 6) | tin |
| **Auxiliary circuit** | |
| number of CO contacts / for auxiliary contacts | 0 |
| **Accessories** | |
| product extension / optional / motor drive | Yes |
| **Environmental conditions** | |
| protection class IP / on the front | IP40 |
| ambient temperature | |
| • during operation / minimum | -25 °C |
| • during operation / maximum | 70 °C |
| • during storage / minimum | -40 °C |
| • during storage / maximum | 80 °C |
| reference code / according to IEC 81346-2 | Q |

## Approvals / Certificates

### General Product Approval

| | | | | | |
|---|---|---|---|---|---|
| EG-Konf. | UK CA | Confirmation | CCC | VDE | Miscellaneous |

| General Product Approval | EMV | Test Certificates | | | Marine / Shipping |
|---|---|---|---|---|---|
| EAC | RCM | Miscellaneous | Type Test Certificates/Test Report | Special Test Certificate | ABS |

| Marine / Shipping | | | | | other |
|---|---|---|---|---|---|
| BUREAU VERITAS | DNV | LRS | RMRS | CCS (China Classification Society) | Miscellaneous |

| other | | Dangerous Good | Environment |
|---|---|---|---|
| Confirmation | Miscellaneous | Transport Information | Environmental Confirmations |

## Further information

**Siemens has decided to exit the Russian market (see here).**
https://press.siemens.com/global/en/pressrelease/siemens-wind-down-russian-business
**Siemens is working on the renewal of the current EAC certificates.**
Please contact your local Siemens office on the status of validity of the EAC certification if you intend to import or offer to supply these products to an EAC relevant market (other than the sanctioned EAEU member states Russia or Belarus).
**Information on the packaging**
https://support.industry.siemens.com/cs/ww/en/view/109813875
**Information- and Downloadcenter (Catalogs, Brochures,…)**
http://www.siemens.com/lowvoltage/catalogs
**Industry Mall (Online ordering system)**
https://mall.industry.siemens.com/mall/en/en/Catalog/product?mlfb=3VA2063-6KP36-0AA0
**Service&Support (Manuals, Certificates, Characteristics, FAQs,...)**
https://support.industry.siemens.com/cs/ww/en/ps/3VA2063-6KP36-0AA0
**Image database (product images, 2D dimension drawings, 3D models, device circuit diagrams, ...)**
http://www.automation.siemens.com/bilddb/cax_en.aspx?mlfb=3VA2063-6KP36-0AA0
**CAx-Online-Generator**
http://www.siemens.com/cax
**Tender specifications**
http://www.siemens.com/specifications


Subject to change without notice
© Copyright Siemens

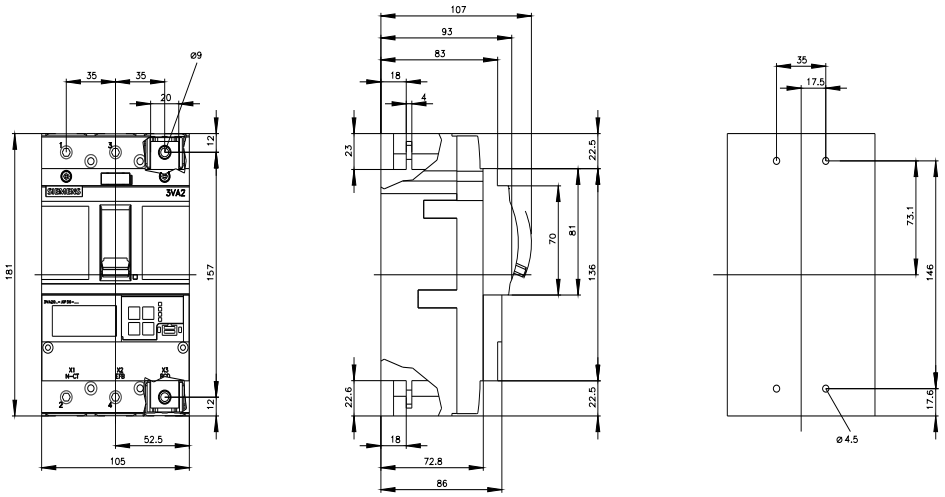


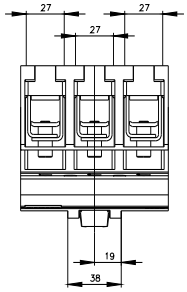


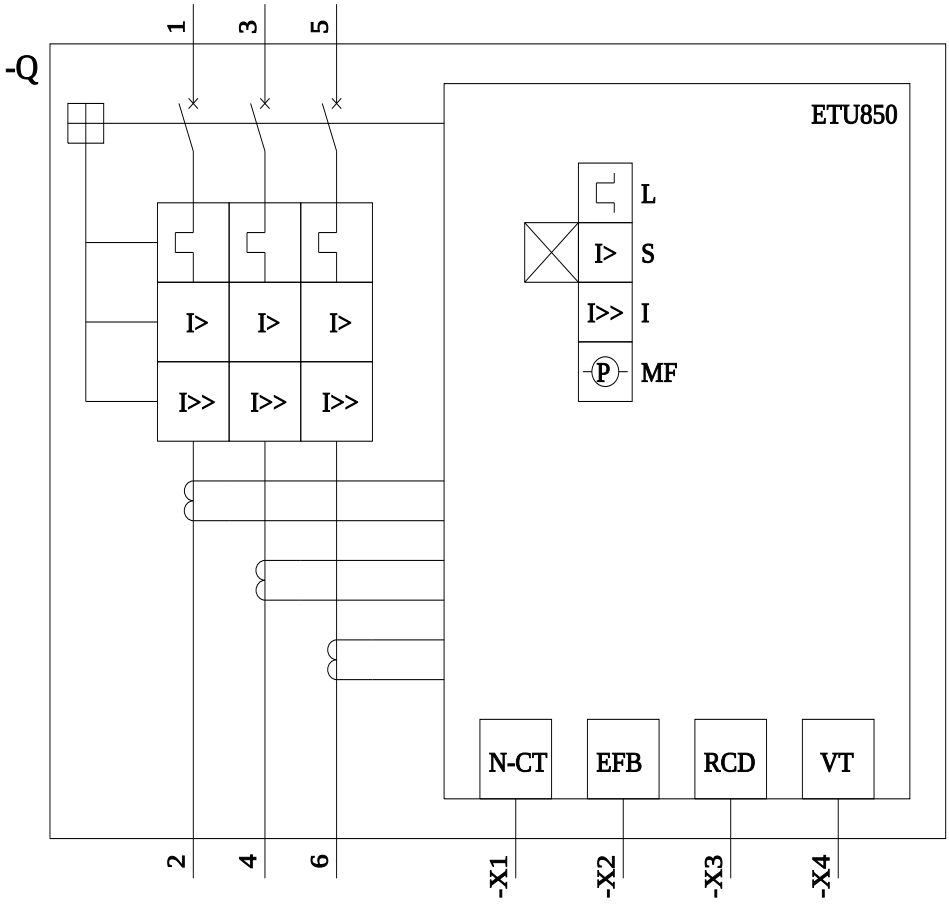


**last modified:** 8/14/2023


Subject to change without notice
© Copyright Siemens

Subject to change without notice
© Copyright Siemens

Subject to change without notice
© Copyright Siemens