SIEMENS

Data sheet 3SE5162-0CH63-1AN4



SIRIUS position switch Metal enclosure XL, 56 mm wide, with twist lever, adjustable length with grid hole, stainless steel lever, stainless steel roller 19 mm, Increased corrosion protection (ICP), connection 3xM20x1.5, gold-plated contacts: 2x(1 NO/1 NC) snap-action contacts, adapter 3SX5100-3B (with toothed lock washer) enclosed

product brand name	SIRIUS
product designation	Mechanical position switches
product type designation	3SE5
manufacturer's article number	
● of the supplied actuator head for position switches	3SE5000-0AH00
● of the supplied operating lever	3SE5000-0AA63
● of the supplied switching contacts	1x 3SE5000-0CA00-1AC1, 1x 3SE5060-0CA00-1AC1 on request
● of the supplied empty enclosure with cover	3SE5162-0AA00-1CA0, on request
accessories included	Adapter 3SX5100-1A
suitability for use safety switch	Yes
General technical data	
product function positive opening	Yes
insulation voltage rated value	400 V
degree of pollution	class 3
surge voltage resistance rated value	6 kV
protection class IP	IP66/IP67
shock resistance	
● **according to IEC 60068-2-27**	30g / 11 ms
mechanical service life (operating cycles) typical	5 000 000
electrical endurance (operating cycles) at AC-15 at 230 V typical	100 000
thermal current	10 A
material of the enclosure of the switch head	plastic
reference code according to IEC 81346-2	B
continuous current of the C characteristic MCB	1 A; for a short-circuit current smaller than 400 A
continuous current of the quick DIAZED fuse link	10 A; for a short-circuit current smaller than 400 A
continuous current of the DIAZED fuse link gG	6 A
active principle	mechanical
repeat accuracy	0.05 mm
Substance Prohibitance (Date)	07/01/2006
SVHC substance name	Imidazolidin-2-thion - 96-45-7
minimum actuating torque in directions of actuation	0.3 N·m
length of the sensor	214 mm
width of the sensor	56 mm
Ambient conditions	
ambient temperature	
● during operation	-25 ... +85 °C
● during storage	-40 ... +90 °C
explosion protection category for dust	none
design of the switching contact	mechanical

Subject to change without notice
© Copyright Siemens

operating frequency rated value	50 ... 60 Hz
number of NC contacts for auxiliary contacts	2
number of NO contacts for auxiliary contacts	2
operational current at AC-15	
● at 24 V rated value	6 A
● at 125 V rated value	6 A
● at 240 V rated value	6 A
● at 400 V rated value	4 A
operational current at DC-13	
● at 24 V rated value	3 A
● at 125 V rated value	0.55 A
● at 250 V rated value	0.27 A
● at 400 V rated value	0.12 A
Enclosure	
design of the housing	block, wide
material of the enclosure	metal
coating of the enclosure	cathodic dip coating
design of the housing according to standard	No
Drive Head	
design of the actuating element	Adjustable twist lever, adjustable-length metal lever with latching, plastic roller 19 mm
shape of the switch head	roller
design of the switching function	positive opening
circuit principle	snap-action contacts
number of switching contacts safety-related	2
cable entry type	3x (M20 x 1.5)
Installation/ mounting/ dimensions	
mounting position	any
fastening method	screw fixing
Connections/ Terminals	
type of electrical connection	screw-type terminals
type of connectable conductor cross-sections	
● solid	1x (0.5 ... 1.5 mm²), 2x (0.5 ... 0.75 mm²)
● finely stranded with core end processing	1x (0.5 ... 1.5 mm²), 2x (0.5 ... 0.75 mm²)
● for AWG cables solid	1x (20 ... 16), 2x (20 ... 18)
● for AWG cables stranded	1x (20 ... 16), 2x (20 ... 18)
design of the interface for safety-related communication	without
Communication/ Protocol	
design of the interface	without
Approvals Certificates	
General Product Approval	

Confirmation

General Product Approval	Functional Saftey	Test Certificates	other
EAC	TÜV	Type Test Certificates/Test Report	Confirmation

Further information

Information on the packaging
https://support.industry.siemens.com/cs/ww/en/view/109813875
Information- and Downloadcenter (Catalogs, Brochures,…)
https://www.siemens.com/ic10
Industry Mall (Online ordering system)
https://mall.industry.siemens.com/mall/en/en/Catalog/product?mlfb=3SE5162-0CH63-1AN4

Subject to change without notice
© Copyright Siemens

Cax online generator
http://support.automation.siemens.com/WW/CAXorder/default.aspx?lang=en&mlfb=3SE5162-0CH63-1AN4
Service&Support (Manuals, Certificates, Characteristics, FAQs,...)
https://support.industry.siemens.com/cs/ww/en/ps/3SE5162-0CH63-1AN4
Image database (product images, 2D dimension drawings, 3D models, device circuit diagrams, EPLAN macros, ...)
http://www.automation.siemens.com/bilddb/cax_de.aspx?mlfb=3SE5162-0CH63-1AN4&lang=en

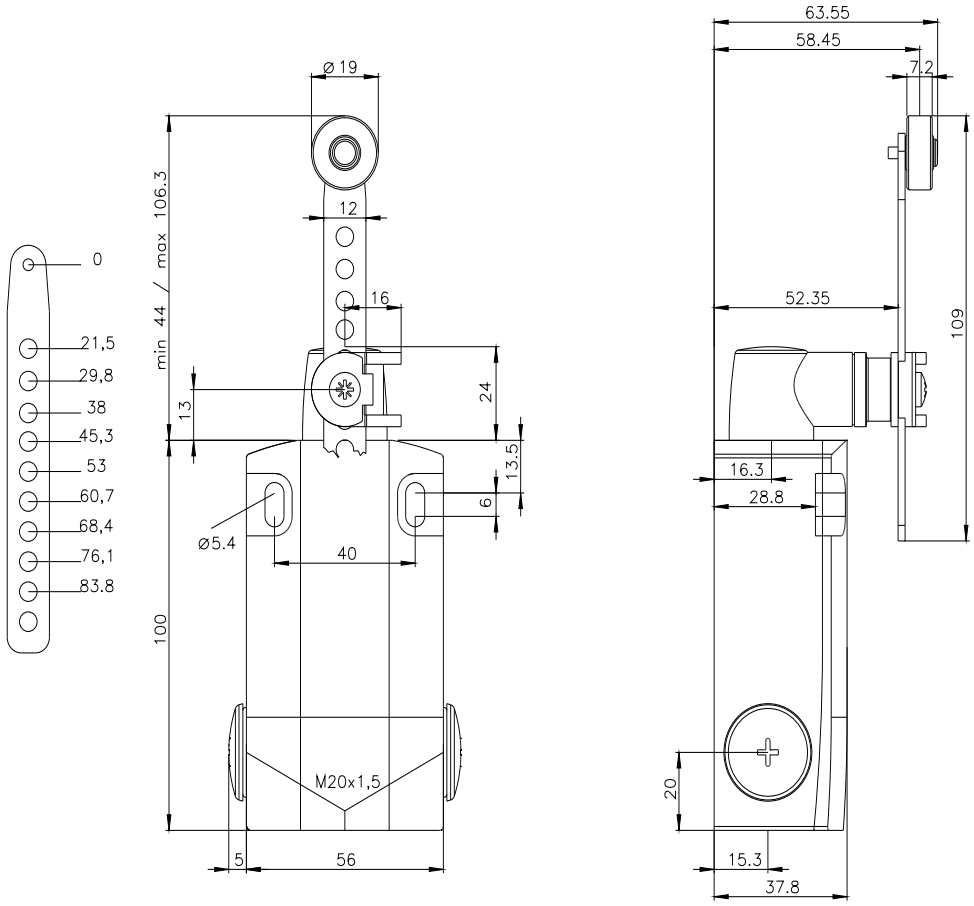

Subject to change without notice
© Copyright Siemens

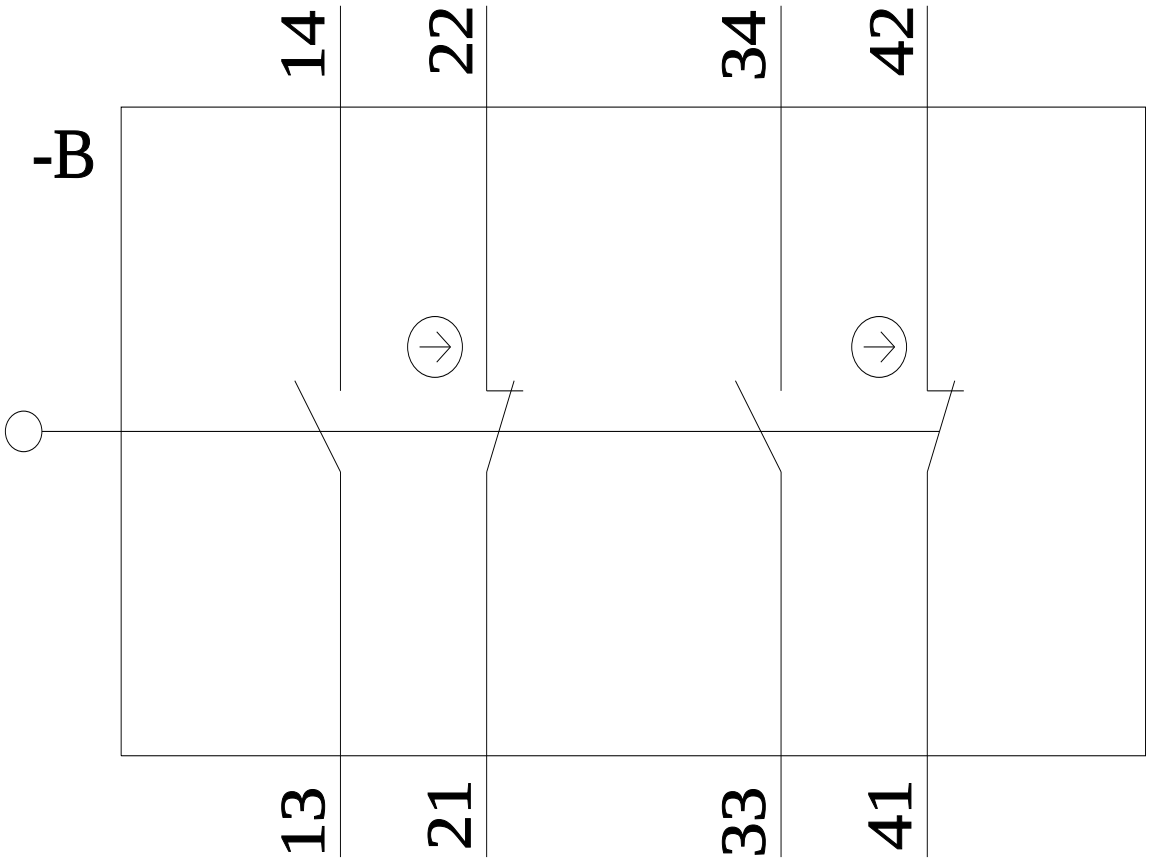

last modified: 9/5/2023

Subject to change without notice
© Copyright Siemens