SIEMENS

Data sheet 3SE5114-1CH02-1AF3



Position switch Metal enclosure 40 mm according to EN 50041 1 NO/1 NC quick action contacts with 2 LEDs, yellow/green, 24 V DC Rotary actuator right and/or left adjustable, metal lever 27 mm long and Stainless steel roller 19 mm Pin assignment: Pin1=21, Pin2=22 Pin3=13 and LED green, Pin4=14 and LED yellow, Pin5=ground LED

product brand name	SIRIUS
product designation	Mechanical position switches
product type designation	3SE5
manufacturer's article number	
● of the supplied basic switch	3SE5114-1CA00-0AF3
● of the supplied actuator head for position switches	3SE5000-0AH00
● of the supplied operating lever	3SE5000-0AA02
● of the supplied switching contacts	3SE5000-0CA00
suitability for use safety switch	Yes
General technical data	
product function positive opening	Yes
insulation voltage rated value	125 V
degree of pollution	class 3
surge voltage resistance rated value	0.8 kV
protection class IP	IP66/IP67
shock resistance	
● according to IEC 60068-2-27	30g / 11 ms
vibration resistance according to IEC 60068-2-6	0.35 mm/5g
mechanical service life (operating cycles) typical	15 000 000
thermal current	4 A
material of the enclosure of the switch head	plastic
reference code according to IEC 81346-2	B
continuous current of the C characteristic MCB	1 A; for a short-circuit current smaller than 400 A
continuous current of the quick DIAZED fuse link	4 A; for a short-circuit current smaller than 400 A
continuous current of the DIAZED fuse link gG	4 A
active principle	mechanical
repeat accuracy	0.05 mm
operating resource protection class	III (according to EN 60536)
Substance Prohibitance (Date)	07/01/2006
SVHC substance name	Blei - 7439-92-1
minimum actuating torque in directions of actuation	0.25 N·m
length of the sensor	141.5 mm
width of the sensor	40 mm
Ambient conditions	
ambient temperature	
● during operation	-25 ... +60 °C
● during storage	-40 ... +90 °C
explosion protection category for dust	none
design of the switching contact	mechanical
number of NC contacts for auxiliary contacts	1

Subject to change without notice
© Copyright Siemens

number of NO contacts for auxiliary contacts	1
operational current at DC-13	
● at 24 V rated value	3 A
Enclosure	
design of the housing	block, narrow
material of the enclosure	metal
coating of the enclosure	cathodic dip coating
design of the housing according to standard	Yes
Drive Head	
design of the actuating element	Twist lever, metal lever, 27 mm long, step 9 mm, high-grade steel roller 19 mm
standard-compliant actuator head	EN 50041, design A
shape of the switch head	roller
design of the switching function	positive opening
circuit principle	snap-action contacts
number of switching contacts safety-related	1
cable entry type	M12 plug
design of plug-in connection	M12 plug, 5-pole: Pin 1 = terminal 21, Pin 2 = 22, Pin 3 = 13/LED green, Pin 4 = 14/LED yelow, Pin 5 = ground LED
Installation/ mounting/ dimensions	
mounting position	any
fastening method	screw fixing
Connections/ Terminals	
type of electrical connection	M12 plug, fixed
Supply voltage	
type of voltage of the supply voltage of the optional LED display	DC
supply voltage	
● of LED	24 V
design of the interface for safety-related communication	without
Communication/ Protocol	
design of the interface	without
Certificates/ approvals	

General Product Approval







Confirmation




General Product Approval	Test Certificates		other
	Type Test Certificates/Test Report	Type Test Certificates/Test Report	Confirmation

Further information

Siemens has decided to exit the Russian market (see here).
https://press.siemens.com/global/en/pressrelease/siemens-wind-down-russian-business
Siemens is working on the renewal of the current EAC certificates.
Please contact your local Siemens office on the status of validity of the EAC certification if you intend to import or offer to supply these products to an EAC relevant market (other than the sanctioned EAEU member states Russia or Belarus).
Information on the packaging
https://support.industry.siemens.com/cs/ww/en/view/109813875
Information- and Downloadcenter (Catalogs, Brochures,…)
https://www.siemens.com/ic10
Industry Mall (Online ordering system)
https://mall.industry.siemens.com/mall/en/en/Catalog/product?mlfb=3SE5114-1CH02-1AF3
Cax online generator
http://support.automation.siemens.com/WW/CAXorder/default.aspx?lang=en&mlfb=3SE5114-1CH02-1AF3
Service&Support (Manuals, Certificates, Characteristics, FAQs,...)
https://support.industry.siemens.com/cs/ww/en/ps/3SE5114-1CH02-1AF3
Image database (product images, 2D dimension drawings, 3D models, device circuit diagrams, EPLAN macros, ...)
http://www.automation.siemens.com/bilddb/cax_de.aspx?mlfb=3SE5114-1CH02-1AF3&lang=en

Subject to change without notice
© Copyright Siemens

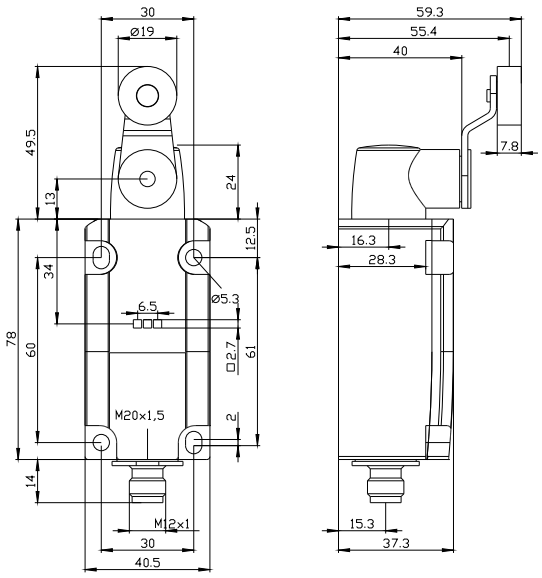

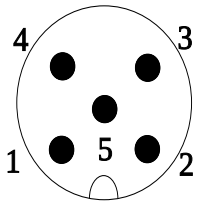

1	BN = Brown	→	21
2	WH = White	→	22
3	BU = Blue	→	13+LED-Green
4	BK = Black	→	14+LED-Yellow
5	GY = Grey	→	GND LED

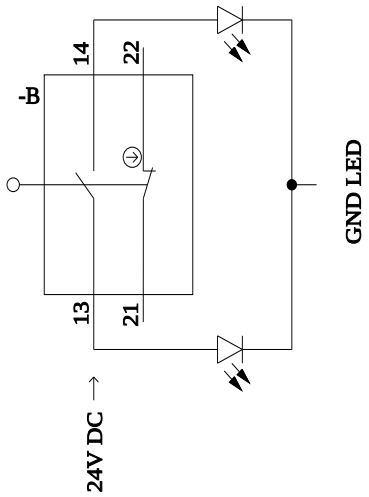

last modified: 9/5/2023

Subject to change without notice
© Copyright Siemens