SIEMENS

Data sheet 3VA1063-2ED36-0AA0

circuit breaker 3VA1 IEC frame 100 breaking capacity class B Icu=16kA @ 415V 3-pole, line protection TM210, FTFM, In=63A overload protection Ir=63A fixed short-circuit protection Ii=10 x In clamp connection

Model	
product brand name	SENTRON
product designation	Molded case circuit breaker
design of the product	Line protection
design of the overcurrent release	TM210
protection function of the overcurrent release	LI
number of poles	3
General technical data	
insulation voltage / rated value	800 V
operating voltage / at DC / rated value	500 V
operating voltage / at AC / rated value	690 V
power loss [W] / maximum	17.3 W
power loss [W] / for rated value of the current / at AC / in hot operating state / per pole	5.77 W
mechanical service life (operating cycles) / typical	20 000
electrical endurance (operating cycles) / at AC-1 / at 380/415 V	9 000
electrical endurance (operating cycles) / at AC-1 / at 690 V	6 300
product feature / for neutral conductors / upgradable/retrofittable / short-circuit and overload proof	No
ground-fault monitoring version	Without
product function	
● communication function	No
● other measurement function	No
Net Weight	1.019 kg
Current	
operational current	
● at 40 °C	63 A
● at 45 °C	63 A
● at 50 °C	63 A
● at 55 °C	62 A
● at 60 °C	61 A
● at 65 °C	60 A
● at 70 °C	58 A
Switching capacity according to IEC 60947	
switching capacity class of the circuit breaker	B
maximum short-circuit current breaking capacity (Icu)	
● at 240 V	25 kA
● at 415 V	16 kA
● at 440 V	8 kA
● at 500 V	5 kA
● at 690 V	5 kA

Subject to change without notice
© Copyright Siemens

operating short-circuit current breaking capacity (Ics)	
● at 240 V	25 kA
● at 415 V	16 kA
● at 440 V	8 kA
● at 500 V	5 kA
● at 690 V	5 kA
short-circuit current making capacity (Icm)	
● at 240 V	52.5 kA
● at 415 V	32 kA
● at 440 V	13.6 kA
● at 500 V	7.5 kA
● at 690 V	7.5 kA
design of short-circuit protection	For switching power values in DC networks, see the 3VA molded case circuit breaker device manual; link to be found under Service & Support in the last chapter
Adjustable parameters	
product feature / for L-tripping / can be switched on/off	No
adjustable response value setting current (Ir) / of the L-trip / with I2t characteristic	
● minimum	63 A
● maximum	63 A
adjustable response value delay time (tr) / for L-tripping / with I2t characteristic	
● minimum	1 s
● maximum	1 s
adjustable response value setting current (Ii) / for I-tripping	
● minimum	630 A
● maximum	630 A
adjustable setting current (InN) / for N-tripping	
● minimum	0 A
● maximum	0 A
product function / grounding protection	No
Mechanical Design	
product component	
● undervoltage release	No
● voltage trigger	No
● trip indicator	No
height [in]	5.12 in
height	130 mm
width [in]	3 in
type of connectable conductor cross-sections / of the round conductor terminal / stranded	1 x (1,5 - 70 mm²)
width	76.2 mm
depth [in]	2.76 in
depth	70 mm
Connections	
arrangement of electrical connectors / for main current circuit	Front terminal
type of electrical connection / for main current circuit	box terminal on both sides
design of the surface / of the connections / on the top of the switch (N, 1, 3, 5)	Silver
design of the surface / of the connections / on the bottom of the switch (N, 2, 4, 6)	Tin
Auxiliary circuit	
number of CO contacts / for auxiliary contacts	0
Accessories	
product extension / optional / motor drive	No
Environmental conditions	
protection class IP / on the front	IP40
ambient temperature	
● during operation / minimum	-25 °C
● during operation / maximum	70 °C
● during storage / minimum	-40 °C

Subject to change without notice
© Copyright Siemens

● during storage / maximum	80 °C

Certificates

reference code / according to IEC 81346-2	Q

General Product Approval

CCC

Confirmation

VDE

Miscellaneous

EMC

RCM

Declaration of Conformity

EG-Konf.

UK CA

Test Certificates

Type Test Certificates/Test Report

Special Test Certificate

Miscellaneous

Marine / Shipping

ABS

Marine / Shipping

BUREAU VERITAS

DNV

LRS

RMRS

CCS / China Classification Society

other

Confirmation

other

Miscellaneous

Miscellaneous

Environment

Environmental Confirmations

Further information

Siemens has decided to exit the Russian market (see here).
https://press.siemens.com/global/en/pressrelease/siemens-wind-down-russian-business

Siemens is working on the renewal of the current EAC certificates.
Please contact your local Siemens office on the status of validity of the EAC certification if you intend to import or offer to supply these products to an EAC relevant market (other than the sanctioned EAEU member states Russia or Belarus).

Information on the packaging
https://support.industry.siemens.com/cs/ww/en/view/109813875

Information- and Downloadcenter (Catalogs, Brochures,…)
http://www.siemens.com/lowvoltage/catalogs

Industry Mall (Online ordering system)
https://mall.industry.siemens.com/mall/en/en/Catalog/product?mlfb=3VA1063-2ED36-0AA0

Service&Support (Manuals, Certificates, Characteristics, FAQs,...)
https://support.industry.siemens.com/cs/ww/en/ps/3VA1063-2ED36-0AA0

Image database (product images, 2D dimension drawings, 3D models, device circuit diagrams, ...)
http://www.automation.siemens.com/bilddb/cax_en.aspx?mlfb=3VA1063-2ED36-0AA0

CAx-Online-Generator
http://www.siemens.com/cax

Tender specifications
http://www.siemens.com/specifications

Subject to change without notice
© Copyright Siemens

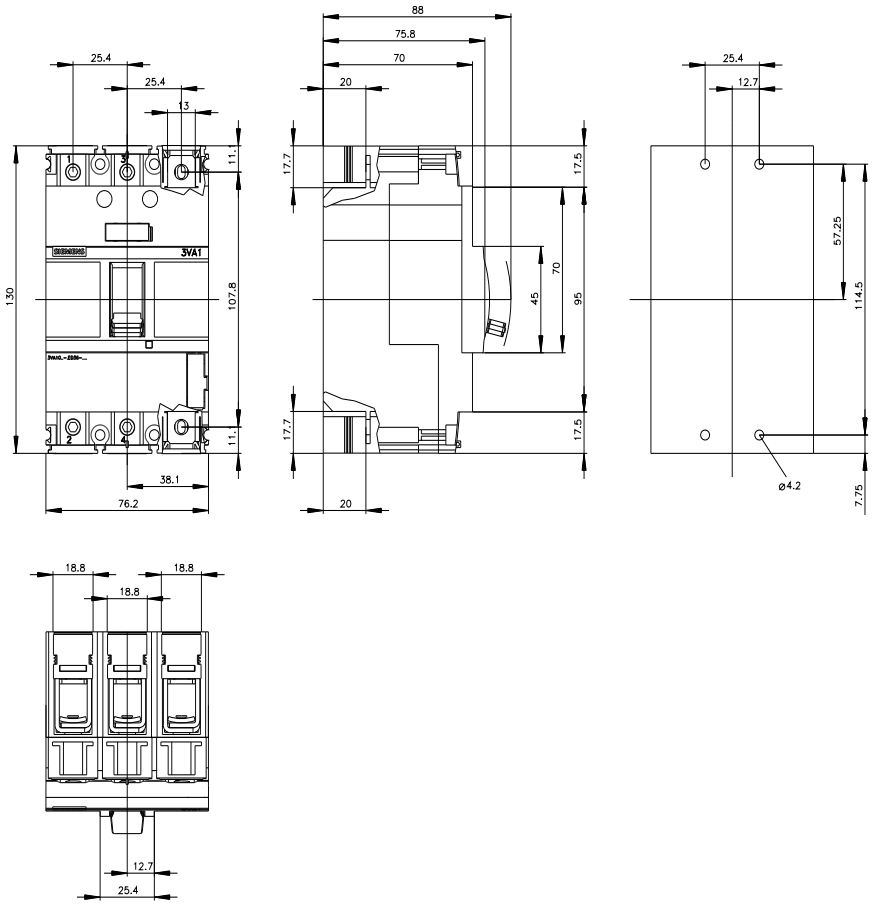

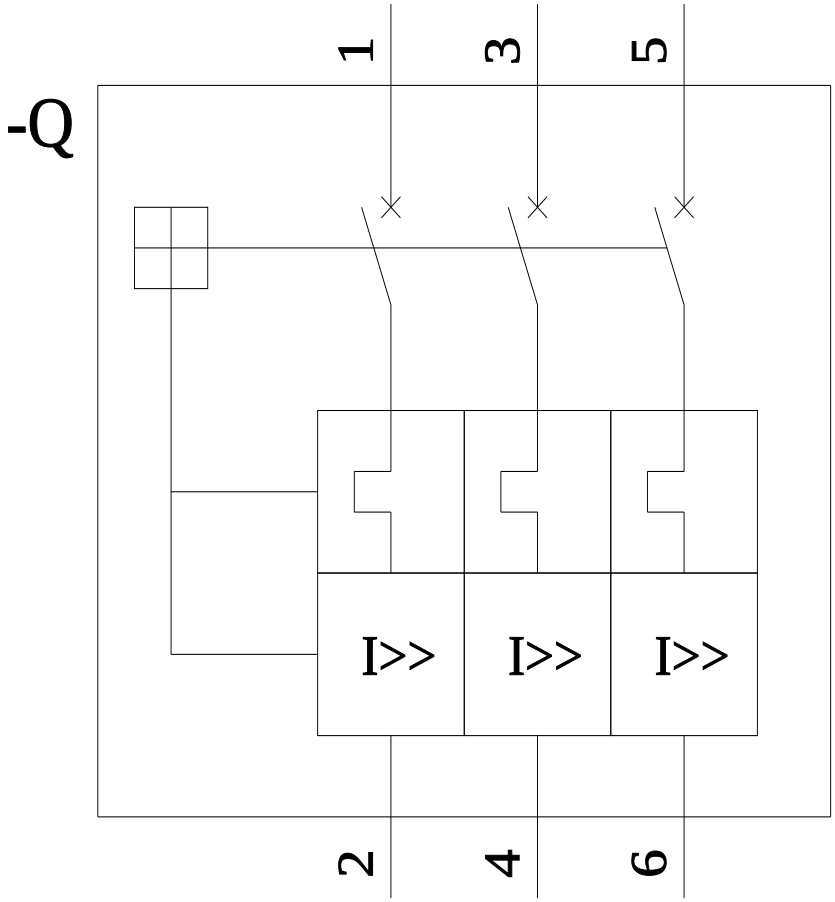

last modified: 8/10/2023

Subject to change without notice
© Copyright Siemens

Subject to change without notice
© Copyright Siemens

Subject to change without notice
© Copyright Siemens