SIEMENS

Data sheet 3VA1510-5EF32-0AA0

circuit breaker 3VA1 IEC frame 1000 breaking capacity class M Icu=55kA @ 415V 3-pole, line protection TM240, ATAM, In=1000A overload protection Ir=700A...1000A short-circuit protection Ii=5...10 x In nut keeper kit

Model	
product brand name	SENTRON
product designation	Molded case circuit breaker
design of the product	Line protection
design of the overcurrent release	TM240
protection function of the overcurrent release	LI
number of poles	3
General technical data	
insulation voltage / rated value	800 V
operating voltage / at DC / rated value	750 V
operating voltage / at AC / rated value	690 V
power loss [W] / maximum	330 W
power loss [W] / for rated value of the current / at AC / in hot operating state / per pole	110 W
mechanical service life (operating cycles) / typical	10 000
electrical endurance (operating cycles) / at AC-1 / at 380/415 V	4 900
electrical endurance (operating cycles) / at AC-1 / at 690 V	3 400
product feature / for neutral conductors / upgradable/retrofittable / short-circuit and overload proof	No
ground-fault monitoring version	Without
product function	
● communication function	No
● other measurement function	No
Net Weight	13.48 kg
Current	
operational current	
● at 40 °C	1 000 A
● at 45 °C	1 000 A
● at 50 °C	1 000 A
● at 55 °C	975 A
● at 60 °C	950 A
● at 65 °C	925 A
● at 70 °C	900 A
Switching capacity according to IEC 60947	
switching capacity class of the circuit breaker	M
maximum short-circuit current breaking capacity (Icu)	
● at 240 V	85 kA
● at 415 V	55 kA
● at 440 V	55 kA
● at 500 V	36 kA
● at 690 V	25 kA

Subject to change without notice
© Copyright Siemens

operating short-circuit current breaking capacity (Ics)	
● at 240 V	85 kA
● at 415 V	55 kA
● at 440 V	55 kA
● at 500 V	36 kA
● at 690 V	19 kA
short-circuit current making capacity (Icm)	
● at 240 V	187 kA
● at 415 V	121 kA
● at 440 V	121 kA
● at 500 V	75.6 kA
● at 690 V	52.5 kA
design of short-circuit protection	For switching power values in DC networks, see the 3VA molded case circuit breaker device manual; link to be found under Service & Support in the last chapter
Adjustable parameters	
product feature / for L-tripping / can be switched on/off	No
adjustable response value setting current (Ir) / of the L-trip / with I2t characteristic	
● minimum	700 A
● maximum	1 000 A
adjustable response value delay time (tr) / for L-tripping / with I2t characteristic	
● minimum	1 s
● maximum	1 s
adjustable response value setting current (Ii) / for I-tripping	
● minimum	5 000 A
● maximum	10 000 A
adjustable setting current (InN) / for N-tripping	
● minimum	0 A
● maximum	0 A
product function / grounding protection	No
Mechanical Design	
product component	
● undervoltage release	No
● voltage trigger	No
● trip indicator	No
height [in]	12.6 in
height	320 mm
width [in]	8.27 in
width	210 mm
depth [in]	4.72 in
depth	120 mm
Connections	
arrangement of electrical connectors / for main current circuit	Front terminal
type of electrical connection / for main current circuit	nut keeper kit on both ends
type of connectable conductor cross-sections / for flat-bar terminal connection / minimum	20 x 4 mm
type of connectable conductor cross-sections / for flat-bar terminal connection / maximum	50 x 28 mm
design of the surface / of the connections / on the top of the switch (N, 1, 3, 5)	Silver
design of the surface / of the connections / on the bottom of the switch (N, 2, 4, 6)	Silver
Auxiliary circuit	
number of CO contacts / for auxiliary contacts	0
Accessories	
product extension / optional / motor drive	No
Environmental conditions	
protection class IP / on the front	IP40
ambient temperature	
● during operation / minimum	-25 °C
● during operation / maximum	70 °C

Subject to change without notice
© Copyright Siemens

● during storage / minimum	-40 °C
● during storage / maximum	80 °C
reference code / according to IEC 81346-2	Q

Approvals / Certificates

General Product Approval

EG-Konf.	UK CA	Confirmation	CCC	VDE	Miscellaneous

General Product Approval	EMV	Test Certificates			Marine / Shipping
EAC	RCM	Special Test Certificate	Type Test Certificates/Test Report	Miscellaneous	ABS

Marine / Shipping				other	
BUREAU VERITAS	DNV	LRS	RMRS	Miscellaneous	Confirmation

other	Environment
Miscellaneous	Environmental Confirmations

Further information

Siemens has decided to exit the Russian market (see here).
https://press.siemens.com/global/en/pressrelease/siemens-wind-down-russian-business
Siemens is working on the renewal of the current EAC certificates.
Please contact your local Siemens office on the status of validity of the EAC certification if you intend to import or offer to supply these products to an EAC relevant market (other than the sanctioned EAEU member states Russia or Belarus).
Information on the packaging
https://support.industry.siemens.com/cs/ww/en/view/109813875
Information- and Downloadcenter (Catalogs, Brochures,…)
http://www.siemens.com/lowvoltage/catalogs
Industry Mall (Online ordering system)
https://mall.industry.siemens.com/mall/en/en/Catalog/product?mlfb=3VA1510-5EF32-0AA0
Service&Support (Manuals, Certificates, Characteristics, FAQs,...)
https://support.industry.siemens.com/cs/ww/en/ps/3VA1510-5EF32-0AA0
Image database (product images, 2D dimension drawings, 3D models, device circuit diagrams, ...)
http://www.automation.siemens.com/bilddb/cax_en.aspx?mlfb=3VA1510-5EF32-0AA0
CAx-Online-Generator
http://www.siemens.com/cax
Tender specifications
http://www.siemens.com/specifications

Subject to change without notice
© Copyright Siemens

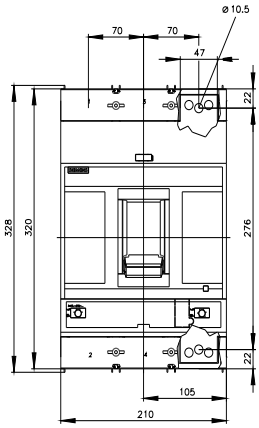

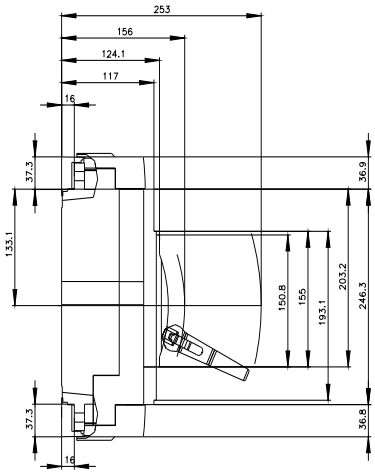

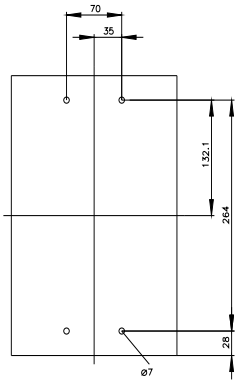

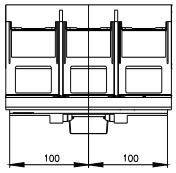

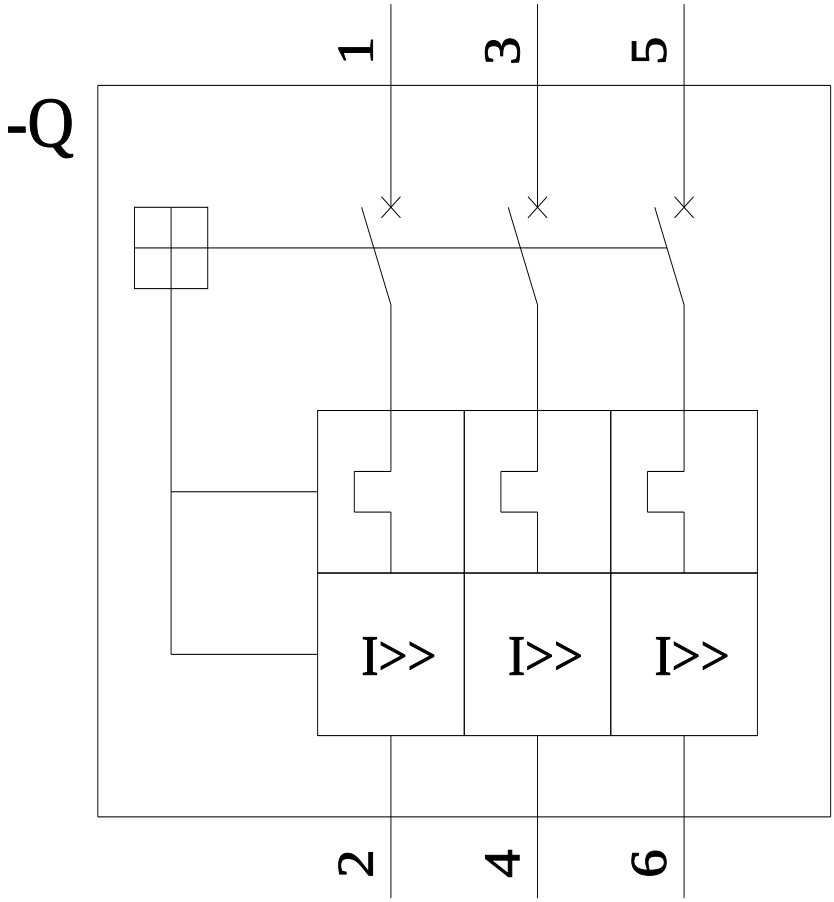

last modified: 8/10/2023

Subject to change without notice
© Copyright Siemens

Subject to change without notice
© Copyright Siemens

Subject to change without notice
© Copyright Siemens