SIEMENS

Data sheet 3VA6440-8JQ41-2AA0

Circuit breaker 3VA6 UL Frame 600 breaking capacity class L 150kA @ 480V 4-pole, Line protection ETU560, LSIG, In=400A overload protection, 100% rated Ir=160A...400A Short-circuit protection Isd=0.6..10x In, Ii=1.5..12x In N conductor protection adjustable (OFF, up to 160%) Ground-fault protection Ig=0.2...1 x In= tg=0.05-0.8s without connection

Model	
product brand name	SENTRON
product designation	Molded-case circuit breaker
product designation / according to UL file	LLAE
design of the product	System protection
design of the load switch / according to UL 489 / Heating, Air Conditioning, and Refrigeration circuit breaker (HACR Type)	Yes
design of the overcurrent release	ETU560
protection function of the overcurrent release	LSIG
number of poles	4
General technical data	
insulation voltage / rated value	800 V
operating voltage / at AC / rated value	690 V
power loss [W] / maximum	70 W
power loss [W] / for rated value of the current / at AC / in hot operating state / per pole	23.33 W
mechanical service life (operating cycles) / typical	20 000
electrical endurance (operating cycles) / at AC-1 / at 380/415 V	4 000
electrical endurance (operating cycles) / at AC-1 / at 690 V	3 500
electrical endurance (operating cycles) / at 480 V	4 000
electrical endurance (operating cycles) / at 600 V	3 500
product feature / for neutral conductors / upgradable/retrofittable / short-circuit and overload proof	No
ground-fault monitoring version	Summation current formation L + N-conductor
product function	
● communication function	Yes
● other measurement function	No
Net Weight	6.9 kg
Current	
marking / according to UL 489 / 100%-rated breaker	Yes
operational current	
● at 40 °C	400 A
● at 45 °C	400 A
● at 50 °C	400 A
● at 55 °C	400 A
● at 60 °C	400 A
● at 65 °C	400 A
● at 70 °C	400 A
Switching capacity according to IEC 60947	
switching capacity class of the circuit breaker	L
maximum short-circuit current breaking capacity (Icu)	

Subject to change without notice
© Copyright Siemens

● at 240 V	200 kA
● at 415 V	150 kA
● at 690 V	6 kA
operating short-circuit current breaking capacity (Ics)	
● at 240 V	200 kA
● at 415 V	150 kA
● at 690 V	6 kA
short-circuit current making capacity (Icm)	
● at 240 V	440 kA
● at 415 V	330 kA
● at 690 V	9 kA
Switching capacity according to UL 489	
current breaking capacity	
● at 240 V	200 kA
● at 480 V	150 kA
● at 600 V	50 kA
Adjustable parameters	
adjustable response value setting current (Ir) / of the L-trip / with I2t characteristic	
● minimum	160 A
● maximum	400 A
adjustable response value delay time (tr) / for L-tripping / with I2t characteristic	
● minimum	0.5 s
● maximum	25 s
adjustable response value setting current (Isd) / of S-trip / with I0t characteristic	
● minimum	240 A
● maximum	4 000 A
adjustable response value setting current (Isd) / of S-trip / with I2t characteristic	
● minimum	240 A
● maximum	4 000 A
adjustable response value delay time (tsd) / for S-tripping / with I0t characteristic	
● minimum	0.05 s
● maximum	0.5 s
adjustable response value delay time (tsd) / for S-tripping / with I2t characteristic	
● minimum	0.05 s
● maximum	0.5 s
adjustable response value setting current (Ii) / for I-tripping	
● minimum	600 A
● maximum	4 800 A
adjustable current response value current / for G-tripping / with standard characteristic	
● initial value	80 A
● full-scale value	400 A
adjustable response value delay time (tg) / for G-tripping / with I0t characteristic	
● minimum	0.05 s
● maximum	0.8 s
adjustable response value setting current (Ig) / for G-tripping / with I2t characteristic	
● minimum	80 A
● maximum	400 A
adjustable response value delay time (tg) / for G-tripping / with I2t characteristic	
● minimum	0.05 s
● maximum	0.8 s
adjustable setting current (InN) / for N-tripping	
● minimum	80 A
● maximum	600 A
adjustable delay time / of S-trip / with I2t characteristic	0.5 s

Subject to change without notice
© Copyright Siemens

adjustable current response value current / of instantaneous short-circuit trip unit	
● minimum	600 A
● maximum	4 800 A
design of the N-conductor protection	adjustable OFF; 20% to 150%
product function / grounding protection	Yes
total break time / for G-tripping / with standard characteristic	
● initial value	0.05 s
● full-scale value	0.8 s
Mechanical Design	
product component	
● undervoltage release	No
● voltage trigger	No
● trip indicator	No
height [in]	9.76 in
height	248 mm
width [in]	7.24 in
width	184 mm
depth [in]	4.33 in
depth	110 mm
Connections	
arrangement of electrical connectors / for main current circuit	Without connection
type of electrical connection / for main current circuit	Without
Auxiliary circuit	
number of CO contacts / for auxiliary contacts	0
Accessories	
product extension / optional / motor drive	Yes
Environmental conditions	
protection class IP / on the front	IP40
ambient temperature	
● during operation / minimum	-25 °C
● during operation / maximum	70 °C
● during storage / minimum	-40 °C
● during storage / maximum	80 °C
Certificates	
reference code / according to IEC 81346-2	Q
certificate of suitability / as approval for NAVAL (no combat vessels) / supplement SB	Yes

General Product Approval

CCC	Confirmation	UL	UL	Miscellaneous	EAC

EMC	Declaration of Conformity		Marine / Shipping		
RCM	UKCA	CE EG-Konf.	ABS	DNV	LRS

other			Dangerous Good	Environment
Confirmation	Miscellaneous	Miscellaneous	Transport Information	Environmental Con-firmations

Further information

Subject to change without notice
© Copyright Siemens

Siemens has decided to exit the Russian market (see here).
https://press.siemens.com/global/en/pressrelease/siemens-wind-down-russian-business

Siemens is working on the renewal of the current EAC certificates.
Please contact your local Siemens office on the status of validity of the EAC certification if you intend to import or offer to supply these products to an EAC relevant market (other than the sanctioned EAEU member states Russia or Belarus).

Information on the packaging
https://support.industry.siemens.com/cs/ww/en/view/109813875

Information- and Downloadcenter (Catalogs, Brochures,…)
http://www.siemens.com/lowvoltage/catalogs

Industry Mall (Online ordering system)
https://mall.industry.siemens.com/mall/en/en/Catalog/product?mlfb=3VA6440-8JQ41-2AA0

Service&Support (Manuals, Certificates, Characteristics, FAQs,...)
https://support.industry.siemens.com/cs/ww/en/ps/3VA6440-8JQ41-2AA0

Image database (product images, 2D dimension drawings, 3D models, device circuit diagrams, ...)
http://www.automation.siemens.com/bilddb/cax_en.aspx?mlfb=3VA6440-8JQ41-2AA0

CAx-Online-Generator
http://www.siemens.com/cax

Tender specifications
http://www.siemens.com/specifications

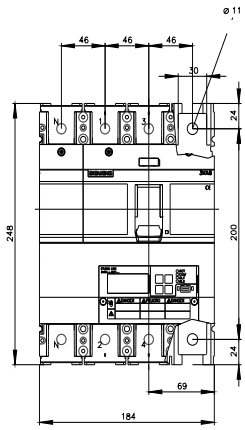

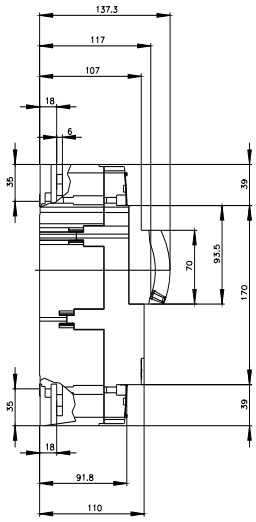

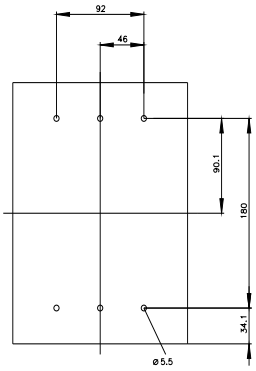

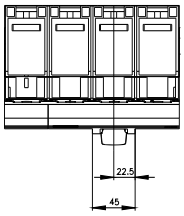

Subject to change without notice
© Copyright Siemens

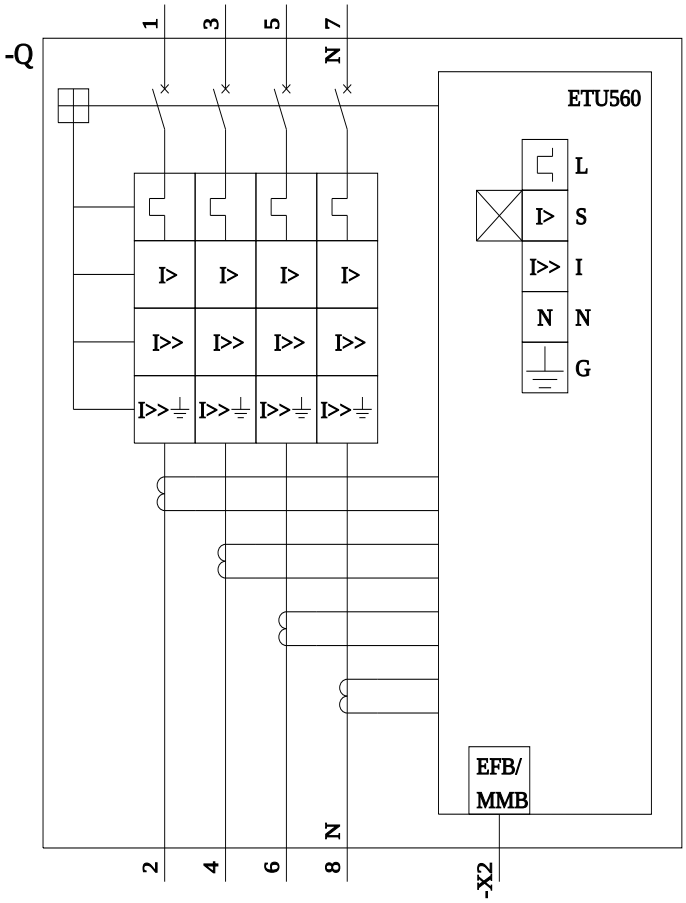

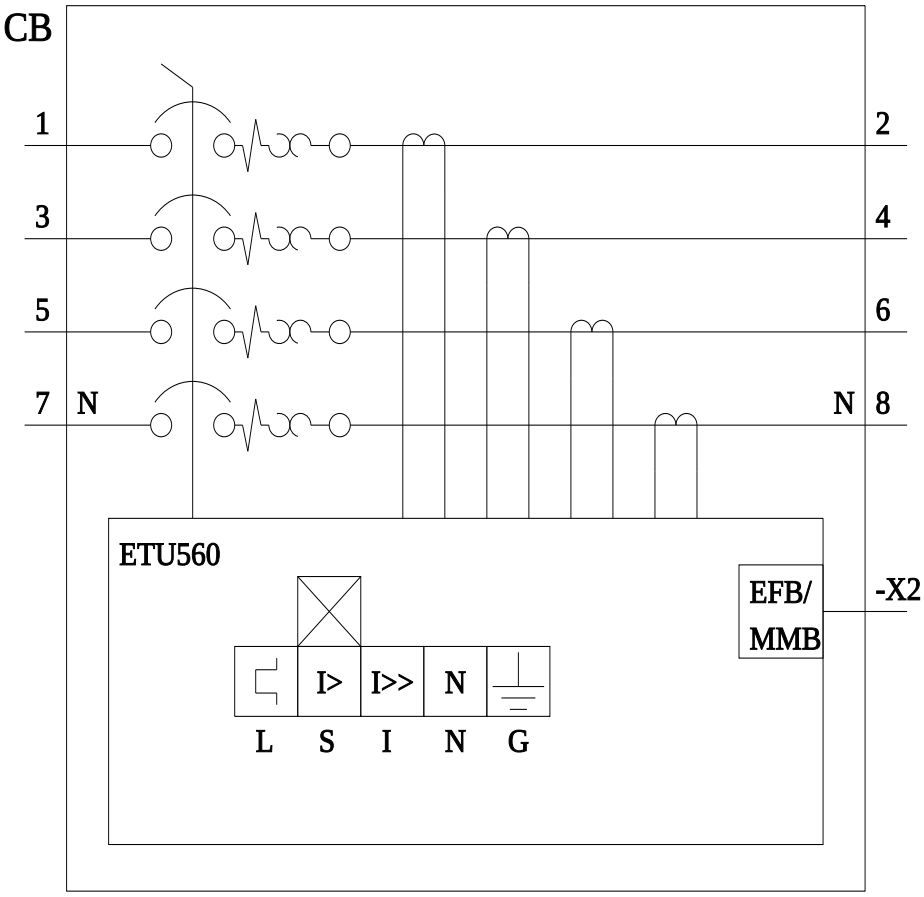

last modified: 8/14/2023

Subject to change without notice
© Copyright Siemens

Subject to change without notice
© Copyright Siemens