en

Schneider Electric

KNX Switch Actuator Basic REG-K/2x/ 16 A with manual mode

Operating instructions

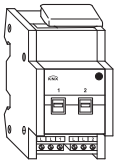

MTN6700-0002

For your safety

DANGER
Risk of death from electric shock.
All work on the device must only be carried out by trained and skilled electricians. Observe the country-specific regulations as well as the valid KNX guidelines.

DANGER
Risk of death from electric shock.
Even if the manual switch is in the „OFF“ position, a KNX telegram can switch the connections to being live at any time. Before working on the device, always diconnect the fuse in the incoming circuit from the supply.

CAUTION
The device can become damaged.
Only operate the device according to the specifications stated in the Technical data.

CAUTION
Adjacent devices can be damaged. Only install devices with at least basic insulation next to the device.

Getting to know the actuator

The KNX Switch Actuator Basic REG-K/2x/16 A with manual mode (referred to below as the **actuator**) can switch two loads via separate, floating make contacts. You can also manually switch the connected loads with manual switches on the actuator without bus voltage.

The actuator has a bus coupler. It is installed on a DIN rail TH 35 according to EN 60715, with the bus connection made via a bus connecting terminal. It is supplied with power from the bus voltage. A data rail is not required.

Connections, displays and operating elements

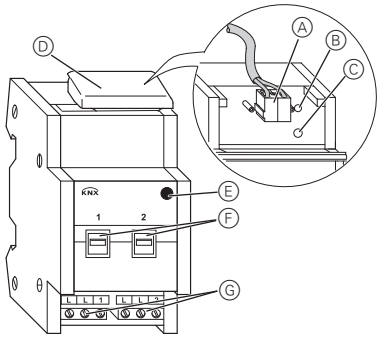

Ⓐ Bus connection terminal, max. 4 core pairs
Ⓑ Programming LED (red)
Ⓒ Programming button
Ⓓ Cable cover
Ⓔ Operating LED „RUN“ (green)
Ⓕ Manual switch
Ⓖ Screw terminals

Mounting the actuator

① Set the actuator onto the DIN rail.

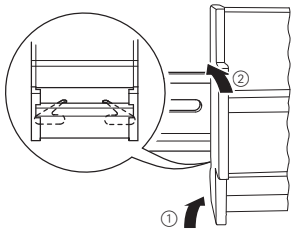

② Connect KNX.

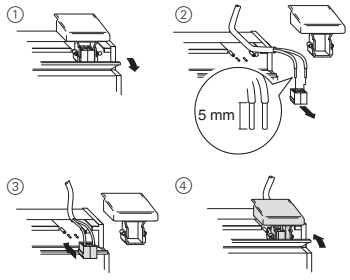

WARNING
Risk of death from electric shock. The device can be damaged.
Safety clearance must be guaranteed in accordance with IEC 60664--1. There must be at least 4 mm between the individual cores of the 230 V supply cable and the KNX line Ⓐ.

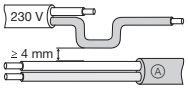

DANGER
Risk of death from electric shock.
Voltage may be present at the outputs when the mains voltage is connected to the system.
If subjected to strong vibrations during transportation, the switch contacts might change to the enabled state.
After connecting the bus voltage, set the relays of the channels to the position desired simply by switching „On/Off“ or by changing the manual switch to „OFF“.

CAUTION
The actuator can become damaged.
Protect the switch contacts with a series-connected 16 A circuit breaker.

③ Connect the bus voltage.
④ Wait at least 30 seconds.
⑤ Connect the load.

The cables to the loads as well as the system voltages (L1, L2 or L3) are connected via screw terminals for max. 16 A. Every two L connections are bridged internally.

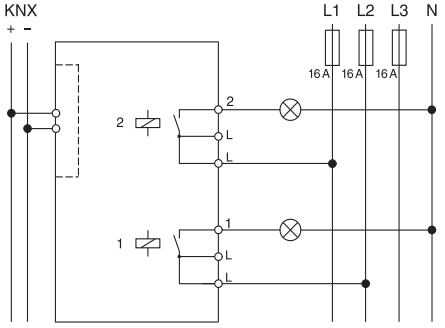

⑥ Connect the mains voltage.

Now you can check the functionality of the actuator and the connected loads without having to load the application from the ETS (See the section "Operating the actuator").

Putting the actuator into operation

① Press the programming button.

The programming-LED lights up.

② Load the physical address and application into the device from the ETS.

The programming LED goes out.

The operation LED lights up: The application was loaded successfully, the device is ready for operation.

Operating the actuator

Normally, you control connected devices using push-buttons or by remote control. However, you can manually switch each of the actuator's channels on and off directly at the manual switches.

S1B20630-00 12/11

Technical data

External auxiliary voltage:	None
Power supply from bus:	DC 24 V / max. 10 mA
Insulation voltage:	AC 4 kV between bus / mains voltage
Switch contact:	2 x make contact, floating
Rated voltage: (Nominal voltage)	AC 100–240 V, 50–60 Hz
Tolerance range:	min. AC 90 V – max. AC 264 V
Nominal current:	16 A, inductive load cosφ=0,6
Connected load	
Incandescent lamps:	1600 W at AC 100 V 3600 W at AC 230 V 3840 W at AC 240 V with 10,000 switching cycles
Halogen lamps:	1080 W at AC 100 V 2500 W at AC 230 V 2500 W at AC 240 V with 10,000 switching cycles
Fluorescent lamps:	900 VA at AC 100 V 2000 VA at AC 230 V 2000 VA at AC 240 V parallel compensated with 5,000 switching cycles
Capacitive load:	16 A, 105 µF at AC 100 V 16 A, 105 µF at AC 230 V 16 A, 105 µF at AC 240 V with 5,000 switching cycles
Fuse:	The switch contacts must be protected by series-connected 16 A circuit-breakers.
Switching frequency:	max. 10 per minute at nominal load
Ambient temperature:	
Operation:	-5 °C to +45 °C
Max. humidity:	93 %, no moisture condensation
Environment:	can be used at up to 2000 m above sea level (MSL)
Operating elements:	1 programming button 2 manual switches
Display elements:	1 red LED: programming check 1 green LED: ready for operation „RUN“
Connections	
Bus:	via two 1 mm pins for bus connecting terminal
Outer connector:	2x 3-gang screw terminal for each max. 2.5 mm^2
Device width:	2.5 modules = approx. 45 mm

Schneider Electric Industries SAS

If you have technical questions, please contact the Customer Care Center in your country.

www.schneider-electric.com => "Select your country"

S1B20630-00 12/11