Pact Series

Master**Pact,** Com**Pact,** Power**Pact**

Cybersecurity Guide

Pact Series offers world-class breakers and switches

DOCA0122EN-04
01/2021

Legal Information

The Schneider Electric brand and any trademarks of Schneider Electric SE and its subsidiaries referred to in this guide are the property of Schneider Electric SE or its subsidiaries. All other brands may be trademarks of their respective owners.

This guide and its content are protected under applicable copyright laws and furnished for informational use only. No part of this guide may be reproduced or transmitted in any form or by any means (electronic, mechanical, photocopying, recording, or otherwise), for any purpose, without the prior written permission of Schneider Electric.

Schneider Electric does not grant any right or license for commercial use of the guide or its content, except for a non-exclusive and personal license to consult it on an "as is" basis. Schneider Electric products and equipment should be installed, operated, serviced, and maintained only by qualified personnel.

As standards, specifications, and designs change from time to time, information contained in this guide may be subject to change without notice.

To the extent permitted by applicable law, no responsibility or liability is assumed by Schneider Electric and its subsidiaries for any errors or omissions in the informational content of this material or consequences arising out of or resulting from the use of the information contained herein.

Table of Contents

Safety Information....5
About the Book....7
An Introduction to Cybersecurity....10
An Introduction to Cybersecurity....11
Why Cybersecurity Is Relevant for MasterPact, ComPact, and PowerPact Circuit Breakers....12
Cybersecurity Recommendations for System Design, Planning and Installation....16
Identifying and Protecting Sensitive and Critical Information and Operations....17
Designing a Password Policy....19
Training....22
Cybersecurity Recommendations for Local Access....23
Restricting Local Access to the MasterPact, ComPact, and PowerPact Circuit Breaker....24
Recommendations for Protecting Local Access to the MicroLogic HMI....25
Recommendations for Protecting Access Through NFC (MasterPact MTZ)....26
Recommendations for Protecting Access Through Bluetooth® Wireless Technology (MasterPact MTZ)....28
Recommendations for Protecting Access to the MicroLogic X Control Unit Through Mini USB Port (MasterPact MTZ)....30
Recommendations for Protecting Access to the MicroLogic Trip Unit Through Test Port....32
Recommendations for Protecting Access to the MicroLogic Trip Unit Through FDM121 Display....34
Cybersecurity Recommendations for Remote Access....35
Restricting Remote Access to the MasterPact, ComPact, and PowerPact Circuit Breaker....36
Separating OT Network from Corporate Network....38
Recommendations for Protecting Remote Access to the MicroLogic Trip Unit or Control Unit Through Ethernet....39
Recommendations for Protecting Remote Access to the MicroLogic Trip Unit or Control Unit Through Modbus-SL....41
Cybersecurity Recommendations for Firmware Updates and Digital Modules....42
Installing Firmware Updates....43
Purchasing and Installing Digital Modules (MasterPact MTZ)....45
Schneider Electric Cybersecurity Support Portal....47
Glossary....49

Safety Information

What's in This Part

Important Information

Read these instructions carefully, and look at the equipment to become familiar with the device before trying to install, operate, service, or maintain it. The following special messages may appear throughout this documentation or on the equipment to warn of potential hazards or to call attention to information that clarifies or simplifies a procedure.

The addition of this symbol to a "Danger" or "Warning" safety label indicates that an electrical hazard exists which will result in personal injury if the instructions are not followed.

This is the safety alert symbol. It is used to alert you to potential personal injury hazards. Obey all safety messages that follow this symbol to avoid possible injury or death.

⚠ DANGER

DANGER indicates a hazardous situation which, if not avoided, **will result in** death or serious injury.

⚠ WARNING

WARNING indicates a hazardous situation which, if not avoided, **could result in** death or serious injury.

⚠ CAUTION

CAUTION indicates a hazardous situation which, if not avoided, **could result** in minor or moderate injury.

NOTICE

NOTICE is used to address practices not related to physical injury.

Please Note

Electrical equipment should be installed, operated, serviced, and maintained only by qualified personnel. No responsibility is assumed by Schneider Electric for any consequences arising out of the use of this material.

A qualified person is one who has skills and knowledge related to the construction and operation of electrical equipment and its installation, and has received safety training to recognize and avoid the hazards involved.

CYBERSECURITY SAFETY NOTICE

⚠ WARNING

POTENTIAL COMPROMISE OF SYSTEM AVAILABILITY, INTEGRITY, AND CONFIDENTIALITY

- Change default passwords at first use to help prevent unauthorized access to device settings, controls, and information.
- Disable unused ports/services and default accounts to help minimize pathways for malicious attackers.
- Place networked devices behind multiple layers of cyber defenses (such as firewalls, network segmentation, and network intrusion detection and protection).
- Use cybersecurity best practices (for example, least privilege, separation of duties) to help prevent unauthorized exposure, loss, modification of data and logs, or interruption of services.

Failure to follow these instructions can result in death, serious injury, or equipment damage.

About the Book

Pact Series Master Range

Future-proof your installation with Schneider Electric's low-voltage and medium-voltage Pact Series. Built on legendary Schneider Electric innovation, the Pact Series comprises world-class circuit breakers, switches, residual current devices and fuses, for all standard and specific applications. Experience robust performance with Pact Series within the EcoStruxure-ready switchgear, from 16 to 6300 A in low-voltage and up to 40.5 kV in medium-voltage.

Document Scope

This guide provides information on cybersecurity aspects for MasterPact, ComPact, and PowerPact circuit breakers with MicroLogic trip units and control units to help system designers and operators promote and implement a secure operating environment for the product.

This guide does not address the more general topic of how to secure your operational technology network, or your enterprise Ethernet network. For a general introduction to cybersecurity threats and how to address them, refer to *How Can I Reduce Vulnerability to Cyber Attacks?*.

NOTE: In this guide, the term **security** is used to refer to cybersecurity.

Validity Note

The information in this guide is relevant for the following circuit breakers:

- MasterPact MTZ circuit breakers with MicroLogic control units
- MasterPact NT/NW circuit breakers with MicroLogic trip units
- ComPact NS circuit breakers with MicroLogic trip units
- PowerPact P- and R-Frame circuit breakers with MicroLogic trip units
- ComPact NSX circuit breakers with MicroLogic trip units
- PowerPact H-, J-, and L-Frame circuit breakers with MicroLogic trip units

Online Information

The information contained in this guide is likely to be updated at any time. Schneider Electric strongly recommends that you have the most recent and up-to-date version available on www.se.com/ww/en/download.

The technical characteristics of the devices described in this guide also appear online. To access the information online, go to the Schneider Electric home page at www.se.com.

Related Documents for IEC Devices

Title of Documentation	Reference Number
MasterPact MTZ - MicroLogic X Control Unit - User Guide	DOCA0102EN DOCA0102ES DOCA0102FR DOCA0102ZH
Compact NSX – Micrologic 5/6/7 Electronic Trip Units - User Guide	DOCA0141EN DOCA0141ES DOCA0141FR DOCA0141ZH
MasterPact NT/NW - MicroLogic A and E Trip Units - User Guide	04443724AA (EN) EAV16735 (ES) 04443723AA (FR)
MasterPact NT/NW - MicroLogic P Trip Units - User Guide	04443726AA (EN) EAV16736 (ES) 04443725AA (FR)

Title of Documentation	Reference Number
MasterPact NT/NW - MicroLogic H Trip Units - User Guide	04443728AA (EN) EAV16737 (ES) 04443727AA (FR)
Enerlin'X EIFE - Embedded Ethernet Interface for One MasterPact MTZ Drawout Circuit Breaker - User Guide	DOCA0106EN DOCA0106ES DOCA0106FR DOCA0106ZH
Enerlin'X IFE - Ethernet Switchboard Server - User Guide	DOCA0084EN DOCA0084ES DOCA0084FR DOCA0084ZH
Enerlin'X IFE - Ethernet Interface for One Circuit Breaker - User Guide	DOCA0142EN DOCA0142ES DOCA0142FR DOCA0142ZH
How Can I Reduce Vulnerability to Cyber Attacks?	Cybersecurity System Technical Note
MicroLogic Trip Units and Control Units - Firmware History	DOCA0155EN
MasterPact MTZ - MicroLogic X Control Unit - Firmware Release Note	DOCA0144EN
Enerlin'X IFM - Modbus-SL Interface for One Circuit Breaker (TRV00210/STRV00210) - Firmware Release Note	DOCA0145EN
Enerlin'X IFM - Modbus-SL Interface for One Circuit Breaker (LV434000) - Firmware Release Note	DOCA0146EN
Enerlin'X IFE/EIFE Ethernet Interface - Firmware Release Note	DOCA0147EN
Enerlin'X IFE Switchboard Server - Firmware Release Note	DOCA0148EN
Enerlin'X IO Input/Output Application Module for One Circuit Breaker - Firmware Release Note	DOCA0149EN
Enerlin'X FDM121 - Firmware Release Note	DOCA0150EN
Enerlin'X FDM128 - Ethernet Display for Eight Devices - Firmware Release Note	DOCA0151EN
BCM ULP - Firmware Release Note	DOCA0152EN
ComPact NSX / PowerPact H-, J-, and L-Frame MicroLogic 5/6 - Firmware Release Note	DOCA0153EN
EcoStruxure Cybersecurity Admin Expert User Guide	NRJUSG18807EN

You can download these technical publications and other technical information from our website at www.se.com/ww/en/download/.

Related Documents for UL/ANSI Devices

Title of Documentation	Reference Number
MasterPact MTZ - MicroLogic X Control Unit - User Guide	DOCA0102EN DOCA0102ES DOCA0102FR DOCA0102ZH
PowerPact H-, J-, and L-Frame - MicroLogic 5 and 6 Trip Units - User Guide	48940-312-01 (EN, ES, FR)
MasterPact NT/NW - MicroLogic A Trip Units - User Guide	48049-136-05 (EN, ES, FR)
MasterPact NT/NW - MicroLogic P Trip Units - User Guide	48049-137-05 (EN)
MasterPact NT/NW - MicroLogic H Trip Units - User Guide	48049-330-03 (EN, ES, FR)
Enerlin'X EIFE - Embedded Ethernet Interface for One MasterPact MTZ Drawout Circuit Breaker - User Guide	DOCA0106ENDO-CA0106ES DOCA0106FR DOCA0106ZH
Enerlin'X IFE - Ethernet Switchboard Server - User Guide	1040IB1401(EN) 1040IB1402(ES) 1040IB1403(FR)
Enerlin'X IFE - Ethernet Interface for One Circuit Breaker - User Guide	0602IB1801EN 0602IB1802ES

Title of Documentation	Reference Number
	0602IB1803FR
How Can I Reduce Vulnerability to Cyber Attacks?	Cybersecurity System Technical Note
MicroLogic Trip Units and Control Units - Firmware History	DOCA0155EN
MasterPact MTZ - MicroLogic X Control Unit - Firmware Release Note	DOCA0144EN
Enerlin'X IFM - Modbus-SL Interface for One Circuit Breaker (TRV00210/STRV00210) - Firmware Release Note	DOCA0145EN
Enerlin'X IFM - Modbus-SL Interface for One Circuit Breaker (LV434000) - Firmware Release Note	DOCA0146EN
Enerlin'X IFE/EIFE Ethernet Interface - Firmware Release Note	DOCA0147EN
Enerlin'X IFE Switchboard Server - Firmware Release Note	DOCA0148EN
Enerlin'X IO Input/Output Application Module for One Circuit Breaker - Firmware Release Note	DOCA0149EN
Enerlin'X FDM121 - Firmware Release Note	DOCA0150EN
Enerlin'X FDM128 - Ethernet Display for Eight Devices - Firmware Release Note	DOCA0151EN
BCM ULP - Firmware Release Note	DOCA0152EN
ComPact NSX / PowerPact H-, J-, and L-Frame MicroLogic 5/6 - Firmware Release Note	DOCA0153EN
EcoStruxure Cybersecurity Admin Expert User Guide	NRJUSG18807EN

You can download these technical publications and other technical information from our website at www.se.com/us/en/download/.

An Introduction to Cybersecurity

What's in This Part

An Introduction to Cybersecurity 11
Why Cybersecurity Is Relevant for MasterPact, ComPact, and PowerPact Circuit Breakers 12

Chapter Overview

This chapter provides general information on the Schneider Electric cybersecurity policy, and why cybersecurity is relevant for MasterPact, ComPact, and PowerPact circuit breakers with MicroLogic trip units or control units.

An Introduction to Cybersecurity

Introduction

Cybersecurity is intended to protect your communication network and all equipment connected to it from attacks that could disrupt operations (availability), modify information (integrity), or give away confidential information (confidentiality). The objective of cybersecurity is to provide increased levels of protection for information and physical assets from theft, corruption, misuse, or accidents while maintaining access for their intended users. There are many aspects to cybersecurity including designing secure systems, restricting access using physical and digital methods, identifying users, as well as implementing security procedures and best practice policies.

Schneider Electric Guidelines

In addition to the recommendations provided in this guide that are specific to MasterPact, ComPact, and PowerPact circuit breakers, you should follow the Schneider Electric defense-in-depth approach to cybersecurity.

This approach is described in the system technical note *How Can I Reduce Vulnerability to Cyber Attacks?*.

In addition, you will find many useful resources and up-to-date information on the Cybersecurity Support Portal on the Schneider Electric global website, page 47.

Why Cybersecurity Is Relevant for MasterPact, ComPact, and PowerPact Circuit Breakers

Overview

The MasterPact, ComPact, and PowerPact circuit breaker is a key component of any plant or equipment because it controls the power supply to the process, provides electrical protection, and delivers critical information.

MasterPact, ComPact, and PowerPact circuit breakers with communication features also provide 24/7 access to real-time control functions and to monitoring data. These features bring greater efficiency and flexibility in managing your electrical distribution system. However, they may be subject to cyber attacks.

MasterPact MTZ Circuit Breaker and Operating Environment

The following figure shows the various ways of communicating with the MicroLogic X control unit of the MasterPact MTZ circuit breaker.

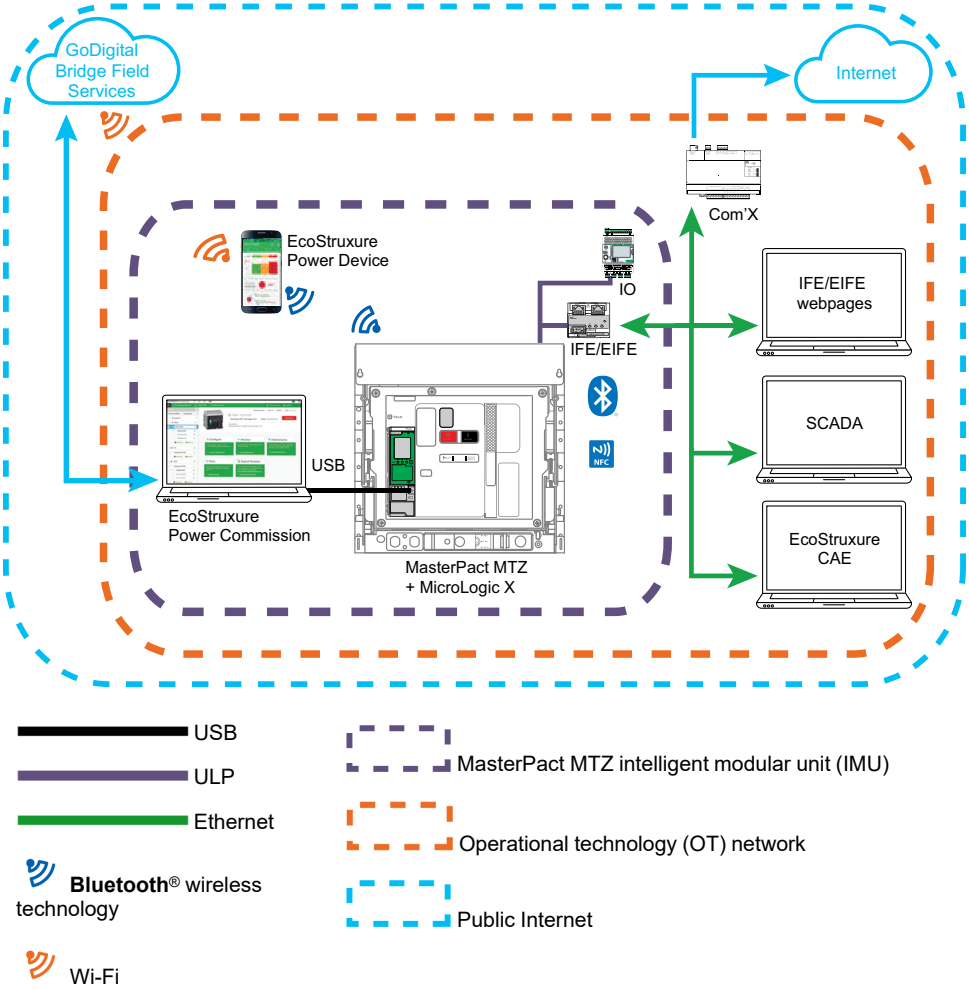

The MasterPact MTZ intelligent modular unit (IMU) represents the circuit breaker, the MicroLogic X control unit, and the associated ULP modules, communication interface, and IO modules.

To communicate with the MasterPact MTZ circuit breaker through its MicroLogic X control unit, the following communication paths are available:

- MicroLogic X human-machine interface (HMI)
- Wireless NFC connection from a smartphone

- Wireless Bluetooth Low Energy connection from a smartphone
- Connection to the mini type B USB port of the MicroLogic X control unit from:
  - A PC running EcoStruxure™ Power Commission software.
  - A smartphone running the EcoStruxure Power Device app
- Ethernet (Modbus TCP/IP or IEC 61850 protocols) connection through the operational technology (OT) network when the IFE or EIFE interface is present
- Modbus-SL connection through the operational technology (OT) network when the IFM interface is present.

MasterPact NT/NW, ComPact NS, and PowerPact P- and R-Frame Circuit Breaker and Operating Environment

The following figure shows the various ways of communicating with the MicroLogic trip unit of the circuit breaker.

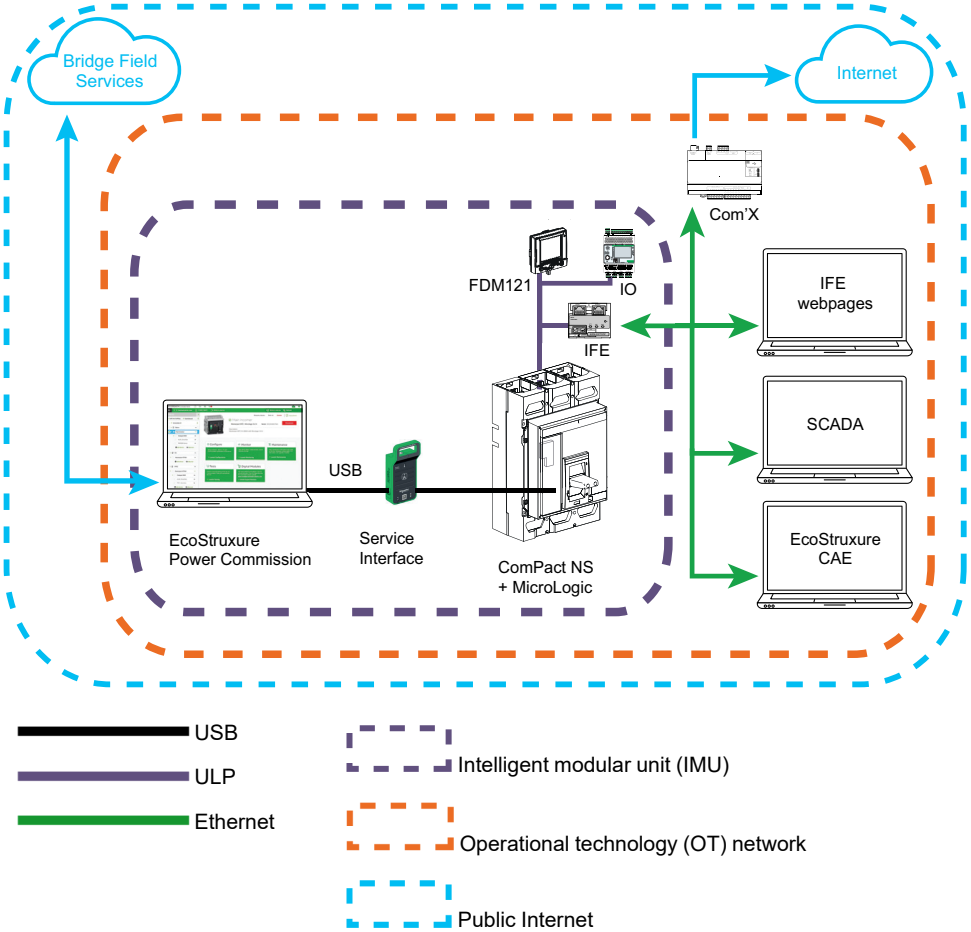

The intelligent modular unit (IMU) represents the MasterPact NT/NW, ComPact NS, or PowerPact P- or R-Frame circuit breaker, the MicroLogic trip unit, and the associated ULP modules, communication interface, and IO modules.

To communicate with the circuit breaker through its MicroLogic trip unit, the following communication paths are available:

- MicroLogic human-machine interface (HMI)
- FDM121 front display module for one circuit breaker
- Connection to the MicroLogic trip unit from a PC running EcoStruxure Power Commission software through the Service interface
- Ethernet (Modbus TCP/IP protocol) connection through the operational technology (OT) network when the IFE interface is present

- Modbus-SL connection through the operational technology (OT) network when the IFM interface is present.

ComPact NSX, and PowerPact H-, J- and L-Frame Circuit Breaker and Operating Environment

The following figure shows the various ways of communicating with the MicroLogic trip unit of the circuit breaker.

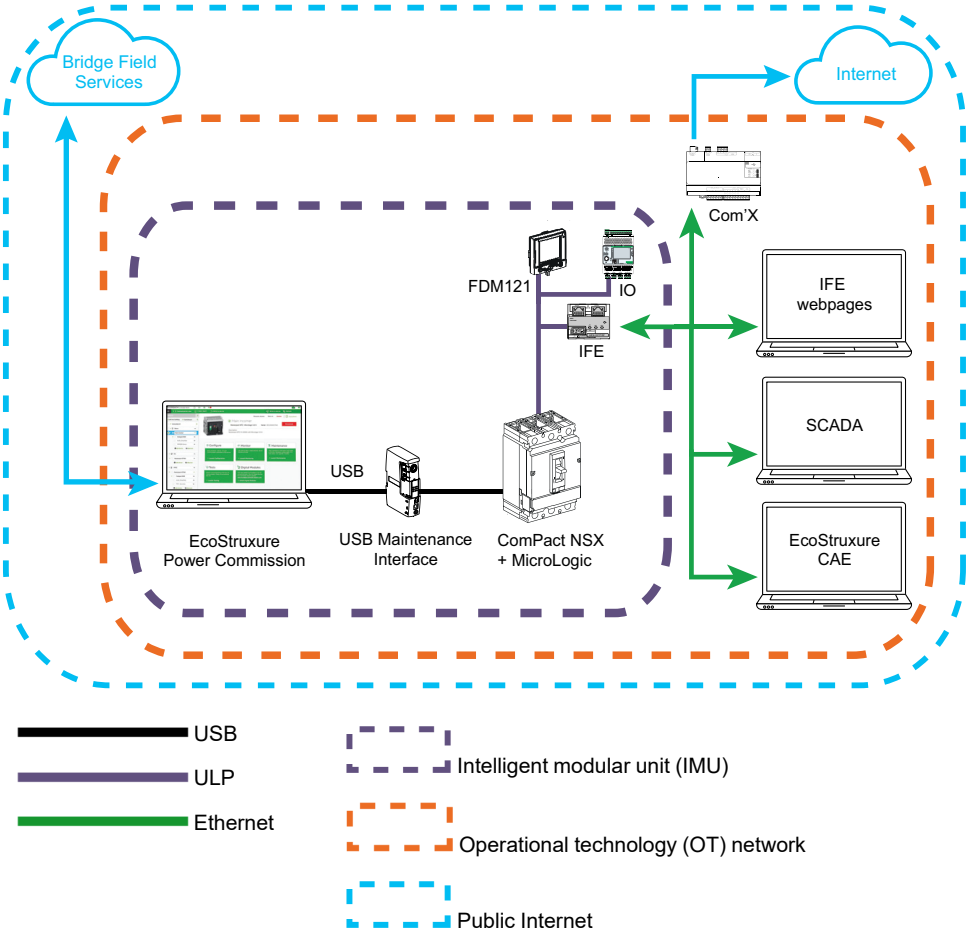

The intelligent modular unit (IMU) represents the ComPact NSX or PowerPact H-, J- or L-Frame circuit breaker, the MicroLogic trip unit, and the associated ULP modules, communication interface, and IO modules.

To communicate with the circuit breaker through its MicroLogic trip unit, the following communication paths are available:

- MicroLogic human-machine interface (HMI)
- FDM121 front display module for one circuit breaker
- Connection to the MicroLogic trip unit from a PC running EcoStruxure Power Commission software through the USB maintenance interface
- Ethernet (Modbus TCP/IP protocol) connection through the operational technology (OT) network when the communication interface is present
- Modbus-SL connection through the operational technology (OT) network when the IFM interface is present.

System Vulnerability to Cyber Attacks

Each of the communication paths listed above represents a potential vulnerable point in your system if security measures are not put in place. This guide provides

guidelines to help secure these communication paths to avoid intentional attacks or accidental misuse.

The following security features are intended to mitigate the inherent threats which are linked to the usage of IFE and EIFE interfaces and MasterPact, ComPact, and PowerPact devices in an Operational Technology (OT) environment.

Security Features Provided

The following cybersecurity functions are supported by MasterPact, ComPact, and PowerPact IMUs:

- User account management (on IFE and EIFE interfaces)
- Access code protection
- Configurable security services and settings
- Firmware update mechanism

These features provide security capabilities which contribute towards protecting the product from potential security threats that could :

- disrupt the product operation (availability)
- modify information (integrity)
- disclose confidential information (confidentiality)

Cybersecurity Recommendations for System Design, Planning and Installation

What's in This Part

Identifying and Protecting Sensitive and Critical Information and Operations 17
Designing a Password Policy 19
Training 22

Chapter Overview

This chapter provides important information to consider during the design, planning, and installation phases of an operational technology (OT) network that includes the MasterPact, ComPact, and PowerPact intelligent modular unit (IMU). The recommendations and guidelines in this chapter help to build a secure operating environment.

Identifying and Protecting Sensitive and Critical Information and Operations

Overview

When planning and designing an operational technology network, it is important to identify information that is critical or sensitive for your operations. Once identified, this information must be protected.

As a general principle:

- Critical information includes data and operations accessible through the MasterPact, ComPact, and PowerPact IMU (for example, status of the circuit breaker, trip, or open/close command).
- Sensitive information includes any information that can be used to access your installation and your operational technology network (for example, passwords or access codes for equipment or for locked rooms).

It is your responsibility to determine how this information could be analyzed and used against your organization best interest.

Information About the Enterprise Communication Network

Sensitive information that can be used to access your installation and control network includes:

- Your system architecture
- IP addresses or MAC addresses of networked communicating devices
- Port numbers used for Ethernet communication
- User IDs and user passwords

This list is not exhaustive, and it is important to consider all information specific to your organization that can facilitate access to critical systems.

Access Control

An important part of cybersecurity consists in designing an effective access control policy. Access control consists in identifying groups of users or individual employees within your organization, and determining the type and the level of access they need to carry out their jobs effectively.

Summary of Information and Operations Accessible Through Each Access Path

Depending on the communication interface or the communication path used to access the MasterPact, ComPact, and PowerPact intelligent modular unit (IMU), the information and control operations available are different.

The following table summarizes access to information and control operations through the MasterPact MTZ IMU:

Information and control operations	**Local access**				**Remote access**
	MicroLogic HMI	**NFC**	**Bluetooth Low Energy technology**	**USB**	**Ethernet / Modbus-SL**
Data monitoring	Read	Read	Read	Read	Read
Protection settings	Read/Write	Read	Read/Write	Read/Write	Read/Write
Other settings	Read/Write	Read	Read/Write	Read/Write	Read/Write
Open/Close/Reset	No	No	Yes	Yes	Yes

The following table summarizes access to information and control operations through the MasterPact NT/NW, ComPact NS, and PowerPact P- and R-Frame IMU:

Information and control operations	**Local access**			**Remote access**
	MicroLogic HMI	**FDM121 display**	**Test port**	**Ethernet / Modbus-SL**
Data monitoring	Read	Read	Read	Read
Protection settings	Read/Write	Read	Read/Write	Read/Write
Other settings	Read/Write	Read	Read/Write	Read/Write
Open/Close/Reset	No	Yes	Yes	Yes

The following table summarizes access to information and control operations through the ComPact NSX and PowerPact H-, J-, and L-Frame IMU:

Information and control operations	**Local access**			**Remote access**
	MicroLogic HMI	**FDM121 display**	**Test port**	**Ethernet / Modbus-SL**
Data monitoring	Read	Read	Read	Read
Protection settings	Read/Write	Read	Read/Write	Read/Write
Other settings	Read/Write	Read	Read/Write	Read/Write
Open/Close/Reset	No	Yes	Yes	Yes

For information on protecting each communication interface and access path, see the recommendations for local access, page 23 or for remote access, page 35, as appropriate.

Designing a Password Policy

Overview

A carefully designed password policy is the first line of defense against cyber attacks.

In the context of installations that include the MasterPact, ComPact, and PowerPact circuit breaker with a MicroLogic trip unit or control unit, passwords are required for:

- Performing intrusive commands on the MicroLogic control unit, whatever the access mode (through Modbus-TCP / Modbus-SL, USB connection, or Bluetooth wireless technology)
- Performing intrusive commands on the MicroLogic trip unit, whatever the access mode (through Modbus-TCP / Modbus-SL, FDM121 display, or test port)
- Logging in to the PC that runs EcoStruxure Power Commission software
- Logging in to IFE and EIFE interface webpages
- Logging in to IFE server webpages
- Logging in to FTP server for IEC 61850 configuration of the IFE and EIFE interfaces from a MasterPact MTZ IMU

Cybersecurity Recommendations Concerning Password Policy

⚠ WARNING

POTENTIAL COMPROMISE OF SYSTEM AVAILABILITY, INTEGRITY, AND CONFIDENTIALITY

Change default passwords at first use to help prevent unauthorized access to device settings, controls, and information.

Failure to follow these instructions can result in death, serious injury, or equipment damage.

The password policy is one of the main elements of the cybersecurity policy. A good password policy consists of:

- Using strong passwords
- Changing passwords regularly
- Using a password vault to manage access passwords
- Forbidding reuse of old passwords
- Regularly reminding users about best practices concerning passwords

To help protect your system, at a minimum you should:

- Enforce the use of strong passwords
- Set the minimum password length to 10 characters
- Change the password periodically

All users must be aware of best practices concerning passwords. These include:

- Not sharing personal passwords
- Not displaying passwords during password entry
- Not transmitting passwords in email or by any other means
- Not saving the passwords on PCs or other devices

Password for MicroLogic Critical Settings and Controls

When accessing the MicroLogic trip unit or control unit via a communication interface, any intrusive commands that modify the behavior of the MasterPact, ComPact, and PowerPact circuit breaker require a password. For example, making changes to the protection settings, or operating the circuit breaker requires the MicroLogic password.

Four passwords are defined for a MicroLogic trip unit or control unit, one for each of the following four user profiles:

- Administrator
- Services
- Engineer
- Operator

For more information on user profiles, refer to the MicroLogic User Guides, page 7.

When connecting through the EcoStruxure Power Device app or EcoStruxure Power Commission software, the user is prompted to provide one of these passwords.

When connecting from a remote monitoring and control interface, the password must be part of the communication request.

The password is composed of four ASCII characters. The password is case-sensitive and the allowed characters are:

- Digits from 0 to 9
- Lower case letters from a to z
- Upper case letters from A to Z

Default passwords must be changed at first installation of the MasterPact, ComPact, and PowerPact circuit breaker and periodically after the first installation, using EcoStruxure Power Commission software. Store passwords using a password vault. Only share passwords with a limited number of trusted users. Follow the password policy recommendations where applicable.

Passwords and User IDs for Networked PCs

PCs that run EcoStruxure Power Commission software, or that access the MicroLogic trip unit or control unit using any other means (for example, IFE webpages, or SCADA), must prompt users for a login and password. You must ensure that users define strong passwords and change them periodically. In addition, you must set a timer to lock the PC screen automatically after a period of idle time.

A strong password includes uppercase and lowercase letters, numbers, and special characters, where these are available. It should have a minimum length of 10 characters.

Follow the password policy recommendations where applicable.

Passwords for IFE Interface Webpages and EIFE Interface Webpages, and IFE and EIFE FTP Server

Access to the IFE interface webpages, EIFE interface webpages, and IFE and EIFE FTP server is checked by Role-Based Access Control (RBAC) mechanism.

With RBAC, users are assigned a role that defines the features they can access.

The security administrator of your system lists the system users and assigns a role to each of them.

The security administrator can manage the users of the IFE or EIFE interface:

- On the IFE or EIFE interface webpages
- With the EcoStruxure Cybersecurity Admin Expert (CAE) software

The security administrator can use CAE software to define the security policy of the system.

The security policy applies to all elements of the system that are compatible with CAE software. For low voltage systems, it applies to the IFE and EIFE interfaces in the system.

The security administrator can set the following parameters of the security policy with CAE software:

- Minimum inactivity period. After the duration without any action from the user, IFE or EIFE interface webpages are locked. The user must re-enter their password to unlock it.
- Maximum number of login attempts
- Locking period duration

For more information, refer to NRJUSG18807EN *EcoStruxure Cybersecurity Admin Expert User Guide*.

Passwords for IFE Server Webpages

Each user of the IFE server webpages has a personal user ID and password to log in to the webpages. A user must change the password after logging in to the webpages for the first time.

You must define which users in your organization require a login on the IFE server webpages, and follow the password policy recommendations where applicable.

Training

Overview

Employee awareness and training is an extremely important foundational part of any cybersecurity strategy. You must ensure that all users who are granted access to the OT communication network for your installation are aware of the corporate security information policy. You must also ensure that they have received adequate training in performing their tasks in compliance with that policy.

In particular, users must be aware, and regularly reminded of best practices concerning:

- Not sharing sensitive information such as passwords or access codes for equipment or for locked rooms
- Keeping PCs safely locked away when not in use
- Ensuring smartphones that can be used to access the system are kept with them at all times and are protected against hacking over Bluetooth wireless technology or over the Internet
- Not circumventing any security polices for reasons of convenience

For further information on designing and implementing a good training policy, refer to *How Can I Reduce Vulnerability to Cyber Attacks?*.

Cybersecurity Recommendations for Local Access

What's in This Part

Restricting Local Access to the MasterPact, ComPact, and PowerPact Circuit Breaker 24
Recommendations for Protecting Local Access to the MicroLogic HMI 25
Recommendations for Protecting Access Through NFC (MasterPact MTZ) 26
Recommendations for Protecting Access Through Bluetooth® Wireless Technology (MasterPact MTZ) 28
Recommendations for Protecting Access to the MicroLogic X Control Unit Through Mini USB Port (MasterPact MTZ) 30
Recommendations for Protecting Access to the MicroLogic Trip Unit Through Test Port 32
Recommendations for Protecting Access to the MicroLogic Trip Unit Through FDM121 Display 34

Chapter Overview

This chapter lists the local access paths to the MasterPact, ComPact, and PowerPact circuit breaker. It also provides recommendations for securing these access paths. These are important considerations for operation.

Restricting Local Access to the MasterPact, ComPact, and PowerPact Circuit Breaker

Overview

The MasterPact, ComPact, and PowerPact intelligent modular unit (IMU) offers both local and remote access possibilities. You must ensure that only authorized users are granted access.

Local Access to MasterPact, ComPact, and PowerPact Circuit Breaker

Local access to the MasterPact, ComPact, and PowerPact intelligent modular unit provides various possibilities for accessing information about the system and controlling it.

Therefore, it is important to restrict local access to the MasterPact, ComPact, and PowerPact circuit breaker by installing it in a locked area to avoid:

- Unauthorized access to the MicroLogic HMI with the risk of changes to settings from the HMI
- Unauthorized access to wireless Bluetooth communication with the risk of changes to settings from EcoStruxure Power Device app
- Unauthorized access to wireless NFC communication with the risk of data disclosure
- Unauthorized connection through the mini USB port on the MicroLogic control unit with the risk of changes to settings from EcoStruxure Power Commission software or smartphone with EcoStruxure Power Device app
- Unauthorized connection through the test port on the MicroLogic trip unit with the risk of changes to settings from EcoStruxure Power Commission software using the Service Interface or USB Maintenance Interface
- Unauthorized access to the IO module with the risk of changes to the switch setting for the predefined application in use

It is also important to implement rules for managing access to the locked area. In particular, you must ensure that:

- The area is kept locked at all times.
- The area is equipped with an authentication and authorization system.
- Only authorized personnel have a key or access code.
- The communication network cables entering the room and the connection ports on communicating devices outside the room are protected.
- All devices such as PCs, smartphones, and tablets that access the MicroLogic trip unit or control unit are hardened following the latest vendor guidelines.

When the MasterPact, ComPact, and PowerPact circuit breaker is installed in a locked area, you must implement an emergency opening process. For example:

- Equip that area with at least one emergency stop button accessible from outside
- Equip the circuit breaker with an MN undervoltage release (failsafe system)

Recommendations for Protecting Local Access to the MicroLogic HMI

Functions Accessible from HMI

Any person having access the enclosure where the circuit breaker is located has access to the MicroLogic HMI.

Some critical functions such as the protection settings for the equipment can be configured from the MicroLogic HMI.

Recommendations for Protecting Access Through the MicroLogic HMI

The MicroLogic HMI is not password protected and not all MicroLogic HMI are capable of being physically locked to prevent access to the display screen. Therefore, to protect access to the HMI, you must:

- Seal the protective cover on the MicroLogic HMI, if the cover is capable of being sealed.
- Install the circuit breaker in a locked area.
- Keep that area locked at all times.
- Give the key or access code to authorized personnel only.

For further information on protecting access to the circuit breaker, refer to Implementing a Restricted Access Policy, page 24.

Locking Protection Settings

You can lock the protection settings of the circuit breaker to prevent them from being changed locally on the HMI. By default, changing the protection settings from the HMI is allowed.

It is recommended to disable local modification of protection settings on the HMI if you do not use this function. For more information, refer to the MicroLogic user guides, page 7.

Recommendations for Protecting Access Through NFC (MasterPact MTZ)

Functions Accessible Through NFC

Through wireless near field communication (NFC), diagnostic data can be downloaded from the MicroLogic X control unit to a smartphone, even when the control unit is not powered. It is not possible to change any settings on the control unit, nor to open, close, or reset the MasterPact MTZ circuit breaker.

Prerequisites for Establishing an NFC Connection

To establish a wireless NFC connection with the MicroLogic X control unit, the prerequisites are:

- You must have physical access to the room where the MasterPact MTZ circuit breaker is located, and to the equipment enclosure.
- You must have EcoStruxure Power Device app installed on your smartphone,
- The smartphone must support NFC.

Any person who meets these conditions can download data that may be confidential for your operation. In the MicroLogic X control unit, there is no record of connections established through NFC.

For the detailed procedure on how to establish an NFC connection, refer to *MasterPact MTZ - MicroLogic X Control Unit - User Guide* , page 7.

General Recommendations for Protecting Access Through NFC

To protect access to data accessible through wireless NFC, it is recommended to:

- Install the MasterPact MTZ circuit breaker in a locked area so that only authorized person can access the MicroLogic X control unit.
- Keep that area locked at all times.
- Give the key or access code to authorized personnel only.

For further information, see the recommendations for restricting local access to the MasterPact MTZ circuit breaker, page 24.

Recommendations for NFC Communication

To protect access to functions accessible through wireless NFC, it is recommended to:

- Disconnect the smartphone from the Internet (for example, by setting it to flight mode) during an NFC connection with the MicroLogic X control unit.
- Do not enter a pairing code if prompted for it, because it is not required for an NFC connection.

Recommendations for Using EcoStruxure Power Device app

To restrict access to the MicroLogic X control unit from a smartphone running EcoStruxure Power Device app, it is recommended to use only the official Schneider Electric EcoStruxure Power Device app to connect to the MasterPact MTZ circuit breaker.

Recommendations for Using Smartphones

To restrict access to the MicroLogic X control unit from a smartphone, it is recommended to:

- Make sure that the smartphones that have the EcoStruxure Power Device app are password protected and used for work only.
- Harden the smartphones that have the EcoStruxure Power Device app by implementing all of the security features recommended by the smartphone vendor or manufacturer.
- Keep antivirus applications for smartphones up to date.
- Do not disclose information about the smartphone (telephone number, MAC address) if it is not necessary.
- Disconnect the smartphone from the Internet (for example, by setting it to flight mode) during an NFC connection with the MicroLogic X control unit.
- Do not store sensitive information on smartphones.

Recommendations for Protecting Access Through Bluetooth® Wireless Technology (MasterPact MTZ)

Functions Accessible Through Bluetooth Wireless Technology

NOTICE

RISK OF UNINTENDED OPERATION

- The device must only be configured and set by qualified personnel, using the results of the installation protection system study.
- During commissioning of the installation and following any modification, check that the MicroLogic X configuration and protection function settings are consistent with the results of this study.
- MicroLogic X protection functions are set by default to the minimum value, except for the long time protection function which is set to the maximum value, by default.

Failure to follow these instructions can result in equipment damage.

Using Bluetooth Low Energy wireless technology, you can access the MicroLogic X control unit from a smartphone running EcoStruxure Power Device app. This application offers a task-oriented interface with the control unit. Data transferred over Bluetooth wireless technology is encrypted using AES 128-bit encryption algorithm.

Prerequisites for Establishing a Bluetooth Connection

To establish a Bluetooth wireless connection with the MicroLogic X control unit, the prerequisites are:

- The MicroLogic X control unit must be powered on.
- The Bluetooth function must be enabled on the MicroLogic X control unit.
- Only one smartphone at a time can connect to a control unit.
- You must have a smartphone with EcoStruxure Power Device app installed.
- The smartphone must support Bluetooth Low Energy wireless technology (4.0 or above).
- You must have access to the MicroLogic X control unit to activate the Bluetooth function by pressing the activation pushbutton, and be physically within range (usually within 20 to 30 meters or yards) for the duration of the connection.
- You must enter the 6-digit pairing code randomly generated by the MicroLogic X control unit and displayed on the MicroLogic X HMI.

Any person who meets these conditions, and establishes a connection, has access to functions which can impact your installation.

For detailed procedures on how to establish a Bluetooth connection, refer to *MasterPact MTZ - MicroLogic X Control Unit - User Guide* , page 7.

General Recommendations for Protecting Access Through Bluetooth Wireless Technology

To protect access to functions accessible through Bluetooth wireless technology, it is recommended to:

- Install the MasterPact MTZ circuit breaker in a locked area so that only authorized person can access the MicroLogic X control unit.

- Keep that area locked at all times.
- Give the key or access code to authorized personnel only.

For further information on protecting access to the MasterPact MTZ circuit breaker, refer to Implementing a Restricted Access Policy, page 24.

Recommendations for Using Bluetooth Wireless Technology

The implementation of the Bluetooth function complies with the NIST Special Publication 800-121 Revision 1. Nevertheless, to protect access to functions accessible through Bluetooth wireless technology, it is recommended to:

- Disable the Bluetooth function on the MicroLogic X control unit, and enable it only when you are ready to establish a connection.

  For detailed procedures on how to disable the Bluetooth function, refer to *MasterPact MTZ - MicroLogic X Control Unit - User Guide* , page 7.
- Set the Bluetooth function disconnection timer to 5 minutes.
- Except when you are starting a Bluetooth connection, the Bluetooth function must not be activated from the activation pushbutton on the front face of the MicroLogic X control unit. The Bluetooth function must remain off when not in use.
- Press the Bluetooth pushbutton to end the communication when you have finished.
- Pairing must be done only when necessary and in a secure area.
- Do not enter a pairing code if unexpectedly prompted for it.
- During Bluetooth pairing, keep the smartphone as close as possible to the MicroLogic X control unit.

Recommendations for Using EcoStruxure Power Device app

To restrict access to the MicroLogic X control unit from a smartphone running EcoStruxure Power Device app, it is recommended to use only the official Schneider Electric EcoStruxure Power Device app to connect to the MasterPact MTZ circuit breaker.

Recommendations for Using Smartphones

To restrict access to the MicroLogic X control unit from a smartphone, it is recommended to:

- Make sure that the smartphones that have the EcoStruxure Power Device app are password protected and used for work only.
- Harden the smartphones that have the EcoStruxure Power Device app by implementing all of the security features recommended by the smartphone vendor or manufacturer.
- Keep antivirus applications for smartphones up to date.
- Do not disclose information about the smartphone (telephone number, MAC address) if it is not necessary.
- Disconnect the smartphone from the Internet during a Bluetooth connection with the MicroLogic X control unit.
- Do not store sensitive information on smartphones.

Recommendations for Protecting Access to the MicroLogic X Control Unit Through Mini USB Port (MasterPact MTZ)

Functions Accessible Through Mini USB Port

It is possible to access the functions of the MicroLogic X control unit by:

- Connecting a PC running EcoStruxure Power Commission software to the mini USB port of the control unit.
- Connecting a smartphone running EcoStruxure Power Device app to the mini USB port of the control unit through a USB OTG adapter.

Note that the mass storage function is not implemented in the control unit. Therefore, it is not possible to attack the system by downloading malware from a USB key or other mass storage device.

Prerequisites for Establishing a USB or USB OTG Connection

To establish a USB connection with the MicroLogic X control unit, the prerequisites are:

- You must have physical access to the room where the MasterPact MTZ circuit breaker is located.
- For a connection from a PC:
  - You must have a USB cable with a mini USB connector to connect your PC to the mini USB port on the MicroLogic X control unit.
  - You must have a PC running EcoStruxure Power Commission software.
- For a connection from a smartphone:
  - You must have an OTG adapter and a USB cable with a mini USB connector to connect your smartphone to the mini USB port on the MicroLogic X control unit.
  - You must have a smartphone running EcoStruxure Power Device app.

General Recommendations for Protecting Access Through Mini USB Port

To protect access to functions accessible through the mini USB port on the MicroLogic X control unit, it is recommended to:

- Install the MasterPact MTZ circuit breaker in a locked area so that only authorized person can access the MicroLogic X control unit.
- Keep that area locked at all times.
- Give the key or access code to authorized personnel only.

For further information, see the recommendations for restricting local access to the MasterPact MTZ circuit breaker, page 24.

Recommendations for PCs Running EcoStruxure Power Commission Software

To protect access to the MicroLogic X control unit from PC connected locally to the mini USB port on the front of the control unit, it is recommended to:

- Keep PCs safely locked away when not in use.

- Make sure that PCs that run the EcoStruxure Power Commission software require a user login and password.
- Enforce the use of strong passwords, page 19.
- Make sure that user passwords are changed regularly.
- Forbid reuse of old passwords.
- Set a timer to lock the PC screen after a period of idle time.
- Harden PCs following the most recent vendor guidelines for the operating system running on your PC.
- Limit the number of users allowed to use EcoStruxure Power Commission software.
- Keep antivirus applications for PCs up to date.

Recommendations for Smartphones Running EcoStruxure Power Device app

To protect access to the MicroLogic X control unit from a smartphone connected locally to the mini USB port on the front of the control unit, it is recommended to:

- Make sure that the smartphones running EcoStruxure Power Device app are password protected and used for work only.
- Harden the smartphones running EcoStruxure Power Device app by implementing all of the security features recommended by the smartphone vendor or manufacturer.
- Keep antivirus applications for smartphones up to date.
- Do not disclose information about the smartphone (telephone number, MAC address) if it is not necessary.
- Disconnect the smartphone from the internet during a USB OTG connection with the MicroLogic X control unit.
- Do not store sensitive information on smartphones.

Recommendations for Configuring IEC 61850

It is recommended to use FTPS protocol (rather than FTP) to upload the IEC 61850 configuration file to the IFE or EIFE interface. If FTPS is not supported by your application, it is recommended to keep the FTP protocol deactivated and only activate it during the upload of the IEC 61850 configuration file.

Recommendations for Protecting Access to the MicroLogic Trip Unit Through Test Port

Functions Accessible Through Test Port via USB Maintenance Interface

It is possible to access the functions of the MicroLogic trip unit by connecting a PC running EcoStruxure Power Commission software to the test port of the trip unit through the USB maintenance interface.

The USB maintenance interface allows you to connect a PC running EcoStruxure Power Commissionsoftware to the test port of the trip unit in order to carry out the complete range of checks, tests and adjustments on the MicroLogic trip unit.

The USB maintenance interface is compatible with the following devices:

- ComPact NSX circuit breakers
- PowerPact H, J, and L-Frame circuit breakers

Functions Accessible Through Test Port via Service Interface

It is possible to access the functions of the MicroLogic trip unit by connecting a PC running EcoStruxure Power Commission software to the test port of the trip unit through the Service interface.

The service interface allows you to connect a PC running EcoStruxure Power Commissionsoftware to the test port of the trip unit in order to carry out the complete range of checks, tests and adjustments on the MicroLogic trip unit.

The service interface is compatible with the following devices:

- MasterPact NT/NW circuit breakers
- ComPact NS circuit breakers
- PowerPact P and R-Frame circuit breakers

General Recommendations for Protecting Access Through Test Port

To protect access to functions accessible through the test port on the MicroLogic trip unit, it is recommended to:

- Install the MasterPact NT/NW , ComPact or PowerPact circuit breaker in a locked area so that only authorized person can access the MicroLogic trip unit.
- Keep that area locked at all times.
- Give the key or access code to authorized personnel only.

For further information, see the recommendations for restricting local access to the MasterPact, ComPact, and PowerPact circuit breaker, page 24.

Recommendations for PCs Running EcoStruxure Power Commission Software

To protect access to the MicroLogic trip unit from PC connected locally to the test port on the front of the trip unit, it is recommended to:

- Keep PCs safely locked away when not in use.

- Make sure that PCs that run the EcoStruxure Power Commission software require a user login and password.
- Enforce the use of strong passwords, page 19.
- Make sure that user passwords are changed regularly.
- Forbid reuse of old passwords.
- Set a timer to lock the PC screen after a period of idle time.
- Harden PCs following the most recent vendor guidelines for the operating system running on your PC.
- Limit the number of users allowed to use EcoStruxure Power Commission software.
- Keep antivirus applications for PCs up to date.

Recommendations for Protecting Access to the MicroLogic Trip Unit Through FDM121 Display

Functions Accessible Through FDM121 Display

It is possible to access the functions of the MicroLogic trip unit from the FDM121 display connected to the IMU.

The FDM121 display shows measurements, alarms, and operating assistance data from the IMU. The FDM121 display can be used to control:

- A circuit breaker equipped with a motor mechanism
- The pre-defined application performed by the IO module.

The FDM121 display is compatible with the following devices:

- MasterPact NT/NW circuit breakers
- ComPact NSX circuit breakers
- ComPact NS circuit breakers
- PowerPact P and R-Frame circuit breakers
- PowerPact H, J, and L-Frame circuit breakers

General Recommendations for Protecting Access Through FDM121 Display

To protect access to functions accessible on the FDM121 display , it is recommended to:

- Install the MasterPact NT/NW , ComPact or PowerPact circuit breaker and the associated FDM121 display in a locked area so that only an authorized person can access the FDM121 display
- Keep that area locked at all times.
- Give the key or access code to authorized personnel only.

For further information, see the recommendations for restricting local access to the MasterPact NT/NW , ComPact or PowerPact circuit breaker, page 24.

Cybersecurity Recommendations for Remote Access

What's in This Part

Restricting Remote Access to the MasterPact, ComPact, and PowerPact Circuit Breaker 36
Separating OT Network from Corporate Network 38
Recommendations for Protecting Remote Access to the MicroLogic Trip Unit or Control Unit Through Ethernet 39
Recommendations for Protecting Remote Access to the MicroLogic Trip Unit or Control Unit Through Modbus-SL 41

Chapter Overview

This chapter lists the remote access paths to the MasterPact, ComPact, and PowerPact circuit breaker. It also provides recommendations for securing these access paths. These are important considerations for operation.

Restricting Remote Access to the MasterPact, ComPact, and PowerPact Circuit Breaker

Overview

The MasterPact, ComPact, and PowerPact intelligent modular unit (IMU) offers both local and remote access possibilities. You must ensure that only authorized users are granted access.

Remote Access to MasterPact, ComPact, and PowerPact Circuit Breaker

Depending on your system architecture, there are probably several ways of gaining remote access to the MasterPact, ComPact, and PowerPact circuit breaker.

It is extremely important to control remote access to your system, as remote access through the following communication pathways can give full control over your installation:

- EcoStruxure Power Commission software through an Ethernet connection via an IFE, EIFE, or IFM interface
- EcoStruxure Power Commission software through Modbus-SL via an IFM interface
- IFE or EIFE webpages through an Ethernet connection via an IFE or EIFE interface

In particular, you must consider:

- How the system can be accessed using the various communication paths available, page 12
- The information and controls available through each access path, page 18

Supported Protocols

The IFE and EIFE interfaces support the following communication protocols:

- HTTPS for configuration through embedded webpages
- Modbus TCP/IP for communication with other OT devices
- DHCP for network IP addressing
- DNS for network name resolution
- SNTP for time synchronization
- DPWS for network delivery
- SMTPS for sending emails
- FTPS for IEC 61850 configuration and event notification
- IEC 61850 for communication with devices and systems in substations

The IFM interface supports Modbus-SL communication protocol.

MasterPact MTZ applications support the following communication protocols:

- Bluetooth wireless technology for communication with EcoStruxure Power Device app
- NFC to download diagnostic data

Enabling and Disabling Remote Control of the MasterPact, ComPact, and PowerPact Circuit Breaker

Remote control of the MasterPact, ComPact, and PowerPact circuit breaker refers to the following operations:

- Opening, closing and resetting the circuit breaker
- Modifying the circuit breaker settings

If remote control of the MasterPact, ComPact, and PowerPact circuit breaker is not a requirement, it is highly recommended to disable remote control using the IFE or EIFE interface, IFE server, or IFM interface. By default, remote control is enabled.

On the IFE interface or IFE server, use the locking pad on the front panel to enable or disable remote control commands sent over the Ethernet network.

On the EIFE interface, connect a PC running EcoStruxure Power Commission software to the mini USB port on the front of the MicroLogic X control unit to enable or disable remote control of the MasterPact MTZ circuit breaker through the Ethernet network.

On the IFM interface, use the locking pad on the front panel to enable or disable remote controls sent over the Modbus-SL network.

Locking Protection Settings (MasterPact MTZ)

You can lock the protection settings of the MasterPact MTZ circuit breaker to prevent them from being changed remotely. By default, changing the protection settings remotely is allowed.

It is recommended to disable remote modification of protection settings if you do not use this function. For more information, refer to *MasterPact MTZ - MicroLogic X Control Unit - User Guide* , page 7.

Disabling the Unused IP Network Services

The communication ports on the IFE or EIFE interface can be disabled from the IFE or EIFE interface webpages.

It is recommended to:

- Disable the unused communication ports of the IFE or EIFE interface.
- Access the IFE or EIFE interface webpages using HTTPS service instead of HTTP.

Using the Access Control List (ACL)

When remote control is necessary, it is recommended to use the IP filtering capability of the IFE and EIFE interfaces to list the IP addresses of the applications (for example, SCADA) that are authorized to communicate with the IMU. The list of authorized applications is the access control list (ACL).

Separating OT Network from Corporate Network

Overview

In the design and implementation of your operational technology network, you must use segregation mechanisms to keep it separate from your corporate network. This helps restrict access to the MasterPact, ComPact, and PowerPact intelligent modular unit.

In particular, you must consider:

- Using firewalls
- Creating demilitarized zones
- Using intrusion detection system (IDS) and/or intrusion prevention system (IPS) solutions
- Implementing security policies and training programs
- Defining incident response procedures

Guidelines for designing an operational technology network, and keeping it separate from the corporate intranet are issued and updated by specialized organizations (for example, NIST) and standardization bodies (for example, ISO, IEC/IEEE). Refer to these publications to address the points listed above.

In addition to the above precautions, you must also follow the general guidelines and recommendations for segregating your networks given in *How Can I Reduce Vulnerability to Cyber Attacks?*.

Recommendations for Protecting Remote Access to the MicroLogic Trip Unit or Control Unit Through Ethernet

Functions Accessible Through Ethernet

When a PC running monitoring and control software (SCADA, EcoStruxure Power Commission software) is connected to the Ethernet (Modbus/TCP) network, the functions of the MicroLogic trip unit or control unit are accessible in the following cases:

- The MasterPact, ComPact, or PowerPact circuit breaker is connected through an IFE interface or an IFE server.
- The MasterPact MTZ circuit breaker is connected through the EIFE interface.
- The MasterPact, ComPact, or PowerPact circuit breaker is connected through an IFM interface stacked to an IFE server.

Prerequisites for Establishing an Ethernet Connection

To establish an Ethernet connection with the MicroLogic trip unit or control unit, the prerequisites are:

- The MicroLogic trip unit or control unit must be powered on.
- The MicroLogic trip unit or control unit must be connected to an Ethernet network through one of the following:
  - An IFE or an EIFE interface
  - An IFE server
  - An IFM interface stacked to an IFE server
- You must have a PC or other device (for example, FDM128 display, or PLC) running monitoring and control software (SCADA, EcoStruxure Power Commission) connected to the Ethernet network, giving remote access
- You must have a PC running a web browser connected to the Ethernet network, giving access to the IFE or EIFE webpages
- You must have a user ID and password with the appropriate access permissions to log in to:
  - IFE and EIFE interface webpages
  - IFE server webpages
  - IFE and EIFE FTP server
- You must have a user ID and password with the appropriate access permissions to log in to EcoStruxure Power Commission software

Recommendations for PCs Connected to Ethernet

To protect access to the MicroLogic trip unit or control unit from a networked PC, it is recommended to:

- Keep PCs safely locked away when not in use.
- Make sure that the PC that provides access to the MicroLogic trip unit or control unit using Ethernet (for example, through IFE or EIFE interface webpages, IFE server webpages, or SCADA) requires a user login and password.
- Enforce the use of strong passwords, page 20.
- Use IP filtering capability of IFE and EIFE interfaces and IFE server to allow communication only with selected remote IP addresses.

- Make sure that user passwords are changed regularly.
- Forbid reuse of old passwords.
- Set a timer to lock the PC screen after a period of idle time.
- Harden the PC by following the most recent vendor guidelines for the operating system running on your PC.
- Limit the number of users allowed to access the MicroLogic trip unit or control unit from a networked PC.
- Keep antivirus applications for PCs up to date.

In addition to the above precautions, you must also follow the general guidelines and recommendations for protecting your installation given in *How Can I Reduce Vulnerability to Cyber Attacks?*.

Recommendations for Protecting Remote Access to the MicroLogic Trip Unit or Control Unit Through Modbus-SL

Functions Accessible Through Modbus-SL

When a PC running monitoring and control software (SCADA) is connected to the Modbus-SL network, the functions of the MicroLogic trip unit or control unit are accessible when the MasterPact, ComPact, and PowerPact circuit breaker is connected to an IFM interface.

Prerequisites for Establishing a Modbus-SL Connection

To establish a Modbus-SL connection with the MicroLogic trip unit or control unit, the prerequisites are:

- The MicroLogic trip unit or control unit must be powered on.
- The MicroLogic trip unit or control unit must be connected to an IFM interface.
- You must have a PC or other device (for example, PLC) running monitoring and control software (SCADA) connected to the Modbus-SL network giving remote access.
- You must have a user ID and password with the appropriate access permissions to log in to EcoStruxure Power Commission software.

Recommendations for PCs Connected to Modbus-SL

To protect access to the MicroLogic trip unit or control unit from a networked PC, it is recommended to:

- Keep PCs safely locked away when not in use.
- Make sure that the PC that provides access to the MicroLogic trip unit or control unit using Modbus-SL (for example, through SCADA), requires a user login and password.
- Enforce the use of strong passwords, page 20.
- Make sure that user passwords are changed regularly.
- Forbid reuse of old passwords.
- Set a timer to lock the PC screen after a period of idle time.
- Harden the PC by following the most recent vendor guidelines for the operating system running on your PC.
- Limit the number of users allowed to access the MicroLogic trip unit or control unit from a networked PC.
- Keep antivirus applications for PCs up to date.

In addition to the above precautions, you must also follow the general guidelines and recommendations for protecting your installation given in *How Can I Reduce Vulnerability to Cyber Attacks?*.

Cybersecurity Recommendations for Firmware Updates and Digital Modules

What's in This Part

Installing Firmware Updates 43
Purchasing and Installing Digital Modules (MasterPact MTZ) 45
Schneider Electric Cybersecurity Support Portal 47

Installing Firmware Updates

Overview

An increasingly common cyber attack is the distribution of doctored or illegitimate software packages that may contain modified applications or additional applications. These applications can compromise the integrity of the original software and its intended use.

To help ensure the integrity and authenticity of components of the MasterPact, ComPact, and PowerPact IMU, namely the MicroLogic X control unit, IFE server, IFE or EIFE interface, IFM interface, IO module, and the FDM121 display, Schneider Electric original firmware is digitally signed.

Update firmware using EcoStruxure Power Commission software. You must have the latest version of EcoStruxure Power Commission software. Use EcoStruxure Power Commission software to update firmware through the firmware menu.

Cybersecurity Recommendations Concerning Firmware Updates

⚠ WARNING

RISK OF UNINTENDED OPERATION

- Update your version of EcoStruxure Power Commission software as soon as you receive a notification that an update is available.
- Use this latest version of EcoStruxure Power Commission software to update the firmware of all your products.
- At regular intervals, review the certificate revocation list published on the Schneider Electric official website. If there is a revoked certificate for one of your products, do not install firmware dated prior to the date of the revocation.

Failure to follow these instructions can result in death, serious injury, or equipment damage.

When installing firmware updates for components of the MasterPact, ComPact, and PowerPact IMU, it is recommended to:

- Only use the latest version of the EcoStruxure Power Commission software to download and install firmware updates.
- Harden the PC that runs EcoStruxure Power Commission software by following the most recent vendor guidelines for the operating system.
- Install updates following accepted operational technology (OT) practices such as testing on a non-production environment (if available) for validation before installing and deploying them in your production system.

Refer to the relevant firmware release note, page 7 to check if the latest update provides cybersecurity improvements. If so, updating to this version is recommended.

Signed Firmware

Firmware designed for the MicroLogic X control unit and the ULP modules is signed using the Schneider Electric public key infrastructure (PKI). The digital signatures are authenticated using the public certificate that is present in EcoStruxure Power Commission software.

When firmware is uploaded to a device through EcoStruxure Power Commission software, the digital signature of the update package is also automatically verified. This verification is done using the public certificate present in each device.

For security reasons, public certificates are subject to change. Therefore, you must check that the version of EcoStruxure Power Commission software that you use to download and install firmware updates is the latest version. Having the latest version of EcoStruxure Power Commission software means that the public certificates used to sign firmware are up to date.

Certificates that are no longer valid are published on a certificate revocation list (CRL), available on the Schneider Electric official website.

Benefits of Using EcoStruxure Power Commission Software for Firmware Updates

EcoStruxure Power Commission software plays an important part in helping ensure the integrity of your operational technology network during firmware updates. Use only the latest version of EcoStruxure Power Commission software to download and install firmware because it is the only software that can provide the following benefits:

- When you download firmware packages to the MicroLogic X control unit or ULP module from the official Schneider Electric download center using EcoStruxure Power Commission software, the digital signature of the packages is automatically verified.
- When you upload firmware to the MicroLogic X control unit or ULP module (using EcoStruxure Power Commission software over a USB connection or through an Ethernet connection), the digital signature of the update package is automatically verified.

The automatic verifications done by EcoStruxure Power Commission software rely entirely on the validity of the public certificate that it uses.

Refer to *MicroLogic Trip Units and Control Units - Firmware History*, page 7 for detailed procedures explaining how to update the MicroLogic firmware.

Purchasing and Installing Digital Modules (MasterPact MTZ)

Overview

Digital Modules are optional modules that expand the features available across the range of MicroLogic X control units. They can be purchased along with the MasterPact MTZ circuit breaker in the initial order or at a later date from the Schneider Electric online GoDigital marketplace.

Digital Modules designed for the MicroLogic X control unit are digitally signed for added security using the Schneider Electric public key infrastructure (PKI). The PKI helps to ensure both the authenticity and integrity of these downloads. The Digital Modules must be installed using EcoStruxure Power Commission software.

Cybersecurity Recommendations for Purchasing Digital Modules

To purchase Digital Modules for the MicroLogic X control unit, use only the official Schneider Electric download center GoDigital marketplace.

When installing Digital Modules for the MicroLogic X control unit, it is recommended to:

- Install Digital Modules following accepted operational technology (OT) practices such as testing on a non-production environment for validation before installing and deploying them in your production system.
- Only use the latest version of EcoStruxure Power Commission software to download and install Digital Modules.
- Harden the PCs used to download Digital Modules and to install them following the most recent vendor guidelines for the operating system.

Cybersecurity Recommendations for Installing Digital Modules

⚠ WARNING

RISK OF UNINTENDED OPERATION

- Update your version of EcoStruxure Power Commission software as soon as you receive a notification that an update is available.
- Use this latest version of EcoStruxure Power Commission software to update the firmware of all your products.
- At regular intervals, review the certificate revocation list published on the Schneider Electric official website. If there is a revoked certificate for one of your products, do not install firmware dated prior to the date of the revocation.

Failure to follow these instructions can result in death, serious injury, or equipment damage.

You must use only EcoStruxure Power Commission software to install Digital Modules for the MicroLogic X control unit.

EcoStruxure Power Commission software plays an important part in helping ensure the integrity of your operational technology network. Use only the latest version of EcoStruxure Power Commission software to install Digital Modules because it is the only software that can provide the following benefits:

- When you update the firmware of a device of the IMU using EcoStruxure Power Commission software over a USB connection or Ethernet connection, the digital signature of the firmware update is automatically verified.

- When you upload a Digital Module to the MicroLogic X control unit using EcoStruxure Power Commission software over a USB connection, the digital signature of the Digital Module is automatically verified.

The automatic verifications done by EcoStruxure Power Commission software rely entirely on the validity of the public certificate used.

Refer to DOCA0144EN *MasterPact MTZ - MicroLogic X Control Unit - Firmware Release Note* for detailed procedures explaining how to download and install Digital Modules.

Schneider Electric Cybersecurity Support Portal

Overview

The Schneider Electric cybersecurity support portal outlines the Schneider Electric vulnerability management policy.

The aim of the Schneider Electric vulnerability management policy is to address vulnerabilities in cybersecurity affecting Schneider Electric products and systems, in order to protect installed solutions, customers, and the environment.

Schneider Electric works collaboratively with researchers, Cyber Emergency Response Teams (CERTs), and asset owners to ensure that accurate information is provided in a timely fashion to adequately protect their installations.

Schneider Electric's Corporate Product CERT (CPCERT) is responsible for managing and issuing alerts on vulnerabilities and mitigations affecting products and solutions.

The CPCERT coordinates communications between relevant CERTs, independent researchers, product managers, and all affected customers.

Information Available on the Schneider Electric Cybersecurity Support Portal

The support portal provides the following:

- Information about cybersecurity vulnerabilities of products.
- Information about cybersecurity incidents.
- An interface that enables users to declare cybersecurity incidents or vulnerabilities

Glossary

B

Bluetooth Low Energy:

A wireless personal area network technology providing reduced power consumption.

E

EIFE interface:

Embedded Ethernet interface that is an optional module of the MasterPact MTZ drawout circuit breaker. With this module, the circuit breaker is accessible over an Ethernet network. Access to the EIFE interface webpages and EIFE FTP server is authorized depending on the Role-Based Access Control (RBAC) mechanism.

F

FTP - File Transfer Protocol:

A network protocol that provides the ability to transfer files over the Internet from one computer to another.

FTPS - File Transfer Protocol Secure:

A variant of the standard file transfer protocol (FTP) that adds a layer of security on the data in transit through a Secure Socket Layer (SSL) or Transport Layer Security (TLS) protocol connection
.

G

GoDigital:

The Schneider Electric online marketplace for purchasing Digital Modules designed for the MicroLogic X control unit.

H

HMI - Human-machine interface:

Refers to the display screens on the front face of a device that an operator can use to read information or configure the device.

HTTP - Hypertext Transfer Protocol:

A network protocol that handles delivery of files and data on the World Wide Web.

HTTPS - Hypertext Transfer Protocol Secure:

A variant of the standard web transfer protocol (HTTP) that adds a layer of security on the data in transit through a Secure Socket Layer (SSL) or Transport Layer Security (TLS) protocol connection.

I

IEC 61850 Protocol:

A standard for communication networks and systems in substations. Based on Ethernet protocol, it is a standardized method of communication developed to support integrated systems, composed of multi-vendor, self-describing Intelligent Electronic Devices (IEDs). These systems are networked together to perform real-time protection, control, measurement, and monitoring functions.

IFE interface:

IFE Ethernet interface for one circuit breaker that can be connected to the MasterPact MTZ circuit breaker. With this module, the circuit breaker is accessible over an Ethernet network. Access to the IFE interface webpages and IFE FTP server is authorized depending on the Role-Based Access Control (RBAC) mechanism.

IFE server:

IFE Ethernet switchboard server that can be connected to more than one MasterPact MTZ circuit breaker. With this module, the circuit breakers are accessible over an Ethernet network.

IFM interface:

IFM Modbus-SL interface enables an IMU to be connected to a two-wire RS 485 serial line Modbus network. Each IMU has its own IFM interface and a corresponding Modbus address.

IMU - Intelligent modular unit:

The circuit breaker with its internal communicating components (MicroLogic trip unit or control unit) and external ULP modules (IO module), connected to one communication interface is called an intelligent modular unit (IMU).

IP - Internet protocol:

IP addresses are used to identify devices connected to the company intranet or to the Internet.

IT - Information technology:

Refers to the company information systems and information network as opposed to its OT (operational technology) network.

L

LAN - Local area network:

Refers to the company intranet, or IT network.

M

Modbus TCP/IP:

A protocol, which provides client/server communication between devices and TCP/IP that provides communications over an Ethernet connection.

N

NFC - Near field communication:

Refers to a wireless communication protocol.

O

OT - Operational technology:

Refers to the hardware and software systems the company uses to directly monitor and control the production processes and equipment, also called the industrial control (IC) network. OT is often used to refer to the company operational network as opposed to its IT network.

P

Pairing code:

Code consisting of numbers that is used to verify the identity of the individual when establishing a Bluetooth connection.

PKI - Public key infrastructure:

Defines a set of services used to generate and authenticate digital signatures. A public key infrastructure is designed to guarantee confidentiality, integrity, and authenticity of information.

R

RBAC - Role-based access control:

A way to assign different levels of access based on what the user’s defined role has been granted to have access to.

S

SCADA - Supervisory control and data acquisition:

Refers to systems designed to get real-time data on production processes and equipment for monitoring and controlling them remotely.

Security policy:

A system security policy is the security settings that are applied throughout the entire secured system. A security policy generally refers to the use of standards. It is used to define any security-related configuration shared between all devices.

T

TCP/IP - Transmission control protocol/Internet protocol:

Refers to the suite of protocols used for communications over the Internet.

U

ULP connectivity:

ULP is a fast communication link dedicated to circuit breaker monitoring and control. It connects the circuit breaker to an Ethernet interface or to an IO module. ULP operates at a speed of 1 Mb/s and is plug and play.

V

VPN - Virtual private network:

A VPN is used to establish a secured / private "tunnel" between an authenticated external access point and the trusted enterprise network.

Schneider Electric
35 rue Joseph Monier
92500 Rueil Malmaison
France

+ 33 (0) 1 41 29 70 00

www.se.com

As standards, specifications, and design change from time to time, please ask for confirmation of the information given in this publication.

© 2021 – Schneider Electric. All rights reserved.

DOCA0122EN-04