Kraus & Naimer

Sample image

Datasheet

Article number: 70012026
Description: Other Component
Contact development: A220
Face plate engraving: F072
Type of mounting: FS2-V

Type Size: S00
Classification Contact: Rigid contact bridge
Classification Contact Mat: Silver
Classification Terminal: Screw terminal

IEC 60947-3 EN 60947-3, VDE 0660 Teil 107

定格絶縁電圧 Ui

電圧 (V)	AC / DC
440	AC / DC

定格インパルス電圧 Uimp

電圧 (kV)	過電圧カテゴリー	汚染度	電源システム	機能
4	III	3	接地された共通ニュートラル端子のある電線に適用	スイッチ

定格連続通電電流 Iu/Ith

Current (A)	周囲温度 (°C)	ピーク温度 (°C)	追加要求事項
10	55	60	周囲温度 +55°C 、24 時間、ただし 瞬時ピーク温度 +60°C

標準的なエンクロージャー条件での熱電流 Ithe

Current (A)	周囲温度 (°C)	ピーク温度 (°C)	追加要求事項	ステージ数 (~から~まで)	取り付け	取り付け寸法
10	35	40	周囲温度 +35°C 、24 時間、ただし 瞬時ピーク温度 +40°C	--	--	--

定格操作電流 Ie

負荷種別	電圧 (V)	Current (A)
AC-15	110 - 110	2,50
AC-15	220 - 240	2,50
AC-15	380 - 440	1,50
AC-20A	440	10
AC-21A	440	10
AC-22A	220 - 440	10

定格操作電力

負荷種別	電圧 (V)	相数	極数	電力 (kW)
AC-6b	380 - 400	3	3	--
AC-6b	220 - 230	1	2	--
AC-2	220 - 240	3	3	2,50
AC-2	380 - 440	3	3	4,50
AC-3	220 - 240	3	3	1,50
AC-3	380 - 440	3	3	2,20
AC-3	110 - 120	1	2	0,30
AC-3	220 - 240	1	2	0,55
AC-3	380 - 440	1	2	0,75
AC-4	220 - 240	3	3	0,37
AC-4	380 - 440	3	3	0,55
AC-4	110 - 120	1	2	0,15
AC-4	220 - 240	1	2	0,25
AC-4	380 - 440	1	2	0,50
AC-23A	220 - 240	3	3	1,80
AC-23A	380 - 440	3	3	3
AC-23A	110 - 120	1	2	0,37
AC-23A	220 - 240	1	2	0,75
AC-23A	380 - 440	1	2	1,10

最大ヒューズ定格 IEC

ヒューズ特性	ヒューズ数	Current (A)
gG	1	10

Tested AC and DC values

Utilization category / Time constant	No. of contacts in series	Off or change-over switch	電圧 (V)	AC / DC	Current (A)
DC-13	1	ON - OFF	24	DC	0,80
DC-13	1	ON - OFF	48	DC	0,50
DC-13	1	ON - OFF	60	DC	0,20
DC-13	2	ON - OFF	48	DC	0,80
DC-13	2	ON - OFF	96	DC	0,50
DC-13	2	ON - OFF	120	DC	0,20

Kraus & Naimer

Tested AC and DC values					
Utilization category / Time constant	No. of contacts in series	Off or change-over switch	電圧 (V)	AC / DC	Current (A)
DC-13	3	ON - OFF	110	DC	1
DC-21A	1	ON - OFF	24	DC	10
DC-21A	1	ON - OFF	48	DC	6
DC-21A	1	ON - OFF	60	DC	5
DC-21A	1	ON - OFF	110	DC	4
DC-21A	1	ON - OFF	220	DC	0,80
DC-21A	2	ON - OFF	48	DC	10
DC-21A	2	ON - OFF	96	DC	6
DC-21A	2	ON - OFF	120	DC	5
DC-21A	2	ON - OFF	220	DC	4
DC-21A	2	ON - OFF	440	DC	0,80
DC-21A	3	ON - OFF	72	DC	10
DC-21A	3	ON - OFF	144	DC	6
DC-21A	3	ON - OFF	180	DC	5
DC-21A	3	ON - OFF	330	DC	4
DC-21A	3	ON - OFF	660	DC	0,80
DC-21A	4	ON - OFF	96	DC	10
DC-21A	4	ON - OFF	192	DC	6
DC-21A	4	ON - OFF	240	DC	5
DC-21A	4	ON - OFF	440	DC	4
DC-21A	5	ON - OFF	120	DC	10
DC-21A	5	ON - OFF	240	DC	6
DC-21A	5	ON - OFF	300	DC	5
DC-21A	5	ON - OFF	550	DC	4
DC-21A	6	ON - OFF	144	DC	10
DC-21A	6	ON - OFF	288	DC	6
DC-21A	6	ON - OFF	360	DC	5
DC-21A	6	ON - OFF	660	DC	4
DC-21A	8	ON - OFF	192	DC	10
DC-21A	8	ON - OFF	384	DC	6
DC-21A	8	ON - OFF	480	DC	5
DC-22A	1	ON - OFF	24	DC	8
DC-22A	1	ON - OFF	48	DC	5
DC-22A	1	ON - OFF	60	DC	4
DC-22A	1	ON - OFF	110	DC	1,50
DC-22A	1	ON - OFF	220	DC	0,30
DC-22A	2	ON - OFF	48	DC	8
DC-22A	2	ON - OFF	96	DC	5
DC-22A	2	ON - OFF	120	DC	4
DC-22A	2	ON - OFF	220	DC	1,50
DC-22A	2	ON - OFF	440	DC	0,30
DC-22A	3	ON - OFF	72	DC	8
DC-22A	3	ON - OFF	144	DC	5
DC-22A	3	ON - OFF	180	DC	4
DC-22A	3	ON - OFF	330	DC	1,50
DC-22A	3	ON - OFF	660	DC	0,30
DC-22A	4	ON - OFF	96	DC	8
DC-22A	4	ON - OFF	192	DC	5
DC-22A	4	ON - OFF	240	DC	4
DC-22A	4	ON - OFF	440	DC	1,50
DC-22A	5	ON - OFF	120	DC	8
DC-22A	5	ON - OFF	240	DC	5
DC-22A	5	ON - OFF	300	DC	4
DC-22A	5	ON - OFF	550	DC	1,50
DC-22A	6	ON - OFF	144	DC	8
DC-22A	6	ON - OFF	288	DC	5
DC-22A	6	ON - OFF	360	DC	4
DC-22A	6	ON - OFF	660	DC	1,50
DC-22A	8	ON - OFF	192	DC	8
DC-22A	8	ON - OFF	384	DC	5
DC-22A	8	ON - OFF	480	DC	4
DC-23A	1	ON - OFF	24	DC	7
DC-23A	1	ON - OFF	48	DC	4
DC-23A	1	ON - OFF	60	DC	3,50
DC-23A	1	ON - OFF	110	DC	1
DC-23A	1	ON - OFF	220	DC	0,20
DC-23A	2	ON - OFF	48	DC	7
DC-23A	2	ON - OFF	96	DC	4
DC-23A	2	ON - OFF	120	DC	3,50
DC-23A	2	ON - OFF	220	DC	1
DC-23A	2	ON - OFF	440	DC	0,20
DC-23A	3	ON - OFF	72	DC	7
DC-23A	3	ON - OFF	144	DC	4
DC-23A	3	ON - OFF	180	DC	3,50
DC-23A	3	ON - OFF	330	DC	1
DC-23A	3	ON - OFF	660	DC	0,20

Kraus & Naimer

Tested AC and DC values

Utilization category / Time constant	No. of contacts in series	Off or change-over switch	電圧 (V)	AC / DC	Current (A)
DC-23A	4	ON - OFF	96	DC	7
DC-23A	4	ON - OFF	192	DC	4
DC-23A	4	ON - OFF	240	DC	3,50
DC-23A	4	ON - OFF	440	DC	1
DC-23A	5	ON - OFF	120	DC	7
DC-23A	5	ON - OFF	240	DC	4
DC-23A	5	ON - OFF	300	DC	3,50
DC-23A	5	ON - OFF	550	DC	1
DC-23A	6	ON - OFF	144	DC	7
DC-23A	6	ON - OFF	288	DC	4
DC-23A	6	ON - OFF	360	DC	3,50
DC-23A	6	ON - OFF	660	DC	1
DC-23A	8	ON - OFF	192	DC	7
DC-23A	8	ON - OFF	384	DC	4
DC-23A	8	ON - OFF	480	DC	3,50

Rated conditional short-circuit current

Current (kA)	備考	cut-off current Ic (kA)	Durchlassenergie I^2t (kA^2s)
3	--	0,82	0,19

Rated short-circuit making capacity Icm

Current (A)
200

UL60947-4-1 , UL508

Nominal Voltage

電圧 (V)	AC / DC
300	AC

定格絶縁電圧 Ui

電圧 (V)	AC / DC
300	AC

定格熱電流

Current (A)	周囲温度 (°C)	備考
10	0 - 40	--

Horsepower rating

Across-the-Line Motor Starting	電圧 (V)	相数	極数	Power (HP)
DOL	110 - 120	1	2	0,33
DOL	220 - 240	1	2	0,75
DOL	277 - 277	1	2	0,75
DOL	110 - 120	3	3	0,75
DOL	220 - 240	3	3	1

Pilot duty rating code

Duty Code
A300

Temp. rating of wire

Temperature rating (°C)	Current (A)	Text
60 - 75	--	--

General Use

AC / DC	電圧 (V)	Current (A)	相数	極数	No. of contacts in series
AC	120	10	1	1	1
AC	300	10	1	2	1
AC	300	10	3	3	1

CSA

Nominal Voltage

電圧 (V)	AC / DC
300	AC

定格絶縁電圧 Ui

電圧 (V)	AC / DC
300	AC

定格熱電流

Current (A)	周囲温度 (°C)	備考
10	0 - 40	--

Horsepower rating

Across-the-Line Motor Starting	電圧 (V)	相数	極数	Power (HP)
DOL	110 - 120	1	2	0,33
DOL	220 - 240	1	2	0,75
DOL	277 - 277	1	2	0,75
DOL	110 - 120	3	3	0,75
DOL	220 - 240	3	3	1

Pilot duty rating code

Duty Code
A300

Temp. rating of wire

Temperature rating (°C)	Current (A)	Text
75	--	--

General Use

AC / DC	電圧 (V)	Current (A)	相数	極数	No. of contacts in series
AC	120	10	1	1	1

Kraus & Naimer

General Use

AC / DC	電圧 (V)	Current (A)	相数	極数	No. of contacts in series
AC	300	10	1	2	1
AC	300	10	3	3	1

MASTER DATA

Max. number of stages

number of stages	Modul
8	FL

Switch Measures

Picture name	B	F	H	H1	H2	H3
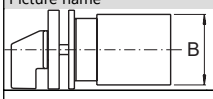	28	--	--	--	--	--

GENERAL TECHNICAL INFORMATION

端子ネジ締付トルク

締付トルク (Nm)	締付トルク (lb-in)
0,40	3,50

Tested AC and DC values

Utilization category / Time constant	No. of contacts in series	Off or change-over switch	電圧 (V)	AC / DC	Current (A)
T≤1ms	1	ON - OFF	24	DC	10
T≤1ms	1	ON - OFF	48	DC	6
T≤1ms	1	ON - OFF	60	DC	2,50
T≤1ms	1	ON - OFF	110	DC	0,70
T≤1ms	1	ON - OFF	220	DC	0,30
T≤1ms	1	ON - OFF	440	DC	0,20
T≤1ms	2	ON - OFF	48	DC	10
T≤1ms	2	ON - OFF	95	DC	6
T≤1ms	2	ON - OFF	120	DC	2,50
T≤1ms	2	ON - OFF	220	DC	0,70
T≤1ms	2	ON - OFF	440	DC	0,30
T≤1ms	2	ON - OFF	660	DC	0,20
T≤1ms	3	ON - OFF	70	DC	10
T≤1ms	3	ON - OFF	140	DC	6
T≤1ms	3	ON - OFF	180	DC	2,50
T≤1ms	3	ON - OFF	330	DC	0,70
T≤1ms	3	ON - OFF	660	DC	0,30
T≤1ms	4	ON - OFF	95	DC	10
T≤1ms	4	ON - OFF	190	DC	6
T≤1ms	4	ON - OFF	240	DC	2,50
T≤1ms	4	ON - OFF	440	DC	0,70
T≤1ms	5	ON - OFF	120	DC	10
T≤1ms	5	ON - OFF	240	DC	6
T≤1ms	5	ON - OFF	300	DC	2,50
T≤1ms	5	ON - OFF	550	DC	0,70
T≤1ms	6	ON - OFF	145	DC	10
T≤1ms	6	ON - OFF	290	DC	6
T≤1ms	6	ON - OFF	360	DC	2,50
T≤1ms	6	ON - OFF	660	DC	0,70
T≤1ms	8	ON - OFF	190	DC	10
T≤1ms	8	ON - OFF	350	DC	6
T≤1ms	8	ON - OFF	450	DC	2,50
T=50ms	1	ON - OFF	24	DC	6
T=50ms	1	ON - OFF	30	DC	3
T=50ms	1	ON - OFF	48	DC	1
T=50ms	1	ON - OFF	60	DC	0,70
T=50ms	1	ON - OFF	110	DC	0,30
T=50ms	2	ON - OFF	48	DC	6
T=50ms	2	ON - OFF	60	DC	3
T=50ms	2	ON - OFF	95	DC	1
T=50ms	2	ON - OFF	120	DC	0,70
T=50ms	2	ON - OFF	220	DC	0,30
T=50ms	3	ON - OFF	70	DC	6
T=50ms	3	ON - OFF	90	DC	3
T=50ms	3	ON - OFF	140	DC	1
T=50ms	3	ON - OFF	180	DC	0,70
T=50ms	3	ON - OFF	330	DC	0,30
T=50ms	4	ON - OFF	95	DC	6
T=50ms	4	ON - OFF	120	DC	3
T=50ms	4	ON - OFF	190	DC	1
T=50ms	4	ON - OFF	240	DC	0,70
T=50ms	4	ON - OFF	440	DC	0,30
T=50ms	5	ON - OFF	120	DC	6
T=50ms	5	ON - OFF	150	DC	3
T=50ms	5	ON - OFF	240	DC	1
T=50ms	5	ON - OFF	300	DC	0,70
T=50ms	5	ON - OFF	550	DC	0,30
T=50ms	6	ON - OFF	145	DC	6

Kraus & Naimer

Tested AC and DC values

Utilization category / Time constant	No. of contacts in series	Off or change-over switch	電圧 (V)	AC / DC	Current (A)
T=50ms	6	ON - OFF	180	DC	3
T=50ms	6	ON - OFF	290	DC	1
T=50ms	6	ON - OFF	360	DC	0,70
T=50ms	6	ON - OFF	660	DC	0,30
T=50ms	8	ON - OFF	190	DC	6
T=50ms	8	ON - OFF	240	DC	3
T=50ms	8	ON - OFF	350	DC	1
T=50ms	8	ON - OFF	450	DC	0,70

Stripping length

Length (mm)	
6	STRIPPINGLENGTH

Minimal ratings (voltage/current)

電圧 (V)	Current (mA)	Environment conditions	Environment conditions 2	Environment conditions 3
20	5	Ambient air must be free of particular contamination with sulfur and/or sulfurous components such as H2S etc.	In case extraordinary contamination with dust is expected an adequate dust protection is required.	--

定格短時間耐電流 Icw

時間 (s)	Current (A)
1	90

電線サイズ

電線種別	最小値 / 最大値	1端子当たりの配線数	断面積 (mm²) or (AWG/kcmil)	電線材料
単線	最小	1	0.5mm²	銅
単線	最小	2	0.5mm²	銅
細撚線	最小	1	0.75mm²	銅
細撚線	最小	2	0.75mm²	銅
細撚線	最大	2	AWG 16	銅
細撚線	最大	2	1.5mm²	銅
単線または荒撚線	最大	2	AWG 14	銅
単線または荒撚線	最大	2	1.5mm²	銅
DIN46228規格フェルール適用の細撚線	最大	2	1mm²	銅
DIN46228規格フェルール適用の細撚線	最小	1	0.5mm²	銅
DIN46228規格フェルール適用の細撚線	最小	2	0.5mm²	銅

認証

仕様	マーキング
EAC	EAC
CEマーキング	CE
UK Directives	UK CA
IEC 60947-3; EN 60947-3; VDE 0660 Teil107	IEC 60947-3 EN 60947-3
UL 60947-4-1; CSA C22.2 No. 60947-4-1	c UL us LISTED 77B7
CSA C.22.2 No.14	SP
GB/T14048.3	CCC GB/T14048.3

1接点当たりの電力

電力 (W)
0,40

Mechanical life

No. of operations	周囲温度 (°C)	Number of stages	Limitations
1000000	-5 - 55	--	Valid for manual operation. Valid for switches without optional extras. The value refers to the mechanics of the device, for lifetime of the electrical contacts please refer to "electrical life values".
150000	-25 - 55	8	Valid for manual operation. Valid for switches without optional extras. The value refers to the mechanics of the device, for lifetime of the electrical contacts please refer to "electrical life values".

Electrical life (B10-Value)

負荷種別	cos(φ)	Time constant (ms)	電圧 (V)	Current (A)	No. of operations	number of series contacts	AC/DC	相数	極数
--	0,59	--	122	10	50000	1	AC	1	1
--	0,59	--	220	5	150000	1	AC	1	1
--	0,59	--	220	10	25000	1	AC	1	1
--	0,95	--	220	10	25000	1	AC	1	1
--	0,65	--	380	5	100000	1	AC	1	1
AC-3	--	--	440	7	150000	1	AC	3	3
AC-23	--	--	440	10	25000	1	AC	3	3

Kraus & Naimer

Electrical life (B10-Value)

負荷種別	cos(φ)	Time constant (ms)	電圧 (V)	Current (A)	No. of operations	number of series contacts	AC/DC	相数	極数
--	--	1	24	10	140000	1	DC	1	1
--	--	1	48	6	50000	1	DC	1	1
--	--	1	60	2,50	200000	1	DC	1	1
--	--	1	110	0,70	100000	1	DC	1	1
--	--	1	220	0,30	200000	1	DC	1	1
--	--	48	24	0,25	400000	1	DC	1	1
--	--	50	24	0,50	100000	1	DC	1	1
--	--	50	24	1	50000	1	DC	1	1
--	--	50	24	6	10000	1	DC	1	1
--	--	50	30	3	20000	1	DC	1	1
--	--	50	48	1	50000	1	DC	1	1
--	--	50	110	0,30	75000	1	DC	1	1
--	--	50	110	0,50	50000	1	DC	1	1
--	--	53	110	0,10	200000	1	DC	1	1
--	--	55	110	1	25000	1	DC	1	1

Recommended screw driver

Type of screw driver	Value
Cross Screwdriver	PH1
Flat blade	0,6x3,5

Degree of protection

IP - Code switch terminal
IP20

輸送・保管中の状態

最小温度 (°C)	最大温度 (°C)	追加要求事項
-40	85	-5°C以下の場合、衝撃を与えないでください。

衝撃 / 振動

発振の種類	仕様値
衝撃耐性	最小 5g, 30ms

注意事項

備考

- 接点に潤滑剤を塗布したり、表面処理をしたりしないでください。
- スイッチの取り付け、接続、操作の設定は、技術的に認められた規則に従って、有資格者のみが行うことができます。
- 銅線のみを使用してください。電線を半田付けしないでください。
- ジャンパー線(コモン線)に接続された端子ネジは工場出荷時には仮締め状態となっています。ジャンパー線(コモン線)に接続された端子ネジの締め付けを含む全ての端子ネジが、必ず適切なトルクで締められていることをご確認の上、ご使用ください。
- スイッチの設置後、端子間の間隔は、適用される規格の要件を満たすのに十分なものでなければならない。

Creepage distance

Distance (mm)
6,35

Clearance

Distance (mm)
6,35

Distance of stages

Distance (mm)
12

操作温度

最小温度 [°C]	最大温度 [°C]
-25	60

Waste Electrical & Electronic Equipment (WEEE)

Picture name	Description
	Do not throw in the trash as care must be taken to ensure environmentally sound disposal and recycling. Please either use an environmentally friendly waste disposal company; return to the supplier for disposal; or return direct to the manufacturer, Kraus & Naimer. You can find local Kraus & Naimer offices at www.krausnaimer.com

Proposition 65

Picture name	Description
	WARNING: This product can expose you to chemicals including nickel and lead, which is known to the State of California to cause cancer. For more information go to www.P65Warnings.ca.gov.

Mounting-FS2-V

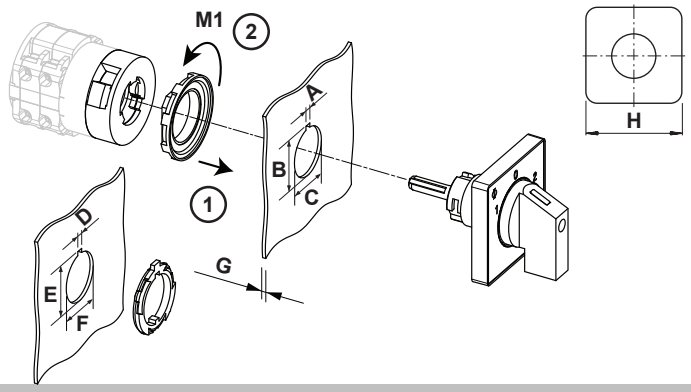

IP - Code front side		IP66, IP67, IP69k
Stages		1,00 - 8,00
A	H	1,70 mm
A+_tol.	H	0,20 mm
A-_tol.	H	0,00 mm
B	H	17,90 mm
B+_tol.	H	0,20 mm
B-_tol.	H	0,00 mm
C	Ø	16,20 mm
C+_tol.	Ø	0,20 mm
C-_tol.	Ø	0,00 mm
D	H	3,20 mm
D+_tol.	H	0,20 mm
D-_tol.	H	0,00 mm
E	H	24,10 mm
E+_tol.	H	0,40 mm
E-_tol.	H	0,00 mm
F	Ø	22,30 mm
F+_tol.	Ø	0,40 mm
F-_tol.	Ø	0,00 mm
G	H	<= 5,00 mm
H	H	30,00 mm
M1	M	0,70 Nm

Kraus & Naimer

Wiring diagram

CG4.A220.FS2-V

Kraus & Naimer

CG4 | **A220** | **Page 1 of 1**

Face Plate

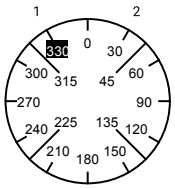

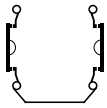

Switching Angle 60

Total switching Angle 60

		1	3	5	7	9	11	13	15	17	19	21	23
		2	4	6	8	10	12	14	16	18	20	22	24
1	330	■											
	345												
	0												
	15												
2	30		■										
	45												
	60												
	75												
	90												
	105												
	120												
	135												
	150												
	165												
	180												
	195												
	210												
	225												
	240												
	255												
	270												
	285												
	300												
	315												

Version: 106

Kraus & Naimer

Face plate

S00.F072/A10.E1

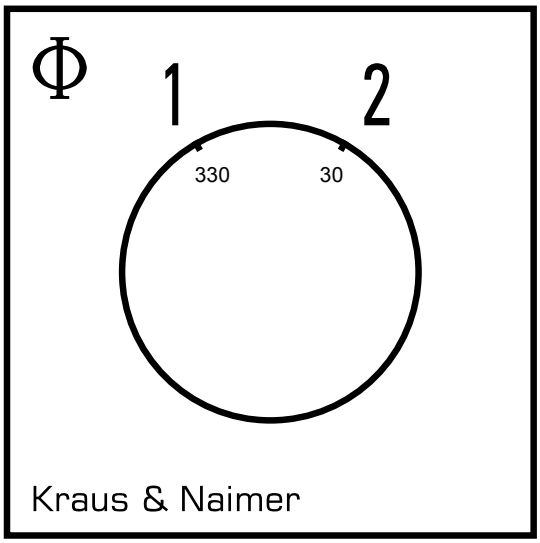

Kraus & Naimer

HANDLES

Designation: S00.G251
Handle colour: "1" black

A	16,50 mm	B	14,80 mm	C	16,00 mm