Kraus & Naimer

Sample image

Datasheet

Article number: 70010447
Designation: CA11.A293*NLB402.PF1
Description: Schalter
Contact development: A293
Face plate engraving: F456
Type of mounting: PF1

Type Size: S0
Classification Contact: Rigid contact bridge
Classification Contact Mat: Silver
Classification Terminal: Screw terminal

IEC 60947-3 EN 60947-3, VDE 0660 Teil 107

Rated insulation voltage Ui

Voltage (V)	*AC / DC*
690	AC / DC

Rated impulse withstand voltage Uimp

Voltage (kV)	*Overvoltage category*	*Pollution degree*	*Supply system*	*Function*
6	III	3	Valid for lines with grounded common neutral termination	switch

Rated uninterrupted current Iu/Ith

Current (A)	*Ambient temperature (°C)*	*Peak temperature (°C)*	*additional requirements*
20	55	60	Ambient temperature +55°C during 24 hours with peaks up to +60°C

Conventional enclosed thermal current Ithe

Current (A)	*Ambient temperature (°C)*	*Peak temperature (°C)*	*Additional requirements*	*No. of stages (from - to)*	*Mounting*	*Mounting size*
20	35	40	Ambient temperature +35°C during 24 hours with peaks up to +40°C	--	--	--

Rated operational current Ie

Utilization category	*Voltage (V)*	*Current (A)*
AC-15	220 - 240	6
AC-15	380 - 440	4
AC-20A	690	20
AC-21A	20 - 690	20
AC-22A	220 - 500	20
AC-22A	660 - 690	20

Rated operational power

Utilization category	*Voltage (V)*	*No. of phases*	*No. of poles*	*Power (kW)*
AC-2	220 - 240	3	3	4
AC-2	380 - 440	3	3	7,50
AC-2	500 - 500	3	3	10
AC-2	660 - 690	3	3	10
AC-3	220 - 240	3	3	3
AC-3	380 - 440	3	3	5,50
AC-3	500 - 500	3	3	5,50
AC-3	660 - 690	3	3	5,50
AC-3	110 - 120	1	2	0,60
AC-3	220 - 240	1	2	2,20
AC-3	380 - 440	1	2	3
AC-4	220 - 240	3	3	0,55
AC-4	380 - 440	3	3	1,50
AC-4	500 - 500	3	3	1,50
AC-4	660 - 690	3	3	1,50
AC-4	110 - 120	1	2	0,30
AC-4	220 - 240	1	2	0,75
AC-4	380 - 440	1	2	1,50
AC-23A	220 - 240	3	3	3,70
AC-23A	380 - 440	3	3	7,50
AC-23A	500 - 500	3	3	7,50
AC-23A	660 - 690	3	3	7,50
AC-23A	110 - 120	1	2	0,75
AC-23A	220 - 240	1	2	2,50
AC-23A	380 - 440	1	2	3,70

Max Fuse Rating IEC

Fuse characteristic	*No. of Fuses*	*Current (A)*
gG	1	25

Kraus & Naimer

Tested AC and DC values					
Utilization category / Time constant	*No. of contacts in series*	*Off or change-over switch*	*Voltage (V)*	*AC / DC*	*Current (A)*
DC-13	1	ON - OFF	24	DC	3
DC-13	1	ON - OFF	48	DC	1,70
DC-13	1	ON - OFF	60	DC	1,40
DC-13	1	ON - OFF	110	DC	0,70
DC-13	1	ON - OFF	220	DC	0,15
DC-13	2	ON - OFF	24	DC	6
DC-13	2	ON - OFF	48	DC	3
DC-13	2	ON - OFF	96	DC	1,70
DC-13	2	ON - OFF	120	DC	1,40
DC-13	2	ON - OFF	220	DC	0,70
DC-13	2	ON - OFF	440	DC	0,15
DC-21A	1	ON - OFF	24	DC	20
DC-21A	1	ON - OFF	48	DC	20
DC-21A	1	ON - OFF	60	DC	20
DC-21A	1	ON - OFF	110	DC	6
DC-21A	1	ON - OFF	220	DC	0,90
DC-21A	2	ON - OFF	48	DC	16
DC-21A	2	ON - OFF	96	DC	14
DC-21A	2	ON - OFF	120	DC	13
DC-21A	2	ON - OFF	220	DC	6
DC-21A	2	ON - OFF	440	DC	0,90
DC-21A	3	ON - OFF	72	DC	16
DC-21A	3	ON - OFF	144	DC	14
DC-21A	3	ON - OFF	180	DC	13
DC-21A	3	ON - OFF	330	DC	6
DC-21A	3	ON - OFF	660	DC	0,90
DC-21A	4	ON - OFF	96	DC	16
DC-21A	4	ON - OFF	192	DC	14
DC-21A	4	ON - OFF	240	DC	13
DC-21A	4	ON - OFF	440	DC	6
DC-21A	5	ON - OFF	120	DC	16
DC-21A	5	ON - OFF	240	DC	14
DC-21A	5	ON - OFF	300	DC	13
DC-21A	5	ON - OFF	550	DC	6
DC-21A	6	ON - OFF	144	DC	16
DC-21A	6	ON - OFF	288	DC	14
DC-21A	6	ON - OFF	360	DC	13
DC-21A	6	ON - OFF	660	DC	6
DC-21A	8	ON - OFF	192	DC	16
DC-21A	8	ON - OFF	384	DC	14
DC-21A	8	ON - OFF	480	DC	13
DC-22A	1	ON - OFF	24	DC	20
DC-22A	1	ON - OFF	48	DC	20
DC-22A	1	ON - OFF	60	DC	12
DC-22A	1	ON - OFF	110	DC	1,90
DC-22A	1	ON - OFF	220	DC	0,30
DC-22A	2	ON - OFF	48	DC	14
DC-22A	2	ON - OFF	96	DC	13
DC-22A	2	ON - OFF	120	DC	12
DC-22A	2	ON - OFF	220	DC	1,90
DC-22A	2	ON - OFF	440	DC	0,30
DC-22A	3	ON - OFF	72	DC	14
DC-22A	3	ON - OFF	144	DC	13
DC-22A	3	ON - OFF	180	DC	12
DC-22A	3	ON - OFF	330	DC	1,90
DC-22A	3	ON - OFF	660	DC	0,30
DC-22A	4	ON - OFF	96	DC	14
DC-22A	4	ON - OFF	192	DC	13
DC-22A	4	ON - OFF	240	DC	12
DC-22A	4	ON - OFF	440	DC	1,90
DC-22A	5	ON - OFF	120	DC	14
DC-22A	5	ON - OFF	240	DC	13
DC-22A	5	ON - OFF	300	DC	12
DC-22A	5	ON - OFF	550	DC	1,90
DC-22A	6	ON - OFF	144	DC	14
DC-22A	6	ON - OFF	288	DC	13
DC-22A	6	ON - OFF	360	DC	12
DC-22A	6	ON - OFF	660	DC	1,90
DC-22A	8	ON - OFF	192	DC	14
DC-22A	8	ON - OFF	384	DC	13
DC-22A	8	ON - OFF	480	DC	12
DC-23A	1	ON - OFF	24	DC	20
DC-23A	1	ON - OFF	48	DC	20
DC-23A	1	ON - OFF	60	DC	10
DC-23A	1	ON - OFF	110	DC	1,50
DC-23A	1	ON - OFF	220	DC	0,20

Kraus & Naimer

Tested AC and DC values

Utilization category / Time constant	No. of contacts in series	Off or change-over switch	Voltage (V)	AC / DC	Current (A)
DC-23A	2	ON - OFF	48	DC	13
DC-23A	2	ON - OFF	96	DC	12
DC-23A	2	ON - OFF	120	DC	10
DC-23A	2	ON - OFF	220	DC	1,50
DC-23A	2	ON - OFF	440	DC	0,20
DC-23A	3	ON - OFF	72	DC	13
DC-23A	3	ON - OFF	144	DC	12
DC-23A	3	ON - OFF	180	DC	10
DC-23A	3	ON - OFF	330	DC	1,50
DC-23A	3	ON - OFF	660	DC	0,20
DC-23A	4	ON - OFF	96	DC	13
DC-23A	4	ON - OFF	192	DC	12
DC-23A	4	ON - OFF	240	DC	10
DC-23A	4	ON - OFF	440	DC	1,50
DC-23A	5	ON - OFF	120	DC	13
DC-23A	5	ON - OFF	240	DC	12
DC-23A	5	ON - OFF	300	DC	10
DC-23A	5	ON - OFF	550	DC	1,50
DC-23A	6	ON - OFF	144	DC	13
DC-23A	6	ON - OFF	288	DC	12
DC-23A	6	ON - OFF	360	DC	10
DC-23A	6	ON - OFF	660	DC	1,50
DC-23A	8	ON - OFF	192	DC	13
DC-23A	8	ON - OFF	384	DC	12
DC-23A	8	ON - OFF	480	DC	10

Rated conditional short-circuit current

Current (kA)	Text	cut-off current Ic (kA)	Durchlassenergie I²t (kA²s)
2	--	1,51	1,67

Rated breaking capacity

Voltage (V)	Current (A)	Utilization category / UL (DOL)
220 - 240	150	--
380 - 440	150	--
660 - 690	80	--

UL60947-4-1 , UL508

Nominal Voltage

Voltage (V)	AC / DC
600	AC

Rated insulation voltage Ui

Voltage (V)	AC / DC
600	AC

Rated thermal current

Current (A)	Ambient temperature (°C)	Additional Text
20	0 - 40	--

Horsepower rating

Across-the-Line Motor Starting	Voltage (V)	No. of phases	No. of poles	Power (HP)
Reversing	110 - 120	1	2	0,17
Reversing	220 - 240	1	2	0,50
Reversing	277 - 277	1	2	0,60
Reversing	415 - 415	1	2	1
Reversing	440 - 480	1	2	1,50
Reversing	550 - 600	1	2	1,50
Reversing	110 - 120	3	3	0,50
Reversing	220 - 240	3	3	1
Reversing	415 - 415	3	3	2
Reversing	440 - 480	3	3	3
Reversing	550 - 600	3	3	3
DOL	110 - 120	1	2	0,50
DOL	220 - 240	1	2	1
DOL	277 - 277	1	2	2
DOL	440 - 480	1	2	2
DOL	550 - 600	1	2	2
DOL	110 - 120	3	3	1,50
DOL	220 - 240	3	3	3
DOL	415 - 415	3	3	5
DOL	440 - 480	3	3	5
DOL	550 - 600	3	3	5

Pilot duty rating code

Duty Code
A600

SCCR / Max. fuse rating

Conditions of acceptability

These devices are suitable for use on circuits capable of delivering not more than 5000 rms symmetrical amperes, 600V ac max. when protected by Class RK1 fuses. Manual Motor Controllers when intended for use as a motor disconnector are suitable for use on a circuit capable of delivering not more than 5000 rms symmetrical amperes, 600V ac max. when protected by 30A Class J time delay fuses.

Temp. rating of wire

Temperature rating (°C)	Current (A)	Text
60 - 75	--	--

Kraus & Naimer

Connecting instructions

Markings

When intended for use as a motor disconnector the device shall be provided with a method of being locked in the OFF-position.

General Use

AC / DC	*Voltage (V)*	*Current (A)*	*No. of phases*	*No. of poles*	*No. of contacts in series*
AC	600	20	1	2	1
AC	600	20	3	3	1

Suitable as Motor disconnect

Yes/No

Y

CSA

Nominal Voltage

Voltage (V)	*AC / DC*
600	AC

Rated insulation voltage Ui

Voltage (V)	*AC / DC*
600	AC

Rated thermal current

Current (A)	*Ambient temperature (°C)*	*Additional Text*
20	0 - 40	--

Horsepower rating

Across-the-Line Motor Starting	*Voltage (V)*	*No. of phases*	*No. of poles*	*Power (HP)*
DOL	110 - 120	1	2	0,50
DOL	220 - 240	1	2	1
DOL	277 - 277	1	2	2
DOL	415 - 415	1	2	2
DOL	440 - 480	1	2	2
DOL	550 - 600	1	2	2
DOL	110 - 120	3	3	1,50
DOL	220 - 240	3	3	3
DOL	415 - 415	3	3	5
DOL	440 - 480	3	3	5
DOL	550 - 600	3	3	5

Pilot duty rating code

Duty Code

A600

Temp. rating of wire

Temperature rating (°C)	*Current (A)*	*Text*
75	--	only

General Use

AC / DC	*Voltage (V)*	*Current (A)*	*No. of phases*	*No. of poles*	*No. of contacts in series*
AC	600	20	1	1	1

MASTER DATA

Max. number of stages

number of stages	*Modul*
12	FL

Switch Measures

Picture name	*B*	*F*	*H*	*H1*	*H2*	*H3*
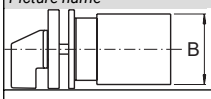	43	--	--	--	--	--

GENERAL TECHNICAL INFORMATION

Tightening torque of screws

tightening torque (Nm)	*tightening torque (lb-in)*
0,60	5

Tested AC and DC values

Utilization category / Time constant	*No. of contacts in series*	*Off or change-over switch*	*Voltage (V)*	*AC / DC*	*Current (A)*
T≤1ms	1	ON - OFF	24	DC	20
T≤1ms	1	ON - OFF	48	DC	12
T≤1ms	1	ON - OFF	60	DC	4,50
T≤1ms	1	ON - OFF	110	DC	1
T≤1ms	1	ON - OFF	220	DC	0,40
T≤1ms	1	ON - OFF	440	DC	0,27
T≤1ms	2	ON - OFF	48	DC	20
T≤1ms	2	ON - OFF	95	DC	12
T≤1ms	2	ON - OFF	120	DC	4,50
T≤1ms	2	ON - OFF	220	DC	1
T≤1ms	2	ON - OFF	440	DC	0,40
T≤1ms	2	ON - OFF	660	DC	0,27
T≤1ms	3	ON - OFF	70	DC	20
T≤1ms	3	ON - OFF	140	DC	12
T≤1ms	3	ON - OFF	180	DC	4,50
T≤1ms	3	ON - OFF	330	DC	1
T≤1ms	3	ON - OFF	660	DC	0,40
T≤1ms	4	ON - OFF	95	DC	20
T≤1ms	4	ON - OFF	190	DC	12

Kraus & Naimer

Tested AC and DC values

Utilization category / Time constant	No. of contacts in series	Off or change-over switch	Voltage (V)	AC / DC	Current (A)
T≤1ms	4	ON - OFF	240	DC	4,50
T≤1ms	4	ON - OFF	440	DC	1
T≤1ms	5	ON - OFF	120	DC	20
T≤1ms	5	ON - OFF	240	DC	12
T≤1ms	5	ON - OFF	300	DC	4,50
T≤1ms	5	ON - OFF	550	DC	1
T≤1ms	6	ON - OFF	145	DC	20
T≤1ms	6	ON - OFF	290	DC	12
T≤1ms	6	ON - OFF	360	DC	4,50
T≤1ms	6	ON - OFF	660	DC	1
T≤1ms	8	ON - OFF	190	DC	20
T≤1ms	8	ON - OFF	350	DC	12
T≤1ms	8	ON - OFF	450	DC	4,50
T=50ms	1	ON - OFF	24	DC	12
T=50ms	1	ON - OFF	30	DC	5
T=50ms	1	ON - OFF	48	DC	2
T=50ms	1	ON - OFF	60	DC	1
T=50ms	1	ON - OFF	110	DC	0,40
T=50ms	2	ON - OFF	48	DC	12
T=50ms	2	ON - OFF	60	DC	5
T=50ms	2	ON - OFF	95	DC	2
T=50ms	2	ON - OFF	120	DC	1
T=50ms	2	ON - OFF	220	DC	0,40
T=50ms	3	ON - OFF	70	DC	12
T=50ms	3	ON - OFF	90	DC	5
T=50ms	3	ON - OFF	140	DC	2
T=50ms	3	ON - OFF	180	DC	1
T=50ms	3	ON - OFF	330	DC	0,40
T=50ms	4	ON - OFF	95	DC	12
T=50ms	4	ON - OFF	120	DC	5
T=50ms	4	ON - OFF	190	DC	2
T=50ms	4	ON - OFF	240	DC	1
T=50ms	4	ON - OFF	440	DC	0,40
T=50ms	5	ON - OFF	120	DC	12
T=50ms	5	ON - OFF	150	DC	5
T=50ms	5	ON - OFF	240	DC	2
T=50ms	5	ON - OFF	300	DC	1
T=50ms	5	ON - OFF	550	DC	0,40
T=50ms	6	ON - OFF	145	DC	12
T=50ms	6	ON - OFF	180	DC	5
T=50ms	6	ON - OFF	290	DC	2
T=50ms	6	ON - OFF	360	DC	1
T=50ms	6	ON - OFF	660	DC	0,40
T=50ms	8	ON - OFF	190	DC	12
T=50ms	8	ON - OFF	240	DC	5
T=50ms	8	ON - OFF	350	DC	2
T=50ms	8	ON - OFF	450	DC	1

Stripping length

Length (mm)	--
8	STRIPPINGLENGTH

Minimal ratings (voltage/current)

Voltage (V)	Current (mA)	Environment conditions	Environment conditions 2	Environment conditions 3
20	5	Ambient air must be free of particular contamination with sulfur and/or sulfurous components such as H2S etc.	In case extraordinary contamination with dust is expected an adequate dust protection is required.	--

Rated short-time withstand current Icw

Time (s)	Current (A)
1	140

Size of conductor

composition of conductor	Min. / Max. value	No. of conductor per terminal	Cross section (mm²) or (AWG/kcmil)	Material of the wire
solid wire	Min.	1	0.5mm²	Copper
solid wire	Min.	2	0.5mm²	Copper
flexible wire	Min.	1	0.75mm²	Copper
flexible wire	Min.	2	0.75mm²	Copper
flexible wire	Max.	2	2.5mm²	Copper
flexible wire	Max.	2	AWG 14	Copper
Single-core or stranded wire	Max.	2	AWG 12	Copper
Single-core or stranded wire	Max.	2	2.5mm²	Copper
flexible wire with ferrule according to DIN 46228	Max.	2	2.5mm²	Copper
flexible wire with ferrule according to DIN 46228	Min.	1	0.5mm²	Copper
flexible wire with ferrule according to DIN 46228	Min.	2	0.5mm²	Copper

Approbations

Specification	Marking
EAC	EAC

Kraus & Naimer

Approbations

Specification	*Marking*
CE marking	CE
UK Directives	UK CA
IEC 60947-3; EN 60947-3; VDE 0660 Teil107	IEC 60947-3 EN 60947-3
UL 60947-4-1; CSA C22.2 No. 60947-4-1	c UL us LISTED 77B7
CSA C.22.2 No.14	
Russian Maritme Register of Shipping	

Power loss per pole

Power (W)
0,90

Mechanical life

No. of operations	*Ambient temperature (°C)*	*Number of stages*	*Limitations*
1000000	-5 - 55	--	Valid for manual operation. Valid for switches without optional extras. The value refers to the mechanics of the device, for lifetime of the electrical contacts please refer to "electrical life values".

Electrical life (B10-Value)

Utilization category	*cos(φ)*	*Time constant (ms)*	*Voltage (V)*	*Current (A)*	*No. of operations*	*number of series contacts*	*AC/DC*	*No. of phases*	*No. of poles*
--	0,56	--	119	15	100000	1	AC	1	1
--	0,59	--	122	10	150000	1	AC	1	1
--	0,59	--	220	5	900000	1	AC	1	1
--	0,59	--	220	10	100000	1	AC	1	1
--	0,95	--	220	10	125000	1	AC	1	1
--	0,59	--	220	15	35000	1	AC	1	1
--	0,64	--	220	20	25000	1	AC	1	1
--	0,65	--	380	5	300000	1	AC	1	1
--	0,64	--	380	10	90000	1	AC	1	1
--	0,64	--	380	15	40000	1	AC	1	1
AC-3	--	--	440	11,50	100000	1	AC	3	3
AC-23	--	--	440	15,50	30000	1	AC	3	3
AC-3	--	--	690	6,80	100000	1	AC	3	3
AC-23	--	--	690	9	80000	1	AC	3	3
AC-22	--	--	690	20	40000	1	AC	3	3
--	--	1	24	20	80000	1	DC	1	1
--	--	1	48	12	75000	1	DC	1	1
--	--	1	60	4,50	200000	1	DC	1	1
--	--	1	110	1	100000	1	DC	1	1
--	--	1	220	0,40	100000	1	DC	1	1
--	--	50	24	0,50	200000	1	DC	1	1
--	--	50	24	1	100000	1	DC	1	1
--	--	50	24	12	8000	1	DC	1	1
--	--	50	48	1	75000	1	DC	1	1
--	--	50	60	2	30000	1	DC	1	1
--	--	50	110	0,40	80000	1	DC	1	1
--	--	50	110	0,50	80000	1	DC	1	1
--	--	52	110	0,10	200000	1	DC	1	1
--	--	55	110	1	50000	1	DC	1	1
--	--	55	110	1,50	25000	1	DC	1	1
--	--	55	220	0,50	40000	1	DC	1	1

Recommended screw driver

Type of screw driver	*Value*
Cross Screwdriver	PH1
Flat blade	0,8x4

Degree of protection

IP - Code switch terminal
IP20

Conditions during transport and storing

Minimum temperature (°C)	*Maximum temperature (°C)*	*additional requirements*
-40	85	In case of temperatures below -5°C no shock load permissible

Shock / Vibration

Type of oscillation	*Values*
Resistance to vibration	Min. 4g, 2-100Hz, 1,6mm
Resistance to shock	Min. 5g, 6ms
Resistance to shock	min. 5g, 30ms
Resistance to vibration	IEC 61373 (1999) Category 1, Class B

General Information

Text

- DC switching capacity applies to ON/OFF switches.

Kraus & Naimer

General Information

Text

- Do not lubricate or treat contacts.
- Switches may only be mounted, connected and set into operation by qualified persons according to the accepted rules of technology.
- Use copper wire only. Do not coat the wire end with tin.
- Terminals with factory fitted jumper links are tightened during production. Take care during installation to ensure factory fitted links are not lost by undoing both sides of linked terminals. After wiring, all terminal screws must be tightened to recommended torque specifications.
- After installation of the switches the spacings between the terminals must be sufficient to fulfill the requirement of the applicable standards.

Creepage distance

Distance (mm)
12,70

Clearance

Distance (mm)
9,50

Distance of stages

Distance (mm)
12,70

Operating temperature

Min. Temperature [°C]	*Max. Temperature [°C]*
-25	60

Waste Electrical & Electronic Equipment (WEEE)

Picture name	*Description*
	Do not throw in the trash as care must be taken to ensure environmentally sound disposal and recycling. Please either use an environmentally friendly waste disposal company; return to the supplier for disposal; or return direct to the manufacturer, Kraus & Naimer. You can find local Kraus & Naimer offices at www.krausnaimer.com

Proposition 65

Picture name	*Description*
	WARNING: This product can expose you to chemicals including nickel and lead, which is known to the State of California to cause cancer. For more information go to www.P65Warnings.ca.gov.

Mounting-PF1

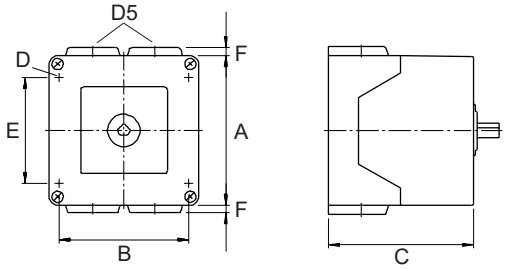

IP - Code front side		IP65
Stages		1,00 - 2,00
A	□	82,00 mm
B	↔	68,00 mm
C	↔	64,70 mm
D	⌀	4,40 mm
D5		4,00 x M20
E	↔	52,00 mm
F	↔	5,00 mm

Kraus & Naimer

Wiring diagram

CA11.A293.PF1

Kraus & Naimer

CA11 **A293** **Page 1 of 1**

Face Plate

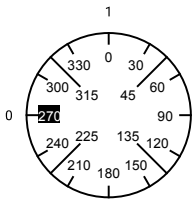

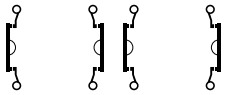

Switching Angle 90

Total switching Angle 90

		1	3	5	7	9	11	13	15	17	19	21	23
		2	4	6	8	10	12	14	16	18	20	22	24
0	270												
	285												
	300				■								
	315				■								
	330	■	■	■	■								
	345	■	■	■	■								
1	0												
	15												
	30												
	45												
	60												
	75												
	90												
	105												
	120												
	135												
	150												
	165												
	180												
	195												
	210												
	225												
	240												
	255												

Version: 80

Kraus & Naimer

Face plate

S1.F456/C10.V11H

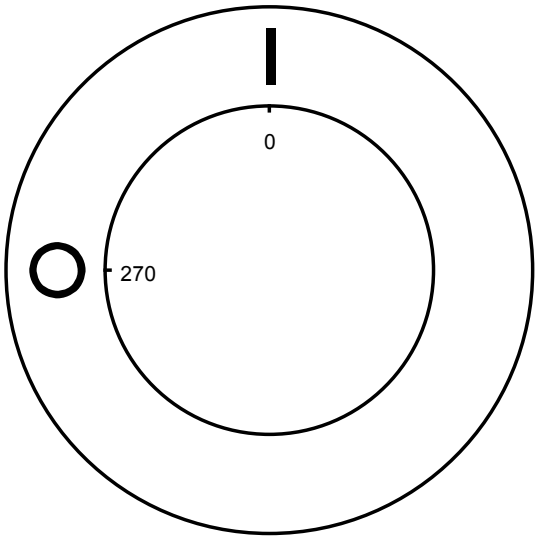

Kraus & Naimer

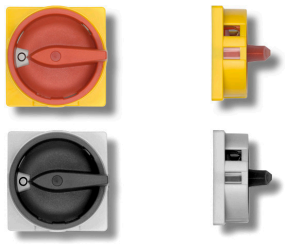

Sample image

PADLOCK DEVICE with F-handle ring

Designation: S1.V840G/D61/C1
Colour of F-handle ring: "D" red
Colour of face ring: "6" yellow
Locking position: "1" at 09:00 (1x90°)
Type of mounting: "C" for type of mounting PN, PF, PFA-PFF
Switch type: "1" for C-switches and for KG10.

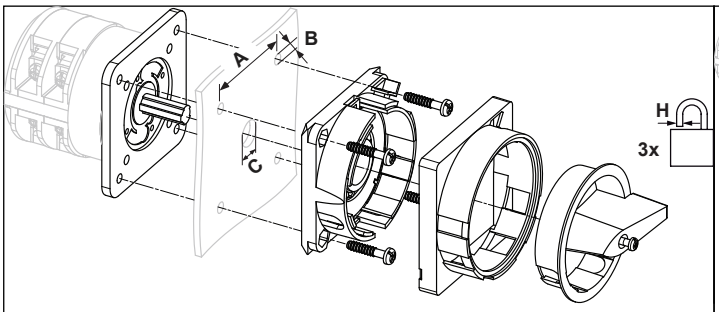

A	□	48,00 mm	B	⌀	5,00 mm	C	⌀ 15,00 mm
H	⌀	7,00 - 8,50 mm					

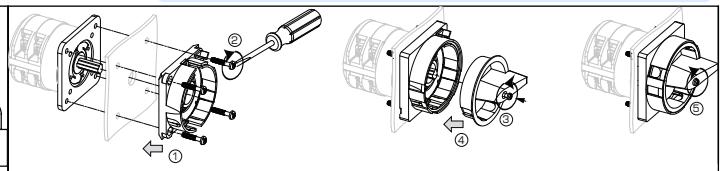

MOUNTING

1 + 2 The padlock device has to be mounted by four cylinder head screws from the front.

3 Loosen the screw and

4 Push it into the handle onto the shaft

5 Fasten the screw.

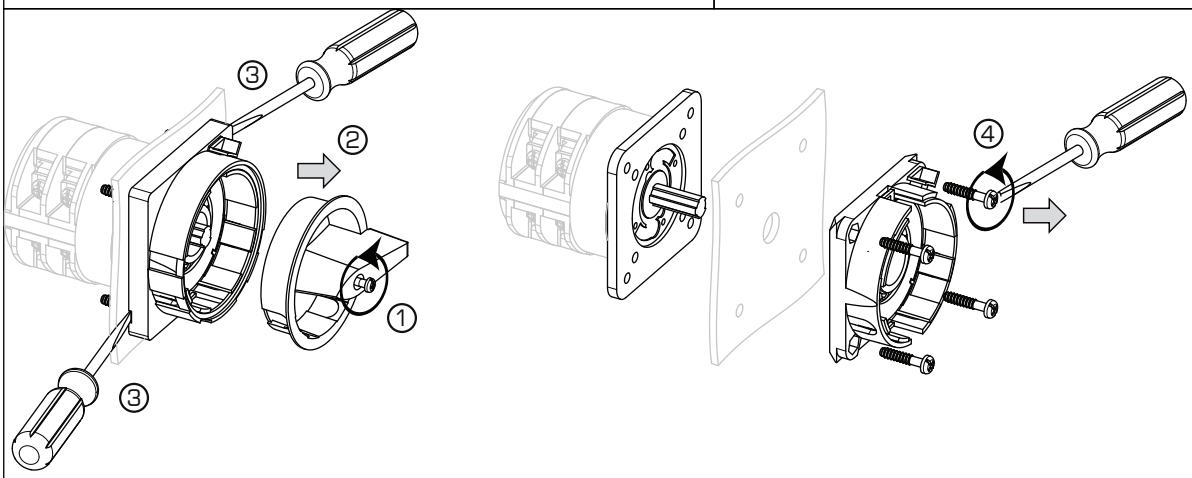

1 Loose handle screw

2 remove handle.

3 Insert a proper auxiliary tool at those points of the frame of the device which are marked by a srew driver on the drawing and remove the frame.

4 Fixing screws can be loosen now.