Read these instructions & save for future use

Ground spot | 24V | 55mm | 40° | bronze ring | 2W | 3000K

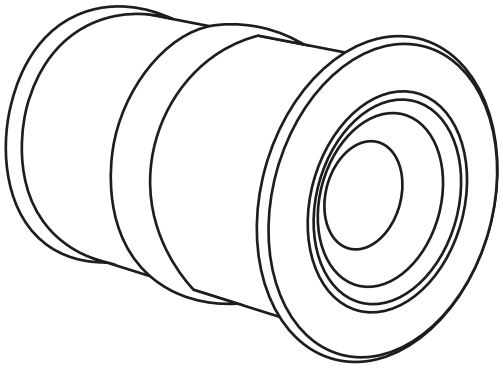

Article number	**140-012**
Brand	**Tronix Lighting**
Type	**Ground spots**
Contents of this product	**1x 24V ground spot 2W 3000K**
Technical datasheet	**Digitally available on our webshop**

View instructions and technical data also on our website

TRONIX

Before first use

Before getting started with this product, it is advisable to check the order completeness and any damage. If this is the case, please contact Tronix Lighting.

Description

This 24V ground spotlight features a high-quality aluminum cover ring, which protects the CREE LEDs present. Ideal for installation in the front and backyard, in front of a facade or around the driveway.

Features

- IK08 and IP67 rated;
- 24V connection, excluding power supply;
- Extra long power cord (3m) for easy connection.

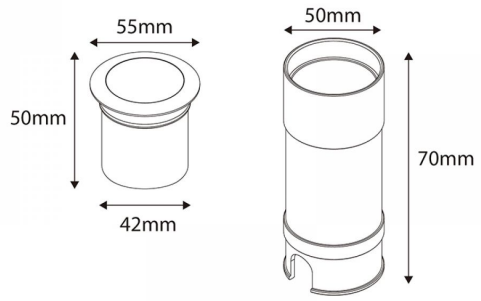

Installation

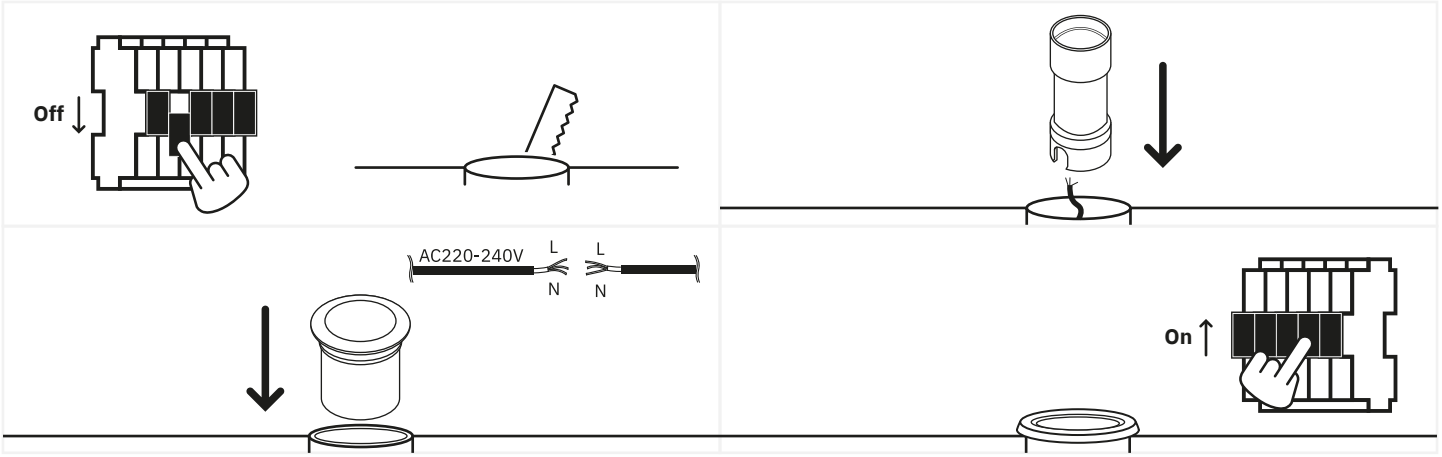

1. Turn off the power, remove the product and accompanying parts from the packaging. Then cut a hole to size to insert the ground spotlight later;
2. Check the wiring and then put it through the outer sleeve of the ground spotlight;
3. Connect the cables and place the spotlight itself in the sleeve and secure it where necessary;
4. Check the complete installation after the ground spotlight is installed. Should it be in order, the mains power can be reactivated.

Safety

Safety is a top priority at Tronix Lighting. Therefore, we heartily recommend that you follow the following steps closely:

- Keep this manual carefully for future reference;
- Choose a qualified electrician while installing, maintaining or inspecting this product;
- Never look directly into a light source to avoid possible damage to the eye;
- Always ensure that the relevant power group is on non-active when the product is connected;
- Use only recommended combinations (LED drivers, controllers or dimmers) to avoid injury or damage to the product.

Technical problems and repair

Should a product not work properly after installation, or if the product exhibits problems over time, it is advisable to check the following elements:

- Check the wiring and installation of your product;
- Check for the presence of interfering elements such as dust, water or other electronics;
- If possible, try disconnecting the product and testing it in another location to rule out a problem at the location;
- Should you be dealing with a WIFI-based product, check and reset your router's settings.

Should the product still not work after testing, it is recommended to send it in for inspection and/or repair. To do so, please contact Tronix Lighting using nearby details and proof of purchase (packing slip).

CARE SHARE CONNECT

Supplier:

Tronix Lighting B.V

Vluchtoord 41
5406 XP Uden, Netherlands

+31 (0)413 330 380
sales@tronixlighting.com

Terms and symbols (as relevant to product)

The **CE mark** indicates that this product complies with EU regulations on safety, health and environmental protection;

The **WEEE symbol** stands for "Waste Electrical and Electronic Equipment Regulation," a directive on the collection, recycling and recovery of electronic waste;

The **Class III symbol** indicates that this product features an "extra-low voltage (SELV) input and therefore does not require additional protection.

- This product has an **IP67 rating**. This means that the housing is touch-safe, provides full protection against dust and can withstand immersion (30 min at 1m).