ROBOT®

CLIMATE COMFORT SYSTEMS

MADE BY REAL HUMANS

Quick Installation Guide

Robot LTC composiet verdeler

Om aanspraak te kunnen maken op garantie dient het druktestrapport te worden ingevuld en geretourneerd naar de leverancier.
In order to claim warranty the pressure test report has to be filled in and returned to the supplier.
Um Gewährleistungsansprüche geltend zu machen, muss der ausgefüllte Druckprüfbericht an den Lieferanten zurückgesandt werden.
Pour pouvoir bénéficier de la garantie, le rapport des essais sous pression doit impérativement être remplis et renvoyer au fournisseur.

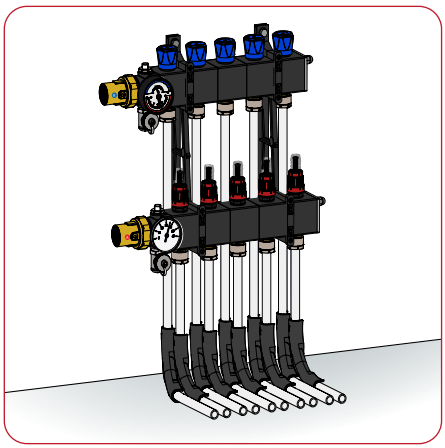

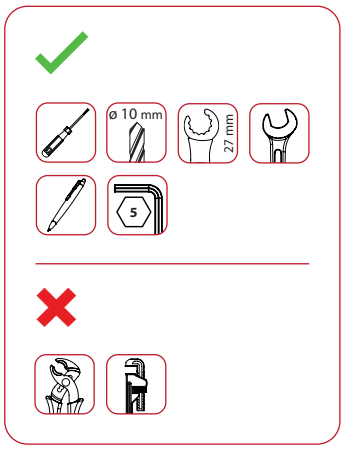

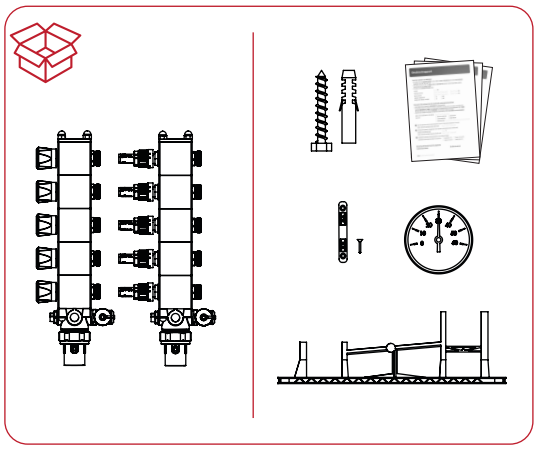

1.

Monteren
Mounting
Montage
Montage

1.1

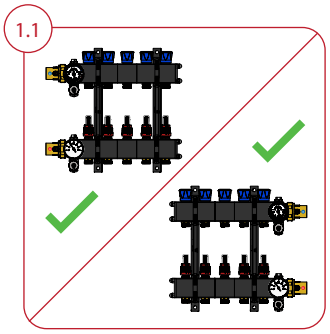

1.2

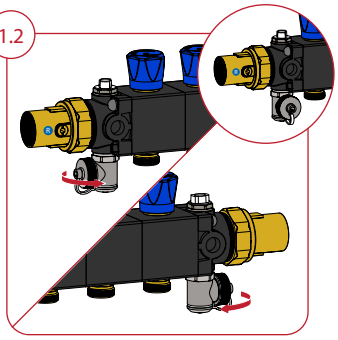

Optioneel / Optional / En option

1.3

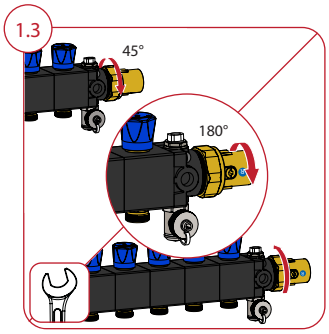

Optioneel / Optional / En option

1.4

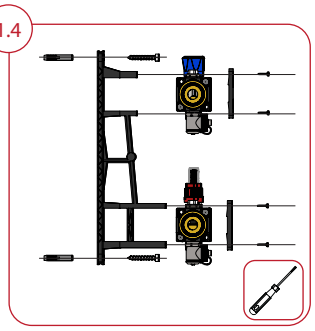

1.5

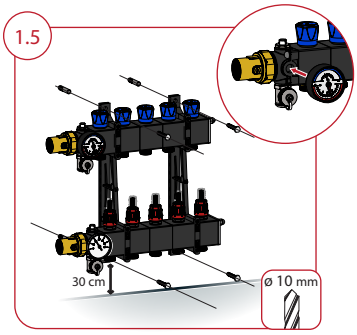

2.

Aansluiten
Connecting
Anschließen
Raccordement

2.1

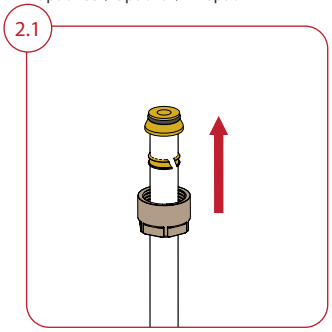

2.2

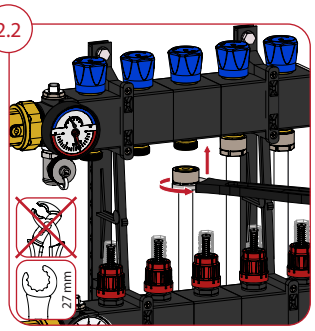

2.3

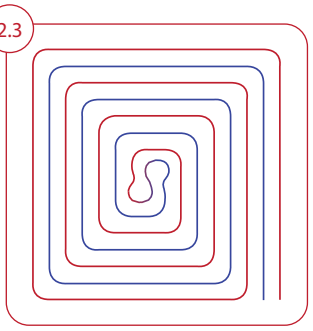

2.4

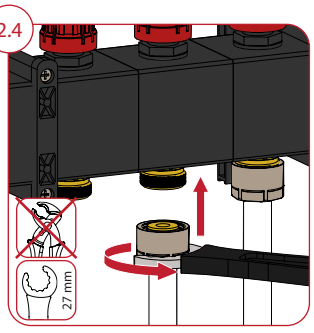

2.5

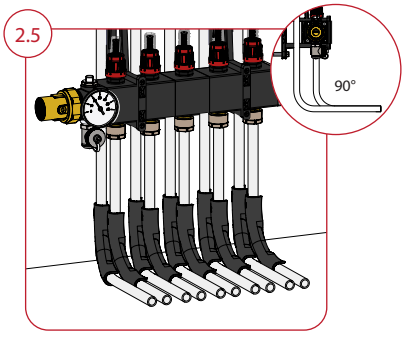

ROBOT®

CLIMATE COMFORT SYSTEMS

MADE BY REAL HUMANS

Quick Installation Guide

Robot LTC composiet verdeler

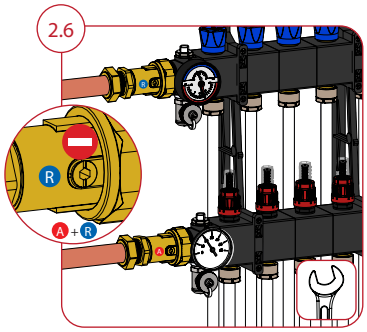

3.

Vullen / Filling
Spoelen / Flushing
Ontluchten / Venting

Befüllen / Remplir
Spülen / Rincer
Entlüften / Purger

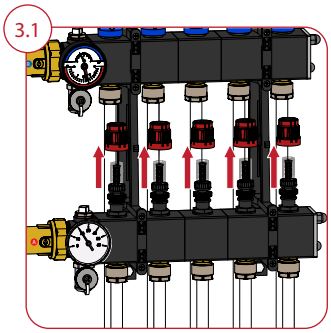

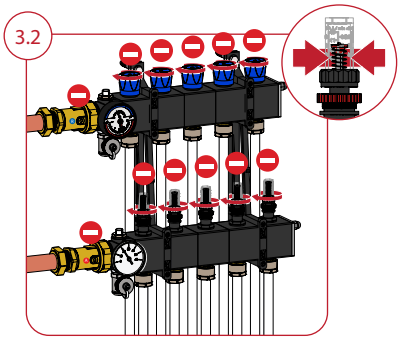

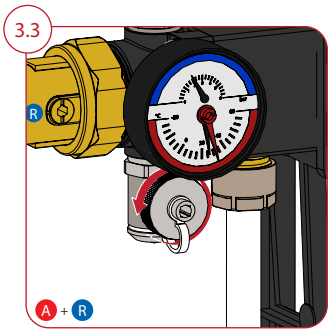

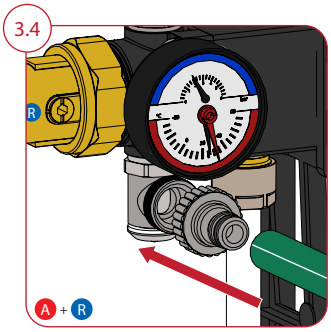

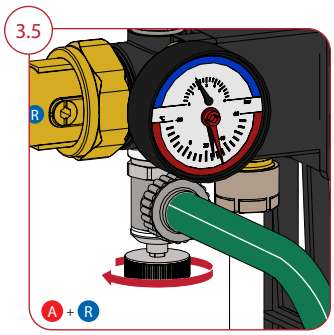

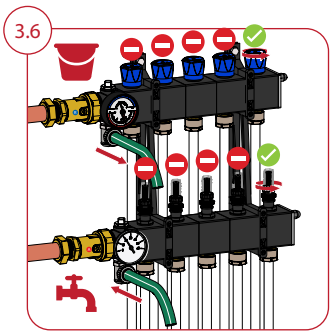

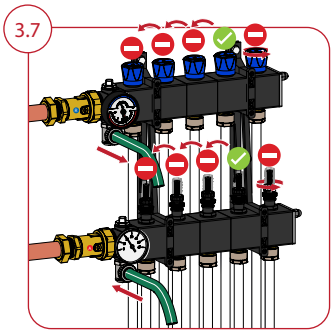

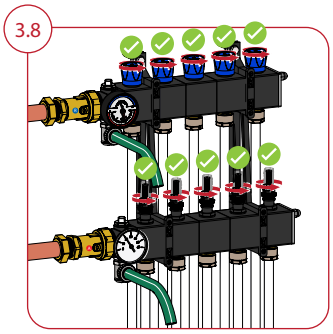

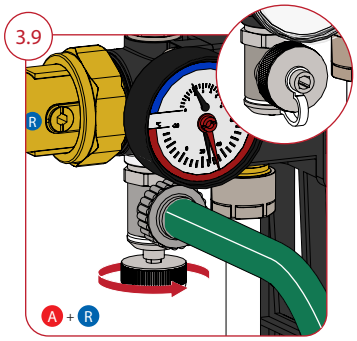

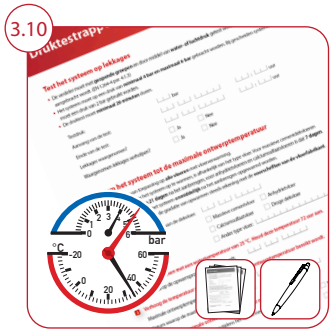

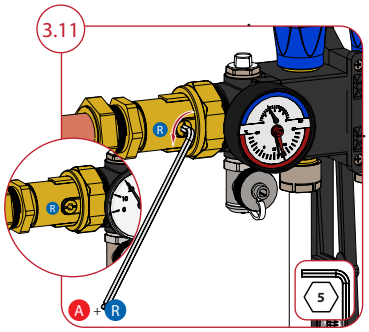

4.

Inregelen
Adjusting
Regulierung
Réglage

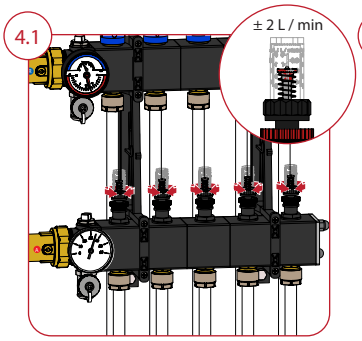

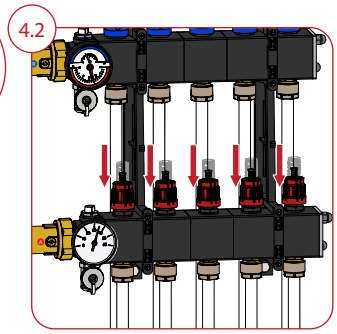

These instructions are protected by copyright. All rights reserved. It may not be copied, reproduced, abbreviated or transmitted, neither in whole nor in parts, in any form, neither mechanically nor electronically, without the previous consent of the manufacterer. No liability accepted for errors or misprints.

CONTACT:

Kelvinring 56a
NL, 2952 BG Alblasserdam

t +31 (0)78 641 1619
f +31 (0)78 641 3636

www.robotclimate.com
info@robotclimate.com