Manual

wave DUAL

Manual
Wave Dual

Table of Contents

Introduction 3

About this document 3
Other relevant documents 3
Symbols used in this manual 3

Warranty and liability 3

Warranty 3
Liability 3

Product information 4

Intended use 4
Specifications 4
Solar panel flange dimensions 4
Requirements for the work environment 5

System and application 6

1. Components 6

Safety 7

1. Personal protective equipment 7
2. Safety warnings and regulations 7

Installation 8

1. Preparation 8
2. Place the units 10
3. Connect units with stabilizers 13
4. Place permanent ballast 15
5. Lightning protection 22
6. Mounting the first solar panel 23
7. Mounting the following solar panels 25
8. Installing wind deflectors 27

Annexes 31

A. Cable management 31
B. Grounding, equipotential bonding and lightning protection 32
C. Lightning protection 33
D. Removal and recycling 37

Introduction

About this document

This manual covers the installation instructions for the CPX Wave mounting system for solar panels on flat roofs with roofing materials made of concrete, bitumen, EPDM, PVC and TPO. For other roof materials, please contact your supplier.

The mounting system is suitable for mounting solar panels in a dual landscape orientation.

These instructions are addressed at qualified technical personnel.

You can download the latest version of this manual from www.cpx.eu.

Other relevant documents

When installing the CPX Wave mounting system, you will need the following documents in addition to this manual:

- The project plan, which you can create in the calculator at https://calculator.cpx.eu.
- The installation manuals for the solar panels, inverters and any other components.

During the installation of the mounting system, it is important to adhere to the installation manual and the accompanying standards to prevent accidents. Pay special attention to (local) standards, regulations and legislation (among others):

- Local Building Regulations (latest version)
- Health and Safety at Work etc Act 1974
- Health and Safety in Roof work - HSE
- Eurocodes 0 (EN 1990 - Structural Design)
- Eurocodes 1 (EN 1991 - (Influences on structures)
- HD-IEC 60364 series - Electrical installations for low voltage
- EN-IEC 62305-2 - Protection lightning - Risk Management
- MIS 3002 – The solar PV standard
- MCS012 - Product Certification Scheme Requirements: Pitched Roof Installation Kits

Symbols used in this manual

	Warning!	Failure to follow this instruction could result in serious injury or major damage to the product.
	Caution!	Failure to follow this instruction could result in personal injury or damage to the product.
	Note	Emphasises an instruction.

Warranty and liability

Warranty

CPX extends a 20 year product warranty. The warranty is subject to the warranty terms and general terms & conditions of CPX. These can be found on the website www.cpx.eu.

Liability

CPX accepts no liability for damage or injury caused by the failure to comply (strictly) with the safety guidelines and instructions in this manual, or by negligence during installation of the product and the accessories listed in this document.

CPX reserves the right to change this document without notice.

Product information

Intended use

The CPX Wave Dual mounting system is intended for mounting solar panels on flat roofs. With this mounting system you can install solar panels with the long side at the bottom (landscape). The mounting system is intended to be installed in a dual arrangement.

Specifications

Orientation of solar panels	Landscape
Frame height of solar panel	29 - 50mm
Maximum dimensions of solar panels	Length: 1550 mm - 2500 mm Wave Dual 2P 990-1070: Width: 990 mm - 1070 mm Wave Dual 2P 1070-1150: Width: 1070 mm - 1150 mm
Maximum field size	40 × 40 m per segment
Roof material	Concrete Bitumen EPDM PVC TPO
Roof pitch	0 - 5° ! If your roof slope is > 5°, please contact your supplier.
Maximum roof height	i Subject to Eurocode guidelines and national additions. Use the calculator to calculate the possibilities of your project.
Edge zone	! Calculate the edge zone with the calculator. The distance of the solar panels to the edge of the roof should be approximately 1/5 of the height of the building with a minimum distance of 30 cm, due to highly turbulent wind currents in this zone. No solar panels may be installed in this zone, whether entirely or in part.

Solar panel flange dimensions

a [mm]	c [mm]	b [mm]
1,2	18,3	35
1,3	17,7	35
1,4	17,2	35
1,5	16,6	35
1,6	16,0	35
1,7	15,4	35
1,8	15,9	35
1,9	14,3	35
2,0	13,7	35
2,1	13,1	35
2,2	12,6	35
2,3	12,0	35
2,4	11,4	35
2,5	10,8	35
2,6	10,3	35
2,7	9,7	35
2,8	9,1	35

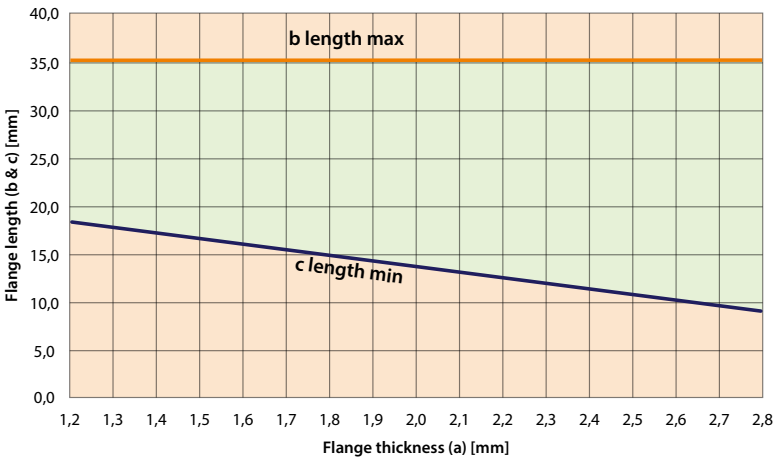

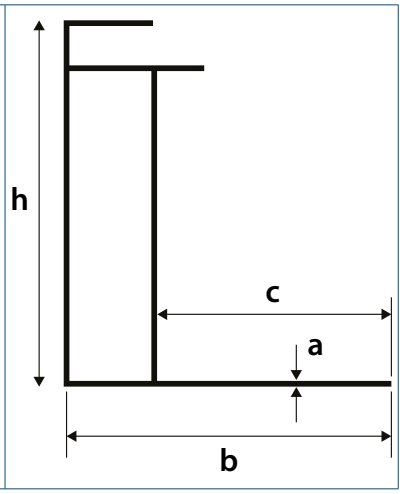

! Enter the data in the calculator, so you are sure of choosing the right system for the terrain category, snow loads and wind zone that applies to your project.

i If your project has different specifications than these, please contact CPX.

Requirements for the work environment

☐	The roof is in good condition.
☐	The roof construction has sufficient bearing capacity to support the installation, taking into account wind and snow loads.

System and application

1. Components

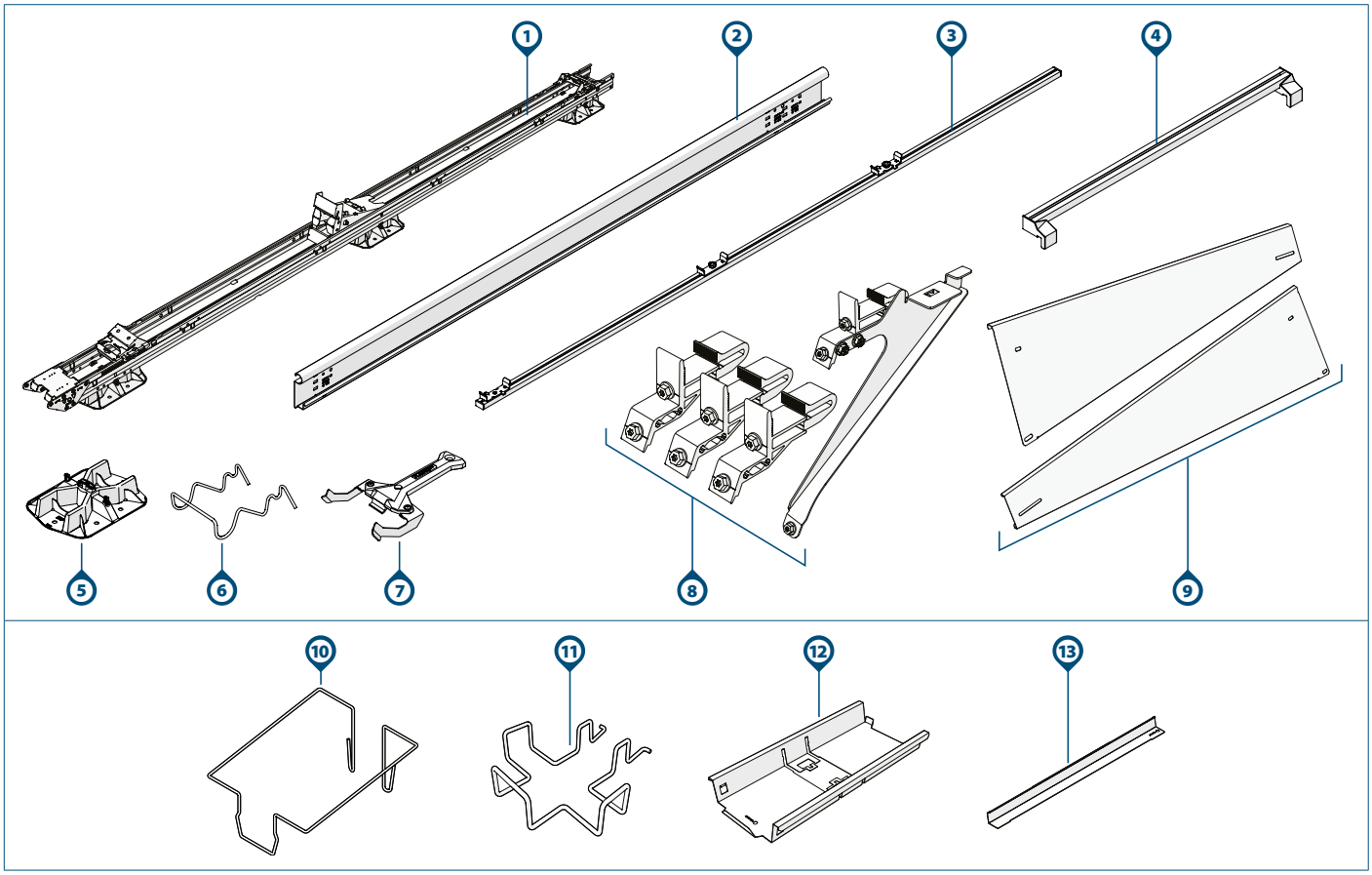

Component	Article number	Component	Article number
1) a. Wave Dual 2P 990-1070	1009147	6) Wave Cable Bracket - Stabilizer	1009124
b. Wave Dual 2P 1070-1150	1009157	7) Wave Module Unlock Tool	1009142
2) a. Wave Stabilizer 2900	1009110	8) Wave Wind Deflector Clamps	1009153
b. Wave Stabilizer 3530	1009111	9) a. Wave Wind Deflector Set 990-1070	1009148
c. Wave Stabilizer 4000	1009114	b. Wave Wind Deflector Set 1070-1150	1009158
d. Wave Stabilizer 4350	1009115	10) Wave Ballast Bracket	1009123
3) Wave Measuring Bar 2500mm	1009143	11) Wave Ballast Bracket Perimeter	1009126
4) Wave Spacer Tool	1009144	12) Wave Ballast Tray	1009129
5) Wave Base Plate	1009120	13) Wave Ballast Tray Extender	1009130

Check that the correct components are present in the required numbers according to the project plan generated by the calculator.

For situations where a PV system needs to be connected to the lightning collection system, see Chapter 5. and Appendix Lightning protection for more information.

Safety

1. Personal protective equipment

	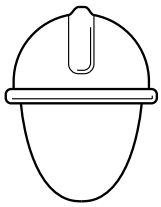				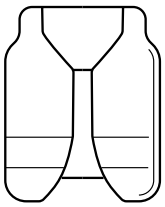	
Hearing protection	Safety helmet	Safety glasses	Face masks	Safety gloves	Safety clothing	Safety shoes

Warning!

2. Safety warnings and regulations

- Installation work should always be carried out by at least two skilled people.
- Do not use components from other mounting systems.
- Do not leave out parts.
- Always work according to the current regulations for working on roofs.
- Do not perform the installation in strong winds, or when the roof is slippery or wet.
- Always work on the roof with fall protection and, if necessary, with safety nets and edge protection.
- Never stand on or in the gutter.
- Always use a lifting aid or hoisting device when moving heavy equipment.
- Always place ladders on a strong, stable surface.

Caution!

- Walk as little as possible on the roof. Use an aerial platform, ladder or other solution.
- Never walk on the system or on the solar panels.
- CPX is in no way responsible for the installation and/or connection of lightning protection on the roof. Get expert advice from your specialist and ensure that a safe installation can be guaranteed according to EN-IEC 62305 and HD-IEC 60364.

Installation

1. Preparation

1	Inspect the roof.
☐	The roof is in good condition.
☐	The roof construction has sufficient bearing capacity to support the installation, taking into account wind and snow loads.

2	Check the project plan and components.
☐	Check the project plan. Is there no project plan? Then create one in the online calculator before starting installation.
☐	Check that all components are present (page 5).

3 Make sure all the required tools are at hand.

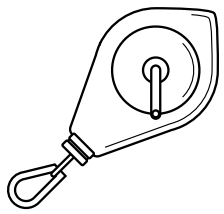	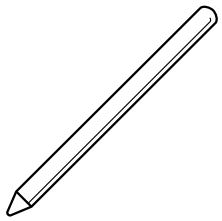	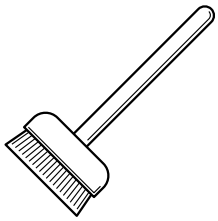	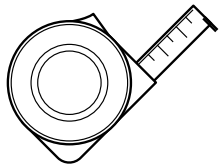	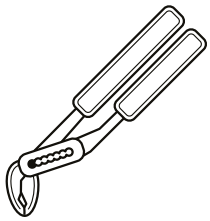
Chalkline tool	Marker or chalk	Broom	Tape measure	Pliers

4	Measure the length of the solar panels and check the corresponding length of the rear deflector.
1550 - 1765 mm	Wave Single Rear Deflector 1525
1765 - 1920 mm	Wave Single Rear Deflector 1700
1920 - 2105 mm	Wave Single Rear Deflector 1875
2105 - 2300 mm	Wave Single Rear Deflector 2075
2300 - 2500 mm	Wave Single Rear Deflector 2225

5 Clean and tidy the roof.

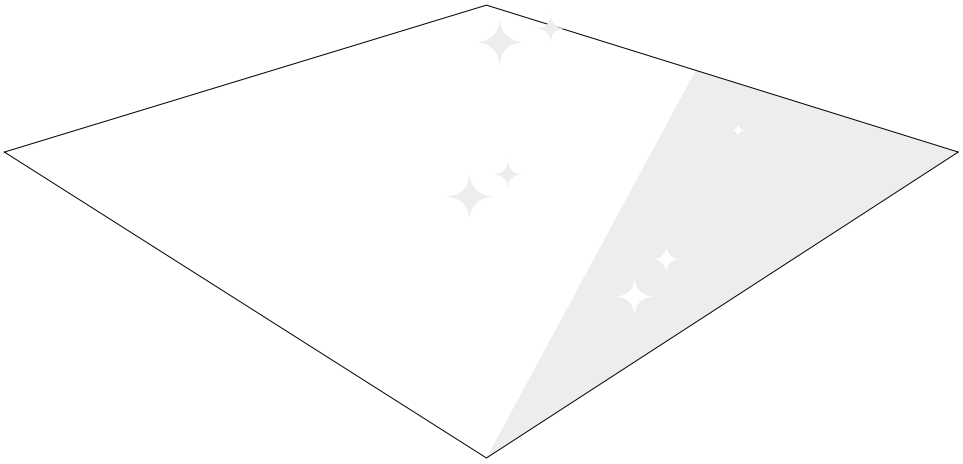

6 Draw the lines of the field and make note of the orientation of the north arrow.

Use the 3-4-5 rule to make sure the angle between your perpendicular lines is 90 degrees.

Consult the project plan to determine the position of the units for your project.

Take the starting point of the installation from the project plan.

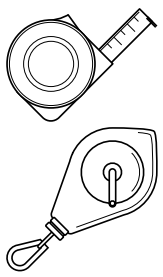

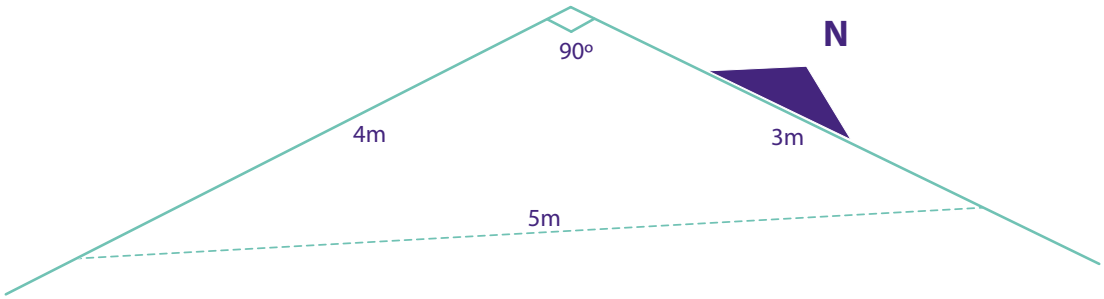

7 Mark the position of the first Wave unit.

Be mindful of the no-go zone. Consult the project plan to determine the position of the first unit.

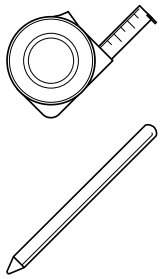

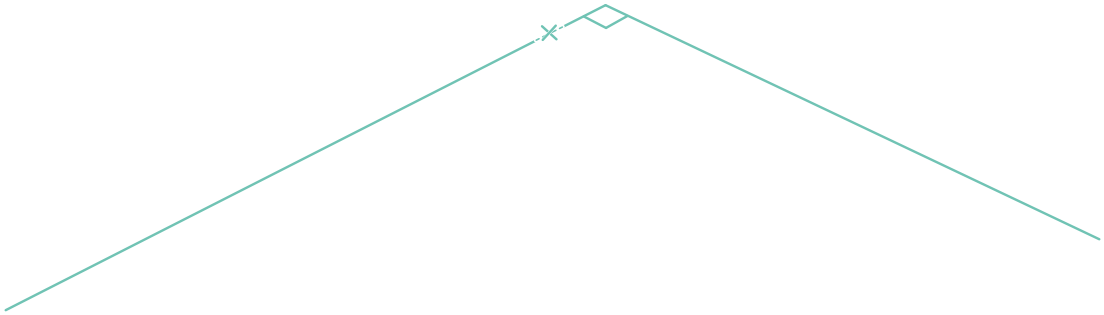

8 Align the "B"-marked side of the first and third bracket of the measuring bar to the corners of a solar panel.

Alternatively, use a tape measure and check the project plan for the specified distance "B".

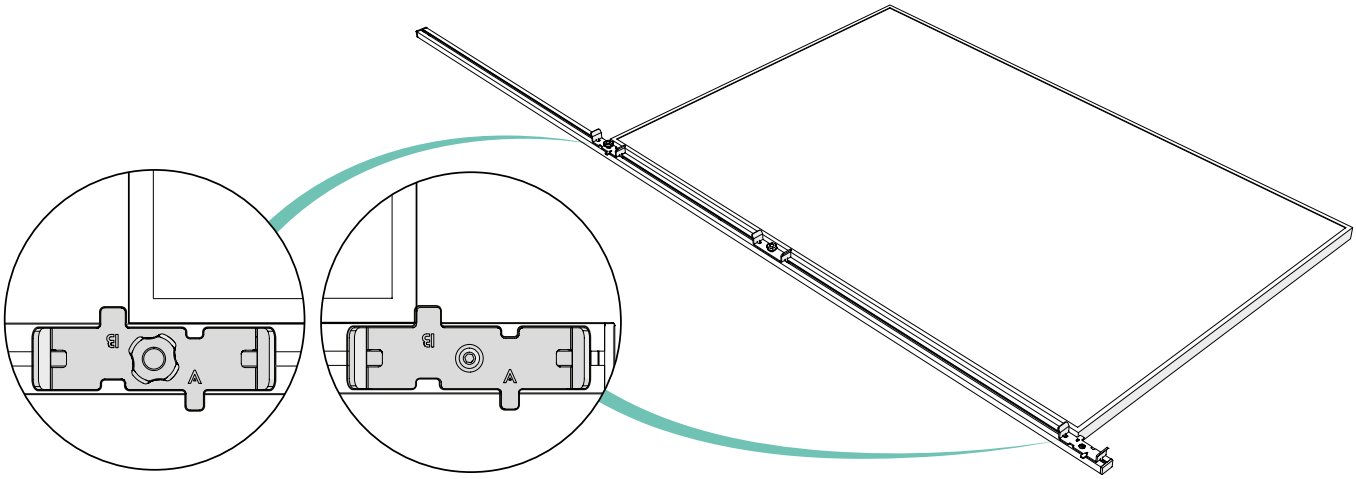

9 Adjust the centre bracket to the distance "A" as specified in the project plan.

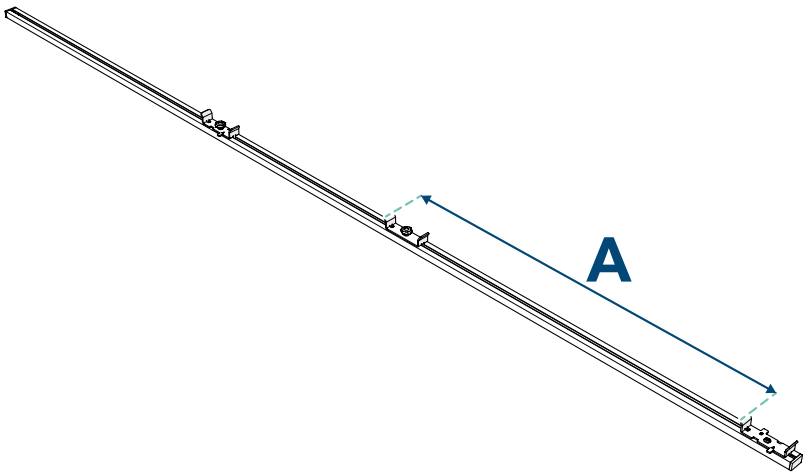

10 Duplicate the distances "A" and "B" for all measuring bars.

Tip: often, six measuring bars are used to easily align and install the units and the solar panels.

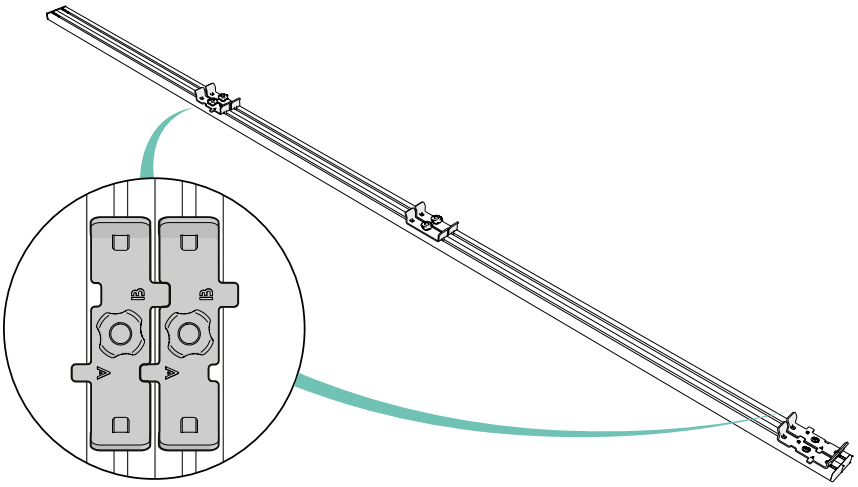

2. Place the units

1 Place the first unit on the roof and align the unit with the marked lines.

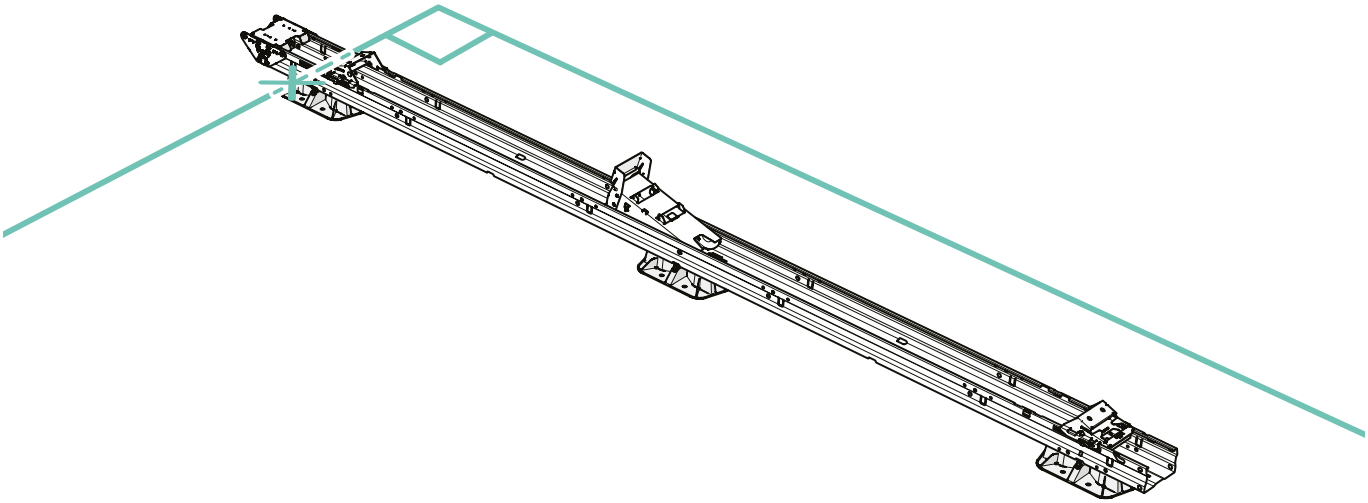

2 Tilt up the high base until it clicks into upright position.

- ! While doing this, squeeze the unit to ensure that the hooks of the high base hook into the groove of the unit.
- ! Check that the unit is still aligned with the perpendicular lines.

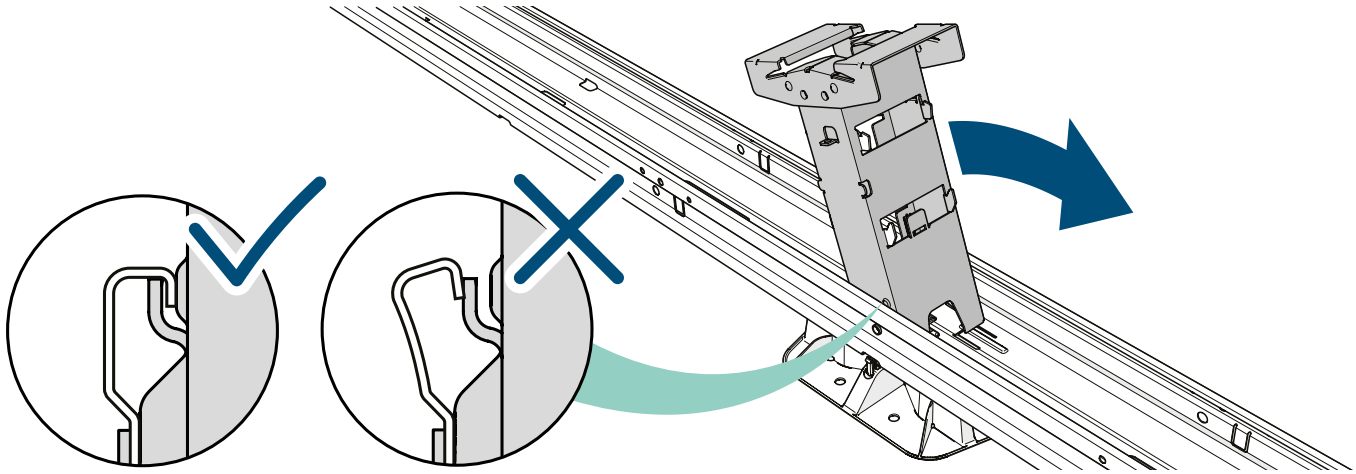

3 Place (temporary) ballast to prevent the unit from accidentally moving.

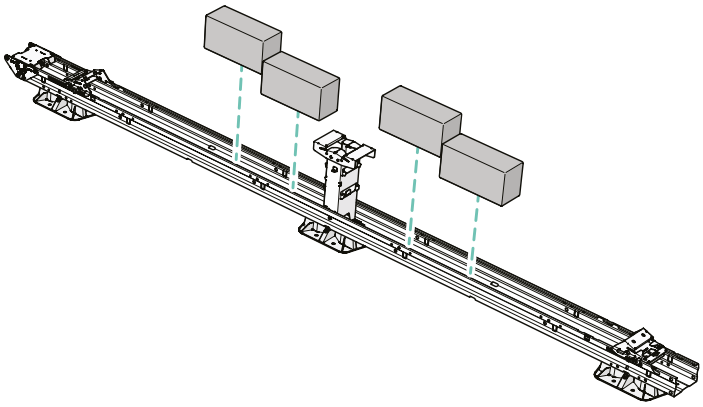

4 Place the next two units on the roof.

For installation on a location with high snow loads: Consult the project plan to determine if an additional third unit needs to be placed in the center of each solar panel. This helps prevent damage caused by excessive snow load.

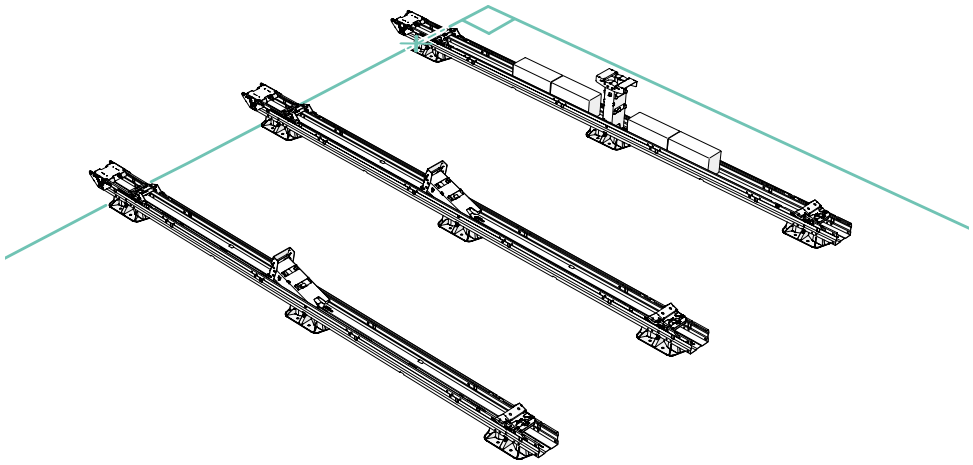

Repeat step 2.2. Tilt up the high base until it clicks into upright position.

5 Use measuring bars to determine the distance between the units

Ensure correct orientation of the measuring bars.

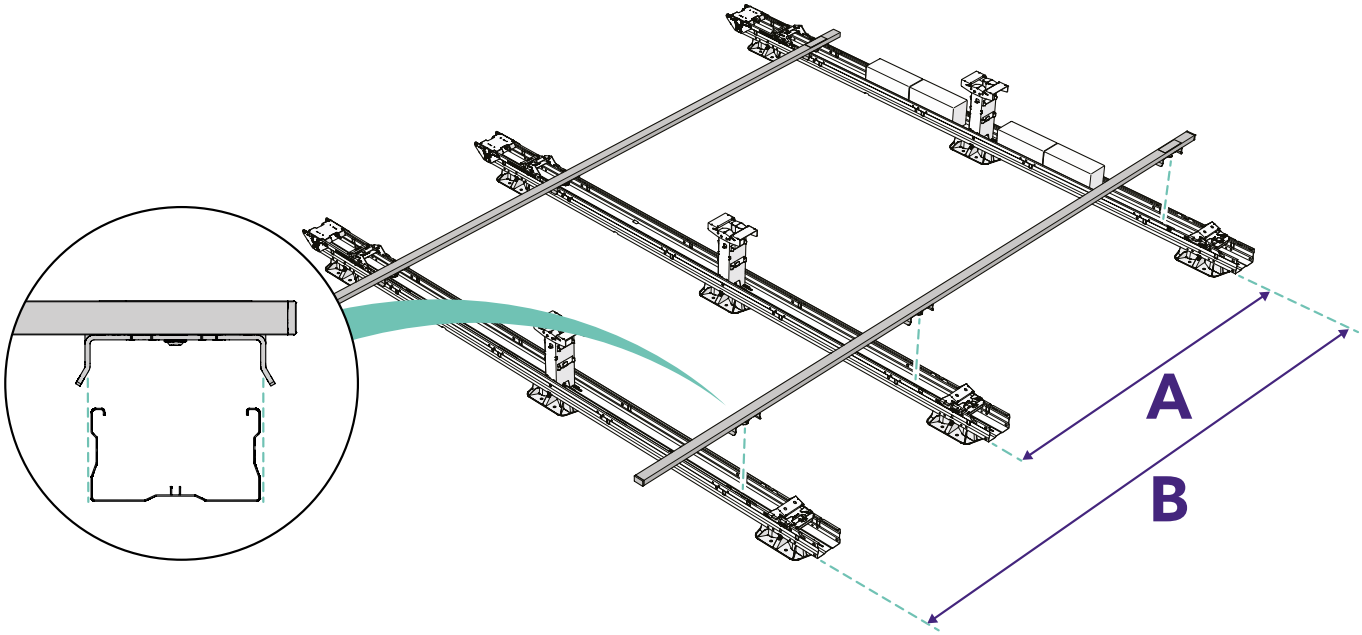

Repeat step 2.3. Place (temporary) ballast to prevent the unit from accidentally moving.

Repeat step 2.4. Place the next two units on the roof.

Repeat step 2.5. Use measuring bars to determine the distance between the units

Repeat step 2.2. Tilt up the high base until it clicks into upright position.

6 Use measuring bars to determine the distance between the units

Ensure correct orientation of the measuring bars.

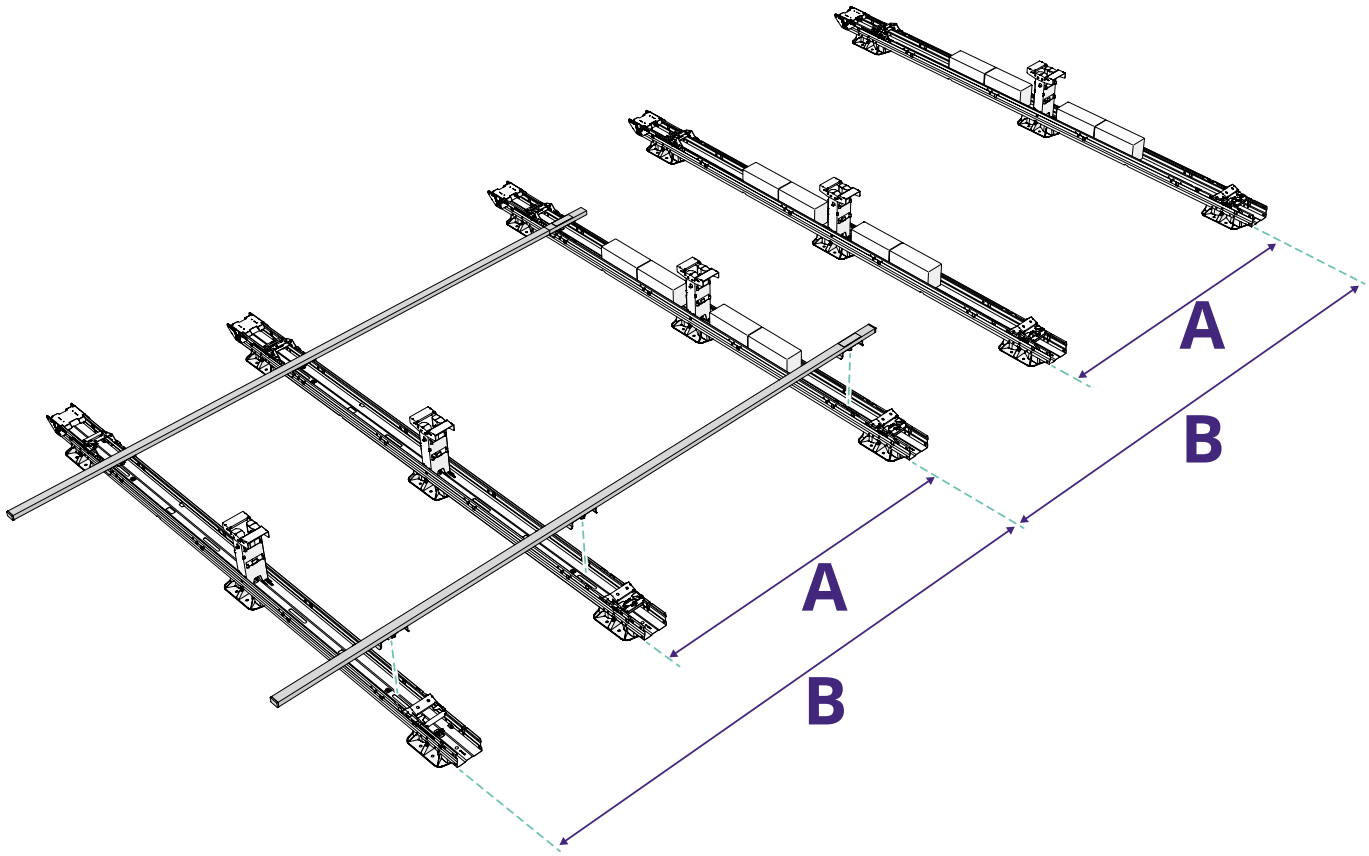

Repeat step 2.3. Place (temporary) ballast to prevent the unit from accidentally moving.

3. Connect units with stabilizers

1 Fit stabilizers to each high base of the first four units.

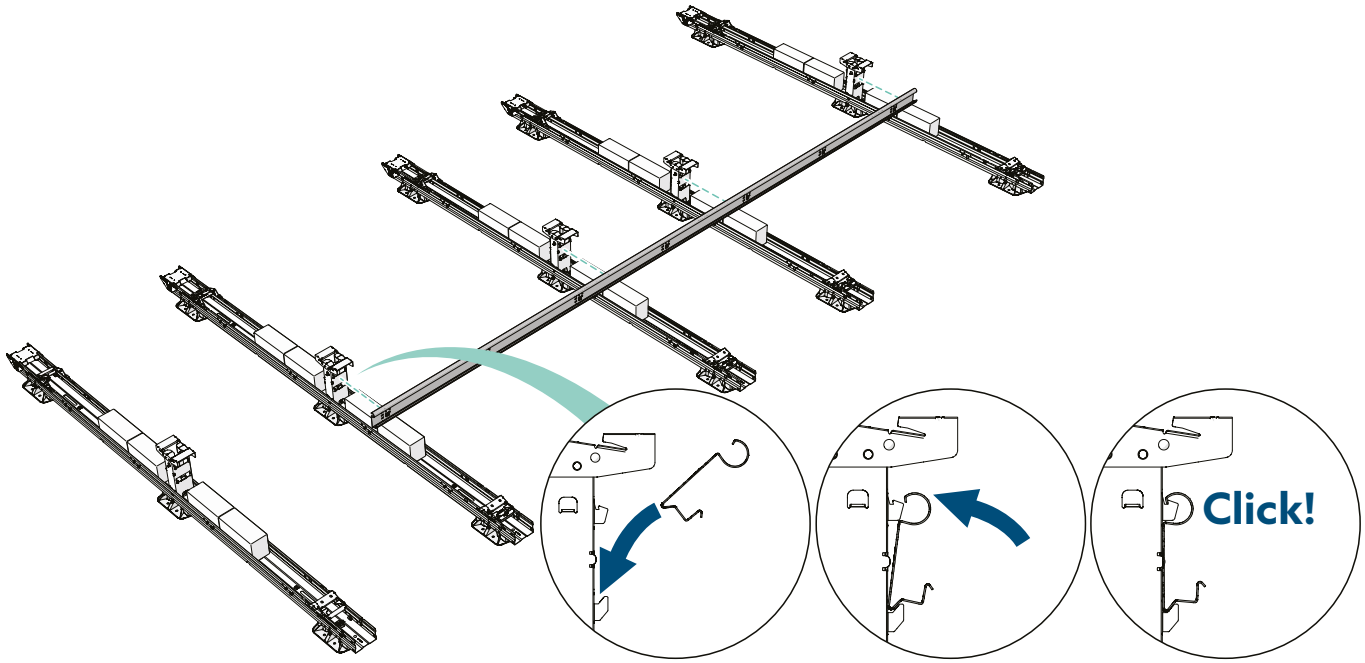

2 Attach the other stabilizers so that each stabilizer overlaps preceding stabilizer over two high bases

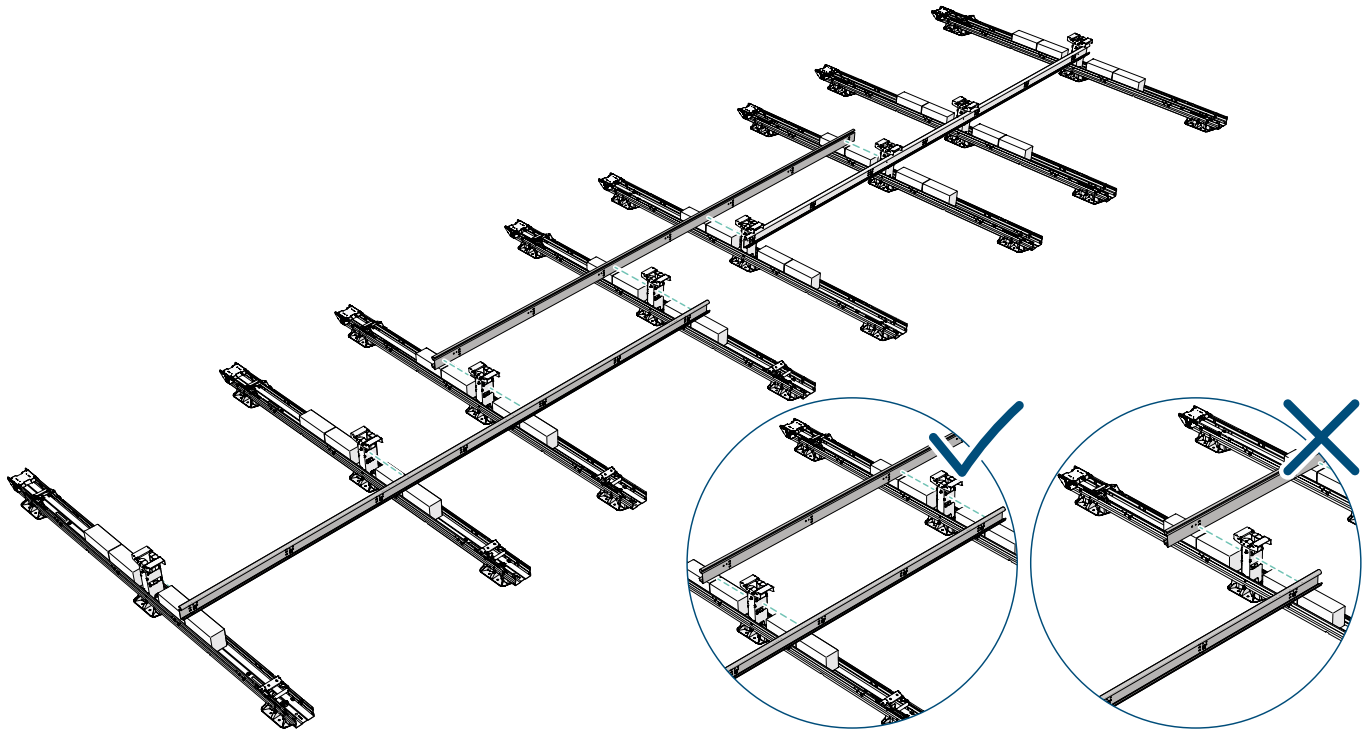

3 Install cable brackets to the rear of the rear stabilizer to bridge the gap between two stabilizers

See Annex B: Cable management for more information on cable management.

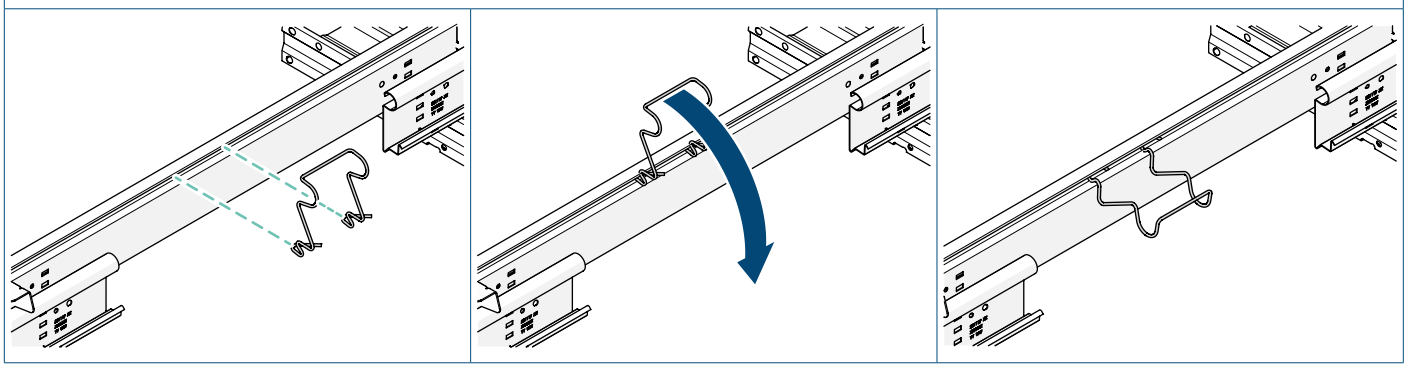

4 Extend the segment by attaching another unit using the pre-installed coupler

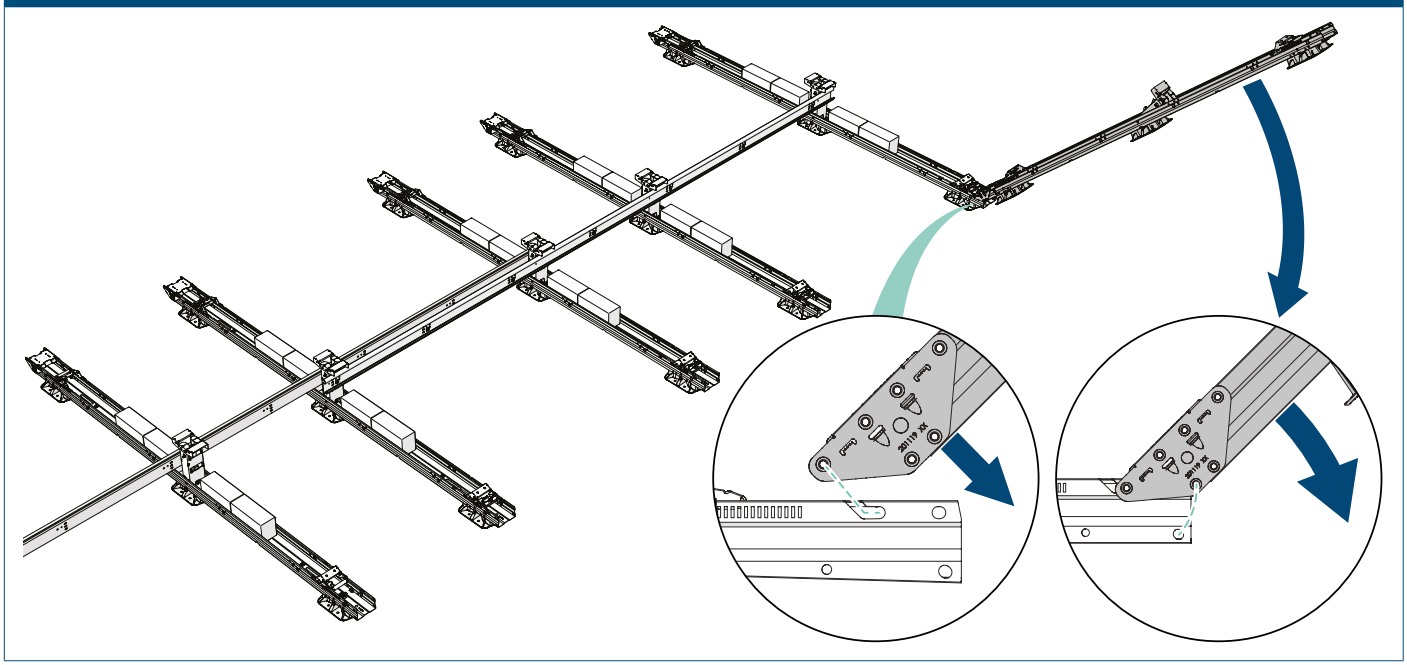

5 Optional: Place an extra base plate under the unit where necessary

Check the project plan to see if additional base plates have been added under the units to reduce the concentrated load on the roof.

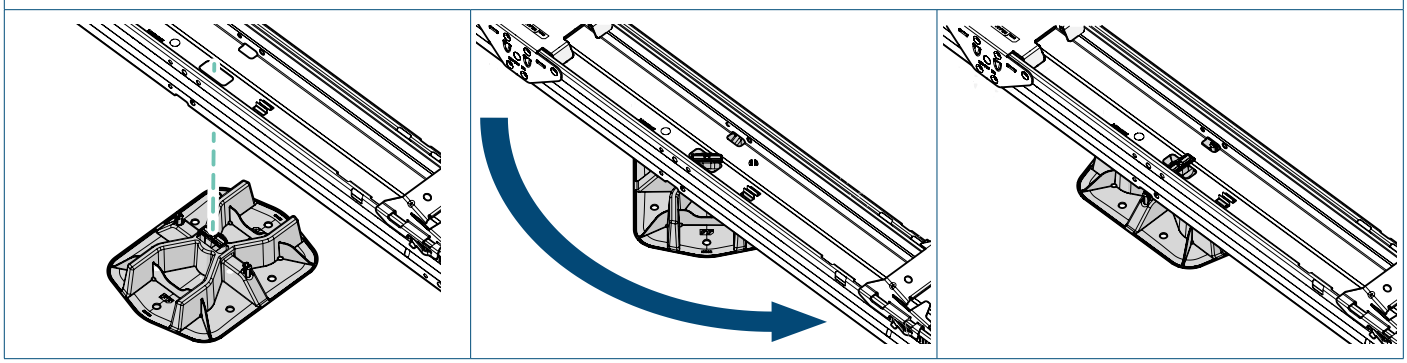

4. Place permanent ballast

The calculator determines the ballast needed for your project. Follow the instructions from the project plan determined by the calculator.

In this chapter we provide a general description of the five possible positions for the ballast.

! If anything changes in the layout of the solar panel field, the ballasting has to be recalculated.

Position A	Position B	Position C	Position D	Position E
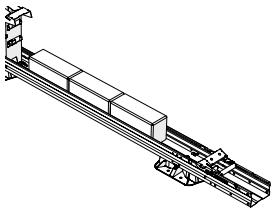	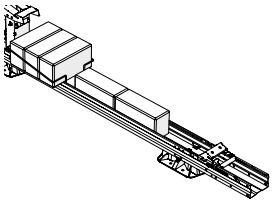	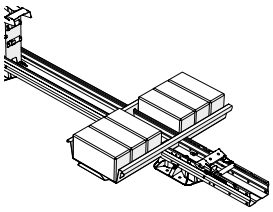	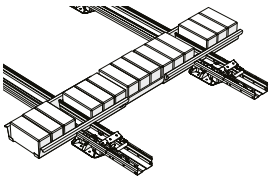	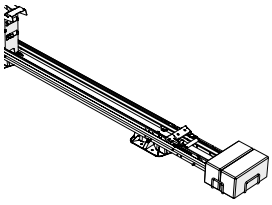
See project plan: "U; XX kg" (Unit)	See project plan: "B; XX kg" (Bracket)	See project plan: "T; XX kg" (Tray)	See project plan: "E; XX kg" (Extender)	See project plan: "P; XX kg" (Perimeter)

Position A In the units

1 Place the ballast in the unit.

! Place a maximum of three bricks in the unit. A fourth brick will not fit under the solar panel.

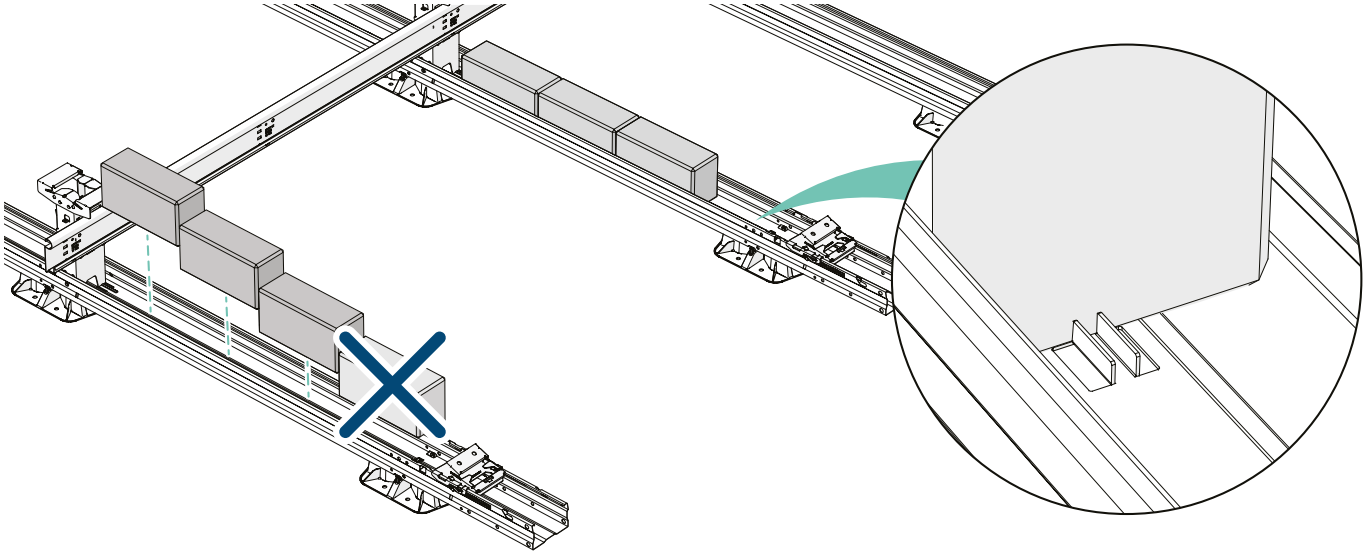

Position B In ballast brackets

1 Squeeze the hooks of the ballast bracket together and place the bracket next to the high base in the unit.

! Do not position the ballast bracket on the locking tab of the high base. This can unlock the high base compromising the structural strength.

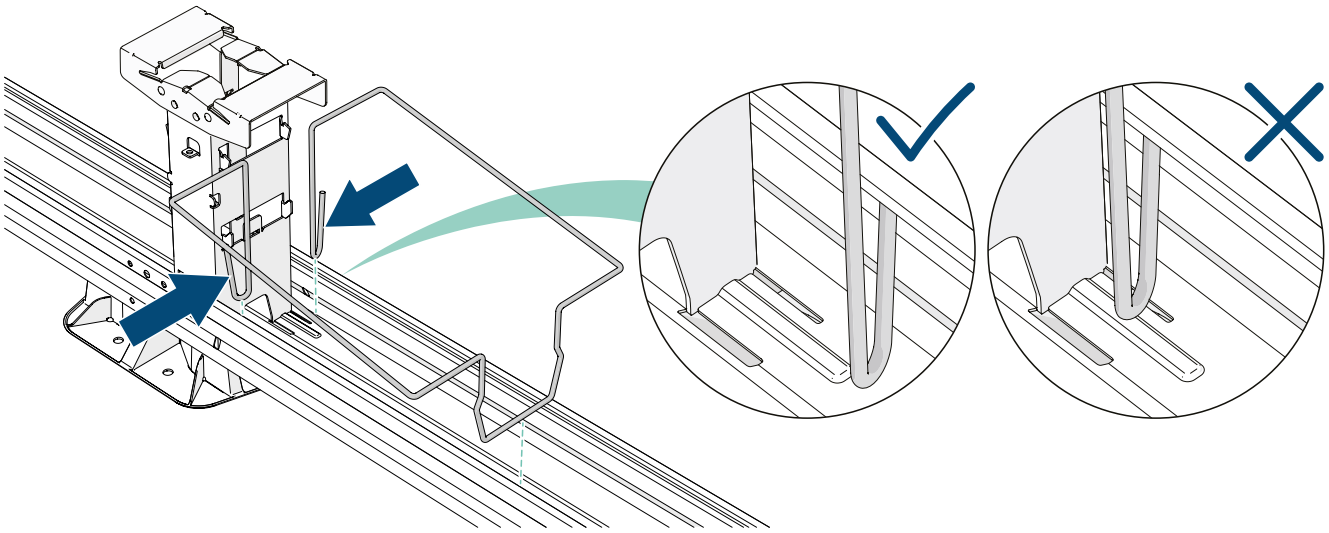

2 Fill the ballast bracket and, if necessary, the unit with bricks.

! Place a maximum of two bricks in the unit in combination with the ballast bracket. A third brick will not fit under the solar panel.

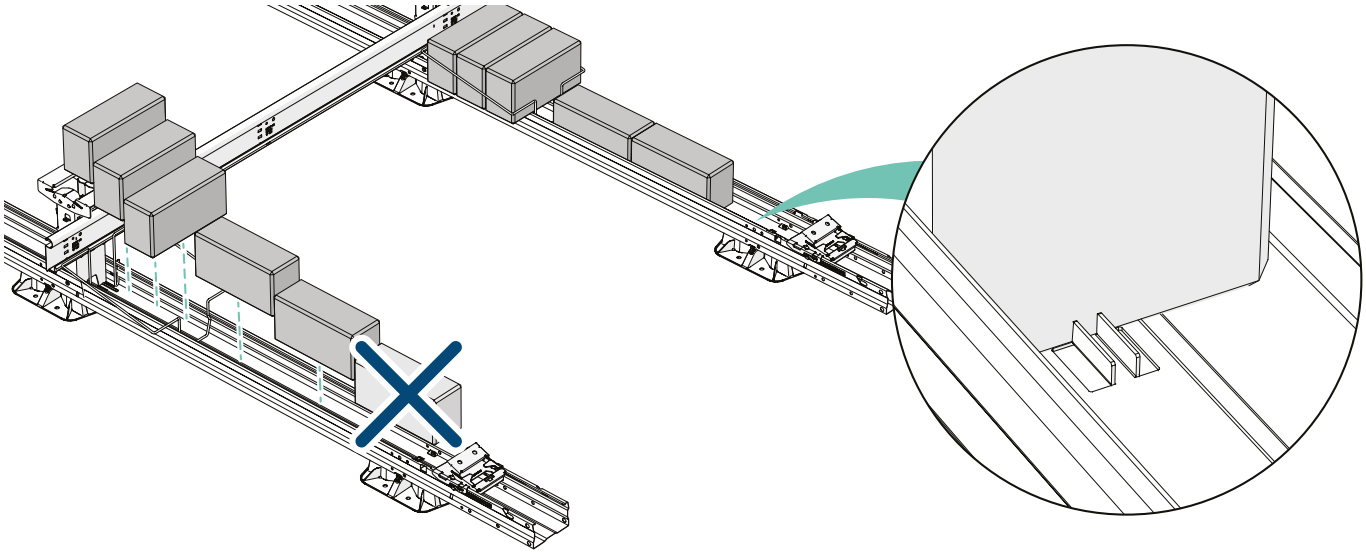

Position C In ballast trays

1 Push the ballast tray over the unit in the position specified in the project plan.

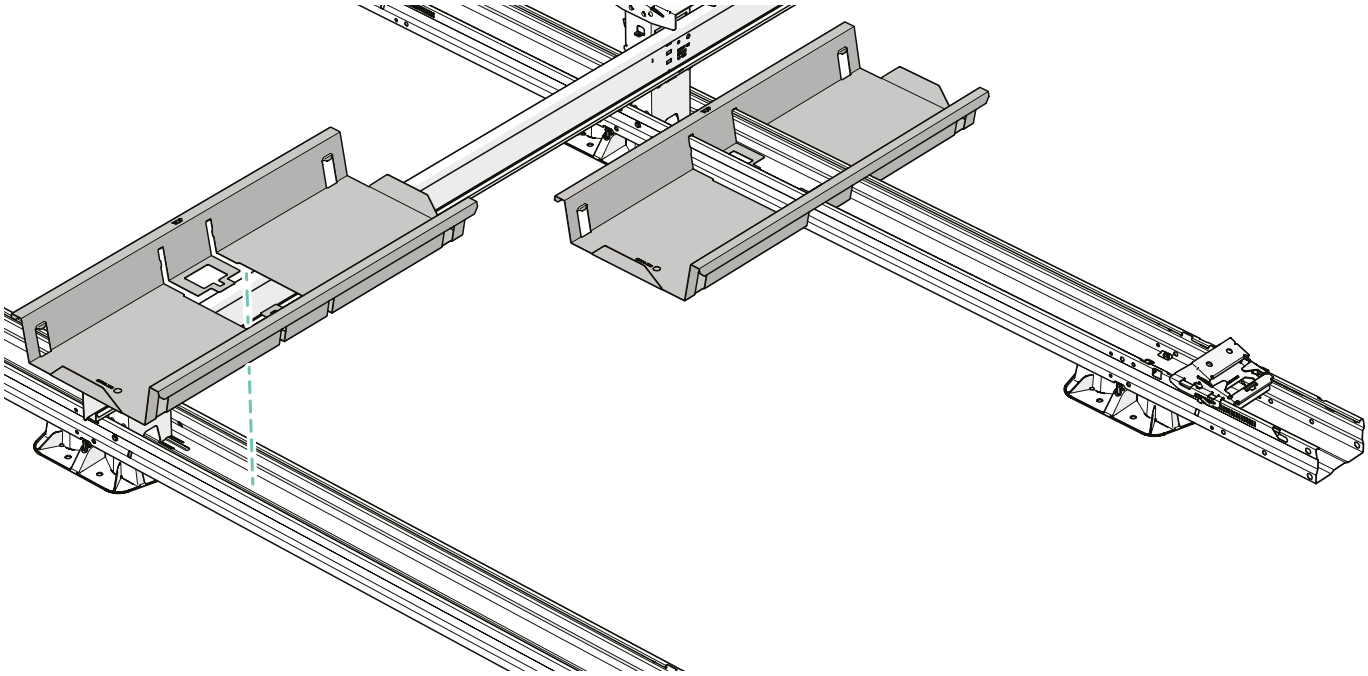

2 Fill the ballast tray with bricks.

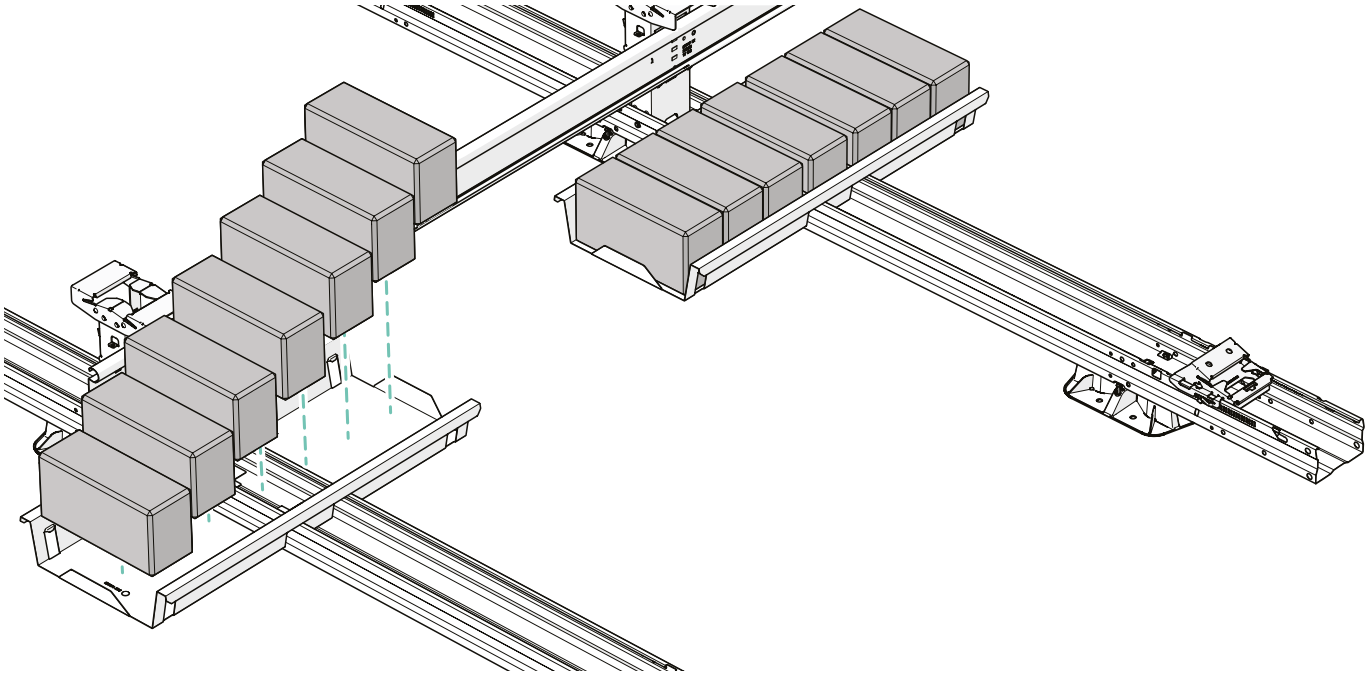

3 If the project plan specifies more than one ballast tray, slide the outer ballast tray against the tabs in the unit. In this array you can place a maximum of three ballast trays in a row.

Place the bricks in the outer ballast tray on the flat side, otherwise they will not fit under the solar panel.

Follow the project plan for the required positions and quantities of ballast.

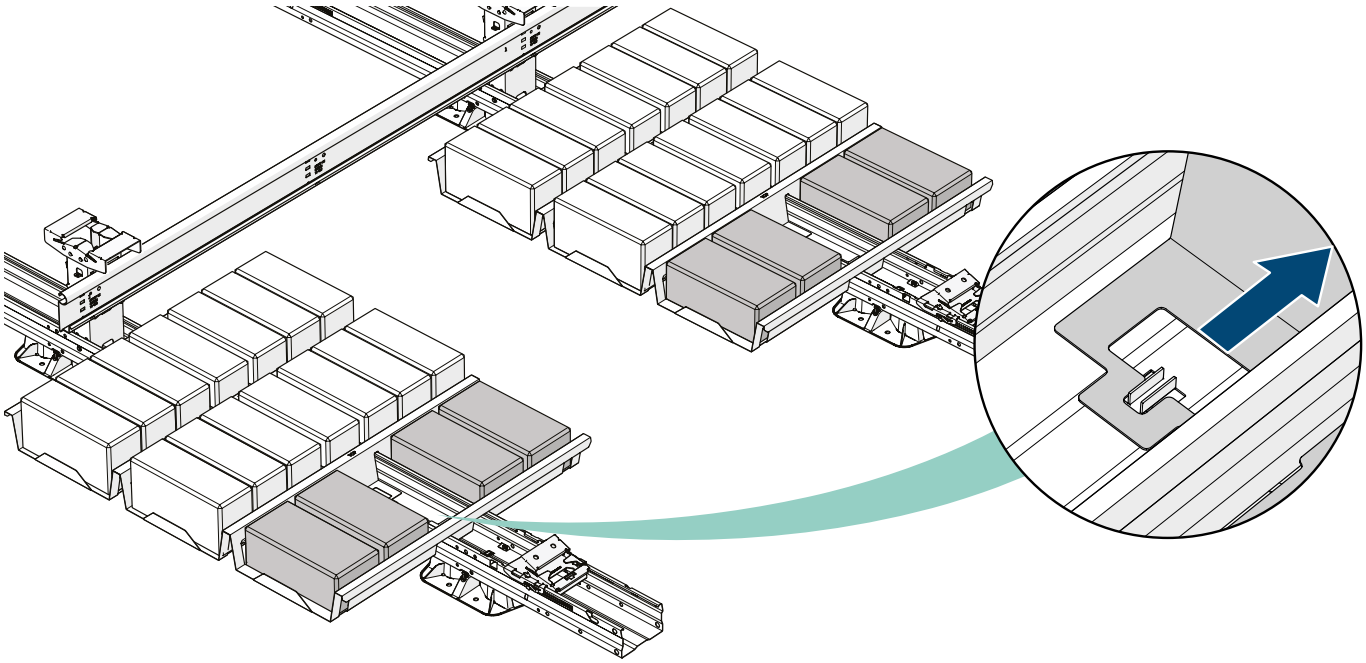

Position D In ballast trays with ballast tray extenders

1 Push the ballast tray over the unit in the position specified in the project plan.

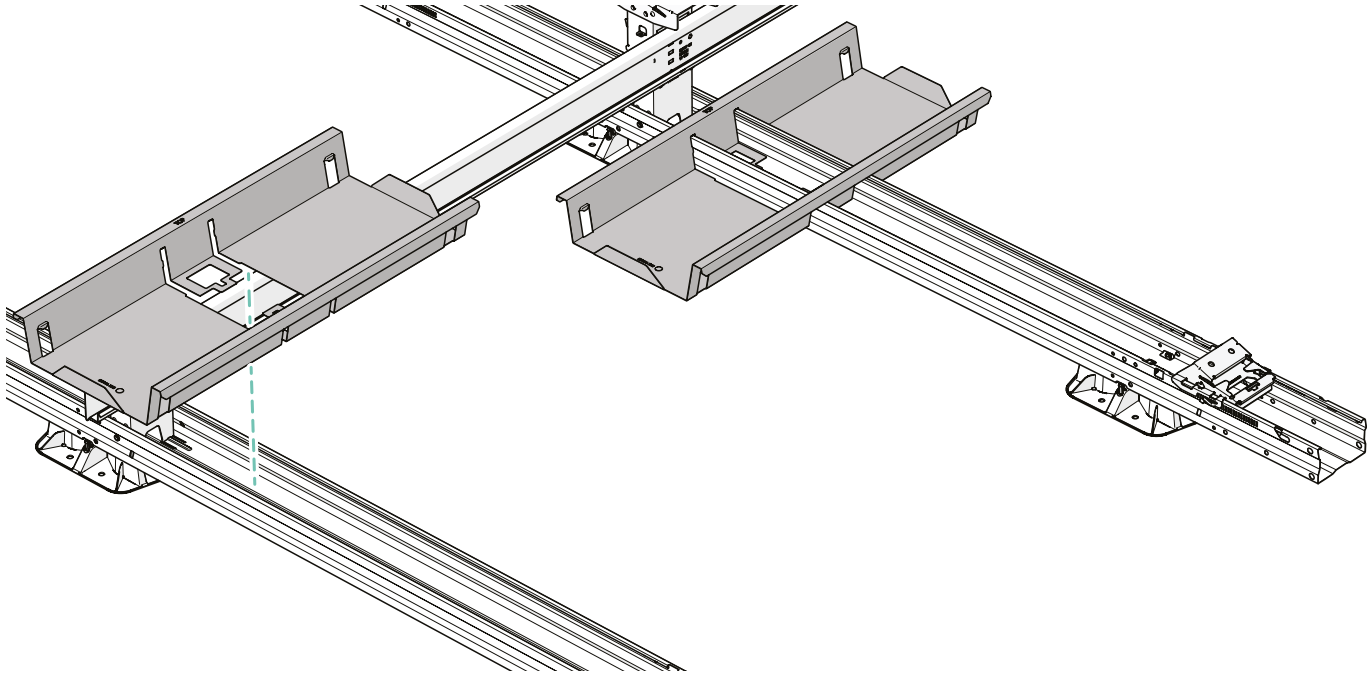

2 Connect two ballast trays together with the ballast tray extender.

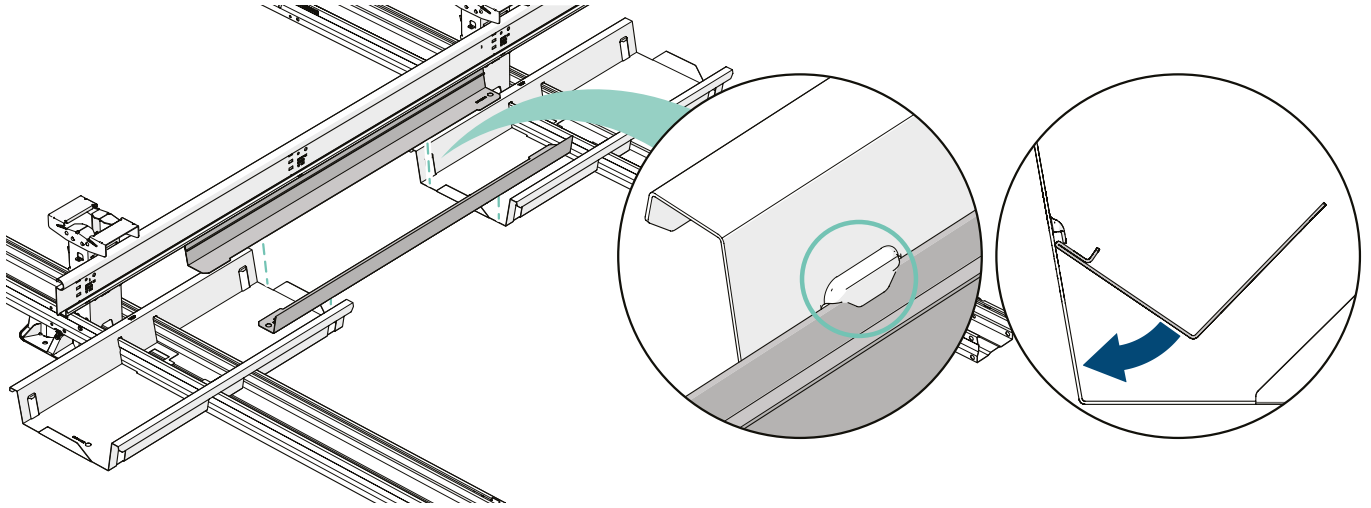

3 Fill the ballast trays with bricks.

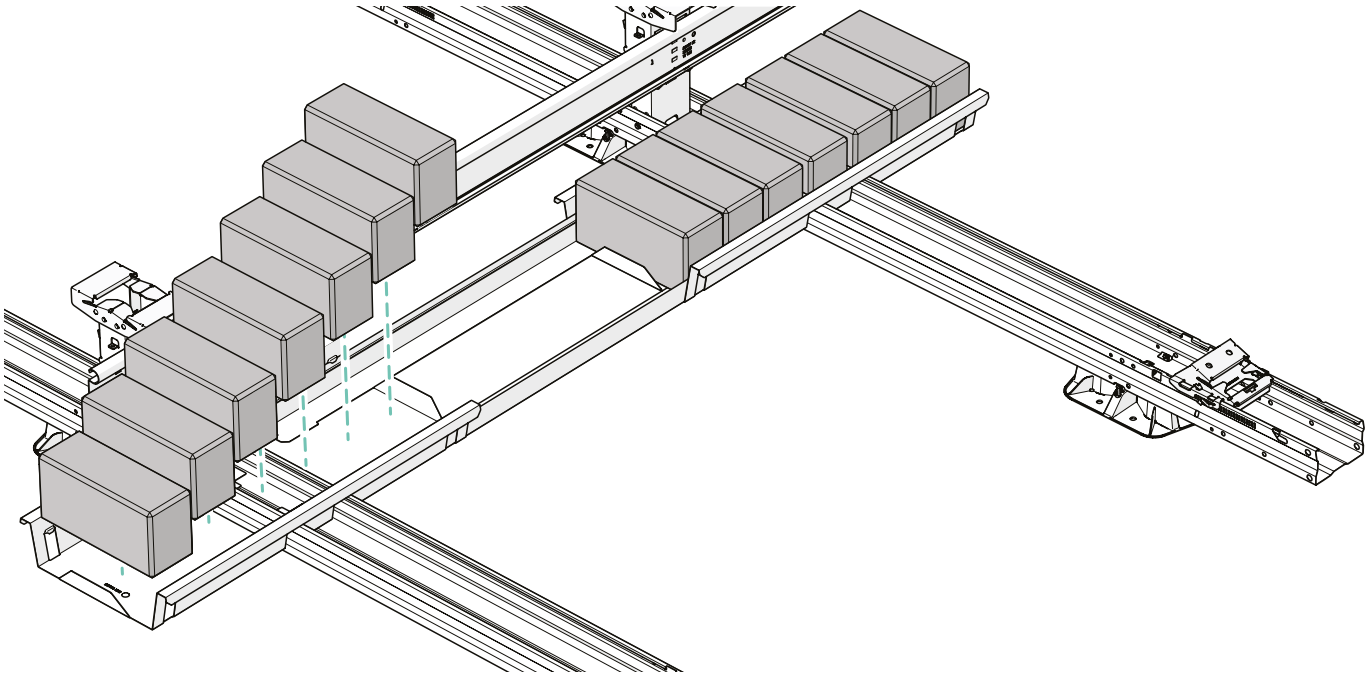

4 Fill the ballast tray extenderwith bricks.

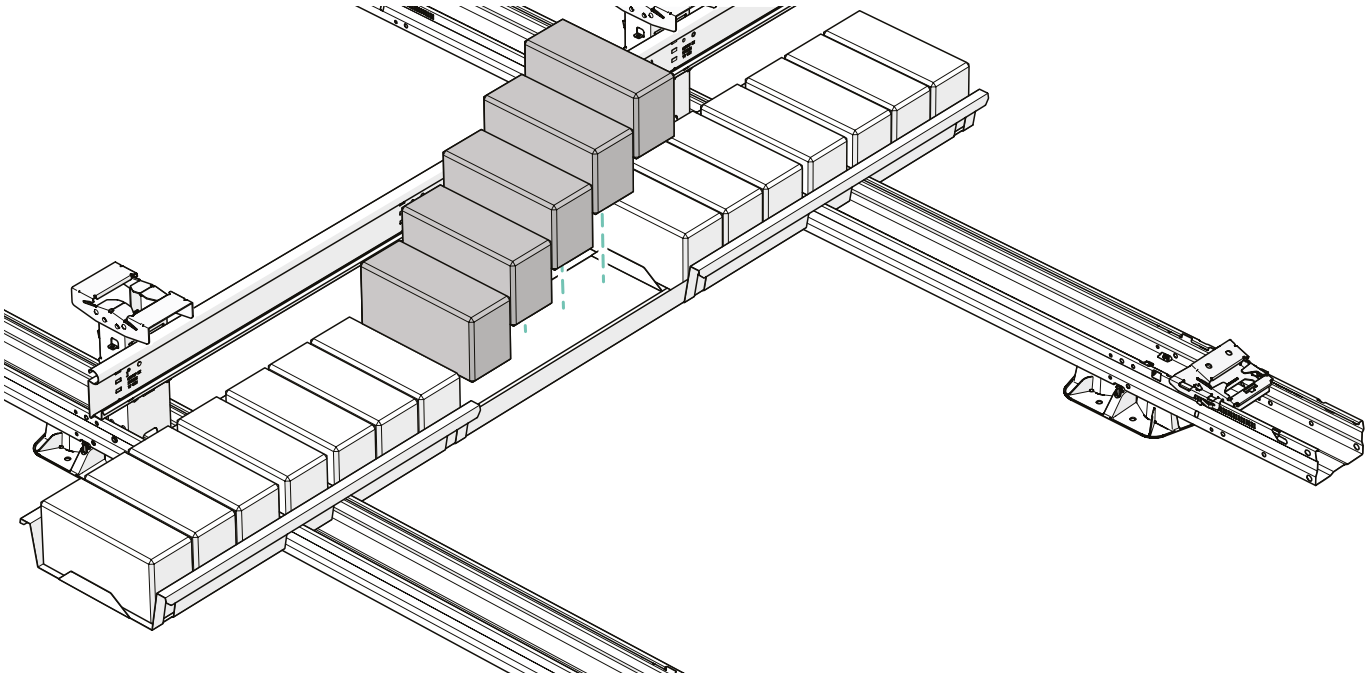

5 If the project plan specifies more than one ballast tray, slide the outer ballast tray against the tabs in the unit. In this array you can place a maximum of three ballast trays in a row.

Place the bricks in the outer ballast tray on the flat side, otherwise they will not fit under the solar panel.

Follow the project plan for the required positions and quantities of ballast.

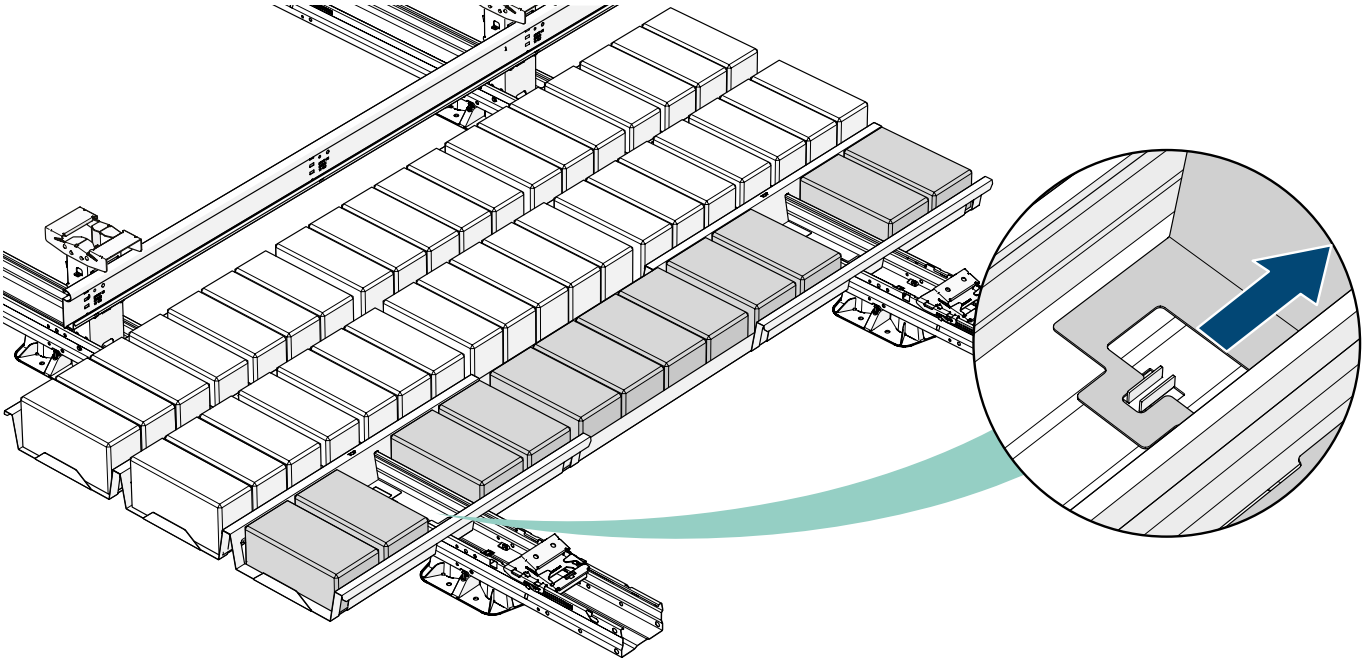

Position E In perimeter ballast brackets

1 Squeeze the hooks of the perimeter ballast bracket and insert the bracket into the end of the unit.

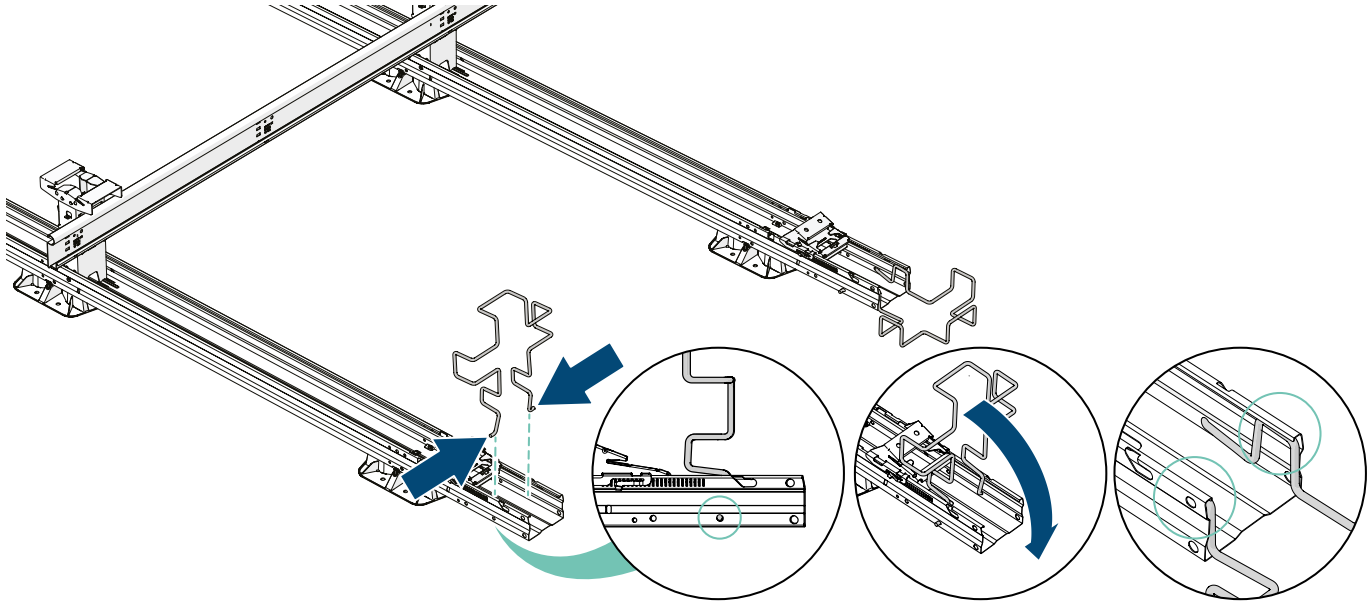

2 Always fill the perimeter ballast bracket with two bricks.

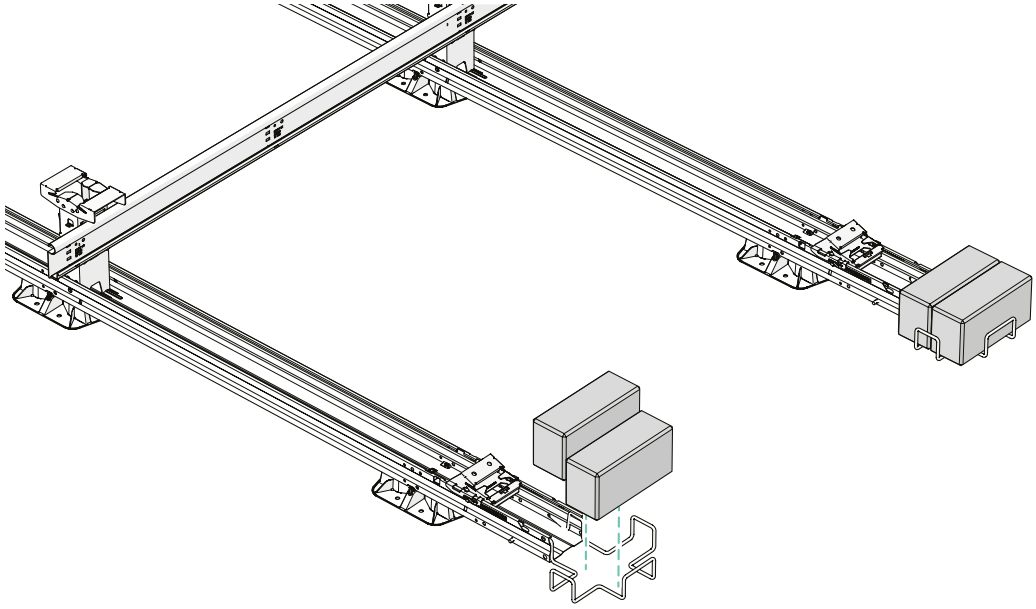

5. Lightning protection

If both a lightning protection system and a PV system are installed on a roof, several considerations need to be taken into account.

If a lightning protection system is installed or is present on a building, a separation distance (S) must be maintained between the metal parts and the cabling of the PV system, on the one hand, and the lightning protection system, on the other (requirement EN-IEC 62305 series). As a rule of thumb the following separation can be applied: 0.5 m. The correct distance can be calculated using the formulas in the EN-IEC 62305-3 series.

See Annex : Lightning protection for more information.

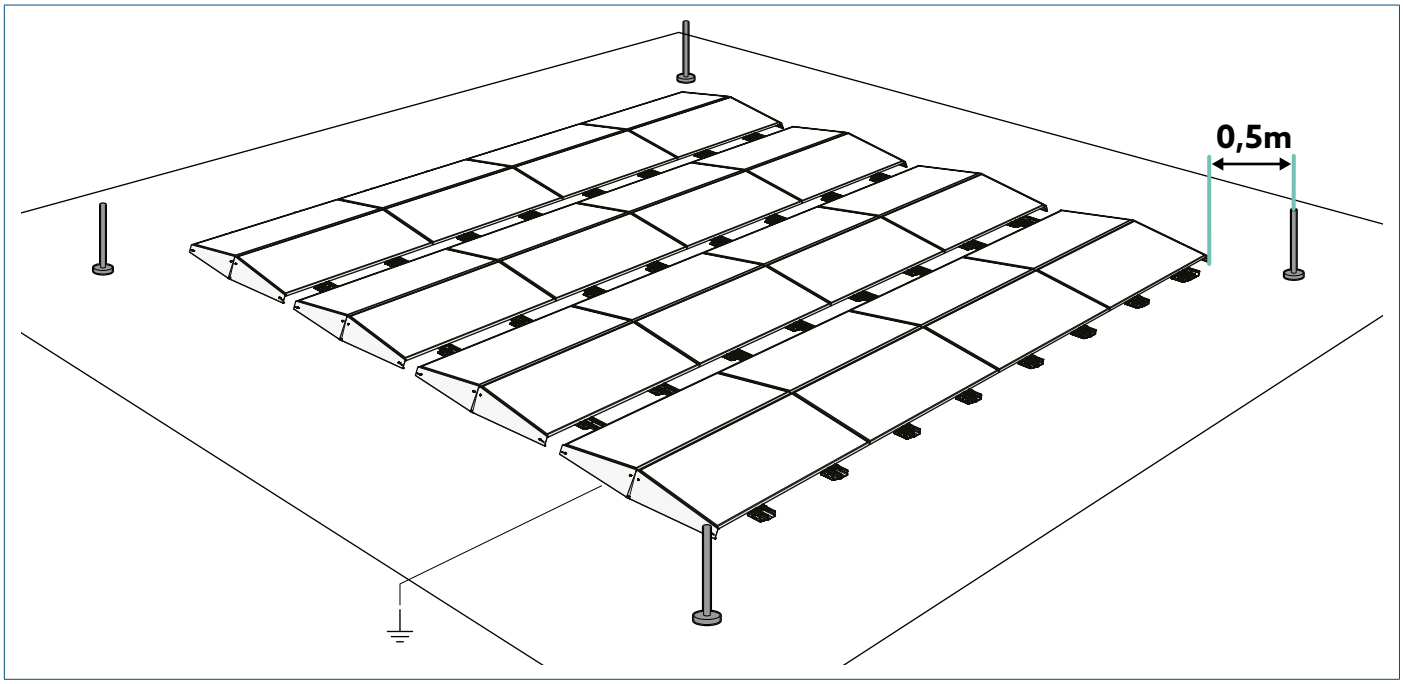

The lightning protection system is usually equipped with arrestors, which ensure that lightning cannot strike the PV system.

Is it impossible to maintain the required separation distance or is it specified that the PV system must be integrated into the lightning system? Then combine the PV system with the lightning protection system in accordance with EN-IEC 62305. Aid: use the decision tree on page. 28 and annex Lightning protection from page 31.

The CPX Wave mounting system has been tested and approved for use in accordance with EN-IEC 62305. The lightning current carrying capacity has been tested according to EN 62561-1 and complies with test class N (50kA, 25 As, 0.63MA^{2}s). Annex C of this manual indicates what and how such an installation can be created.

Consult your lightning protection specialist beforehand to analyse your project and to avoid unwanted safety issues. CPX is in no way responsible for the installation and/or connection of the lightning protection on the roof. Get expert advice from your specialist and ensure that a safe installation can be guaranteed according to EN-IEC 62305 and HD-IEC 60364.

6. Mounting the first solar panel

Do not mount any solar panels if there may be strong winds in the time between mounting the solar panel and wind deflectors. Immediately mount the wind deflectors after mounting a field of solar panels.

1 Place the solar panel upright on two high bases and align the solar panel in the middle.

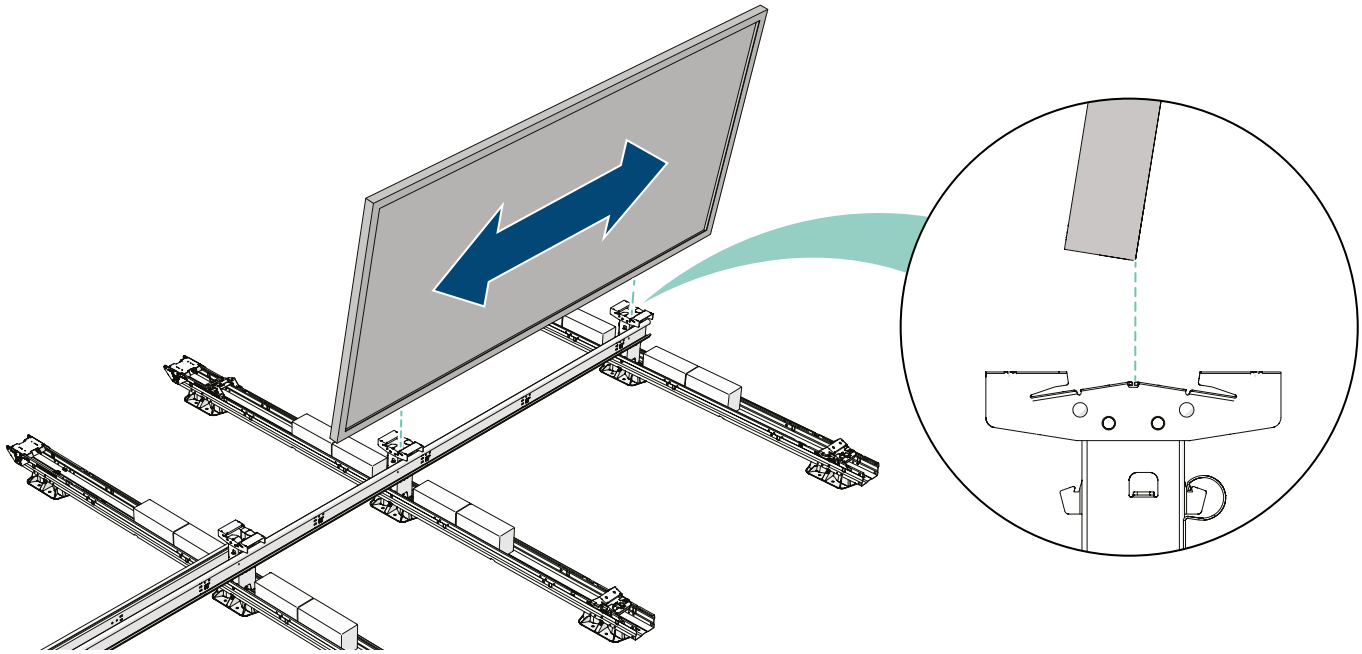

2 Carefully tilt the solar panel on the panel clamps.

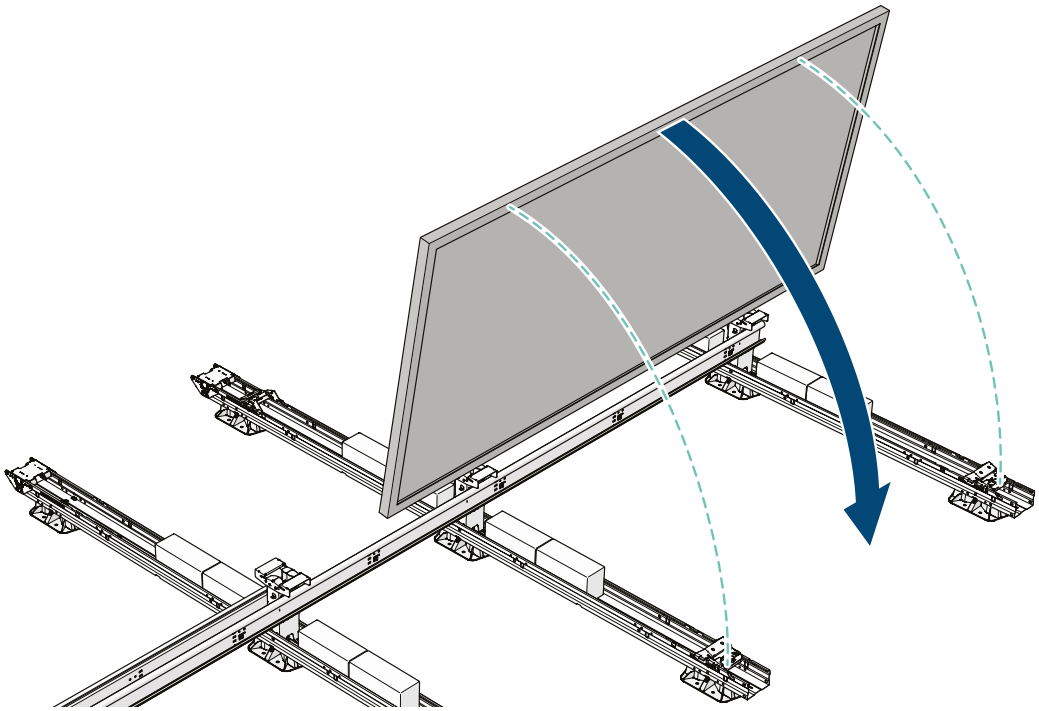

3 Pull the solar panel towards you so that the solar panel frame hooks into the high bases.

The solar panel should now rest on the lower section of the panel clamp. If the solar panel frame rests on the top part of the panel clamp, push the panel clamp backwards using the unlock tool. See Appendix for more information.

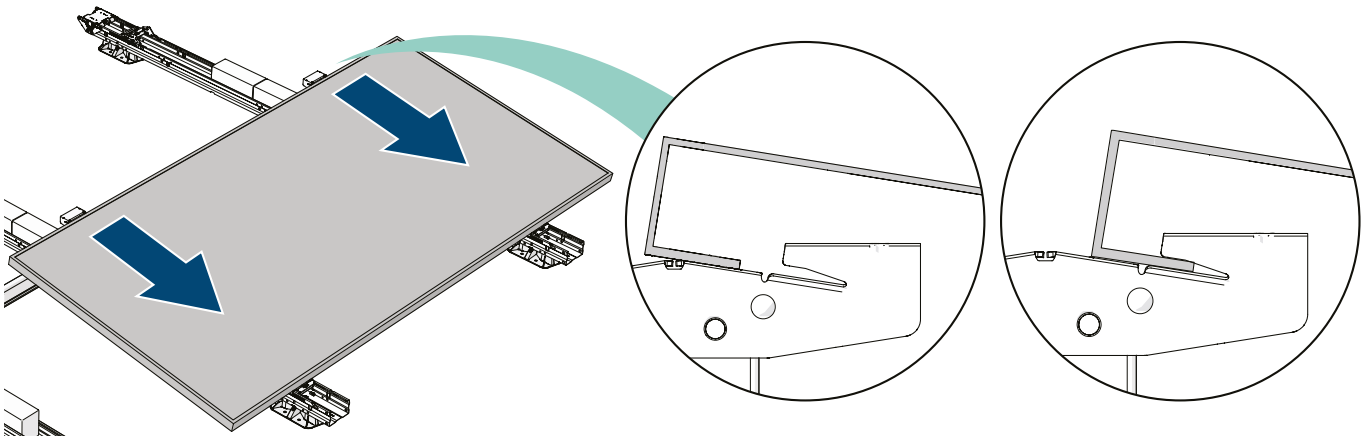

4 Pull the panel clamp towards you until they can go no further, so the panel clamps hook into the frame of the solar panel.

5 Pull the locking mechanism up through the clamp handle until it clicks into place to lock the solar panel in place.

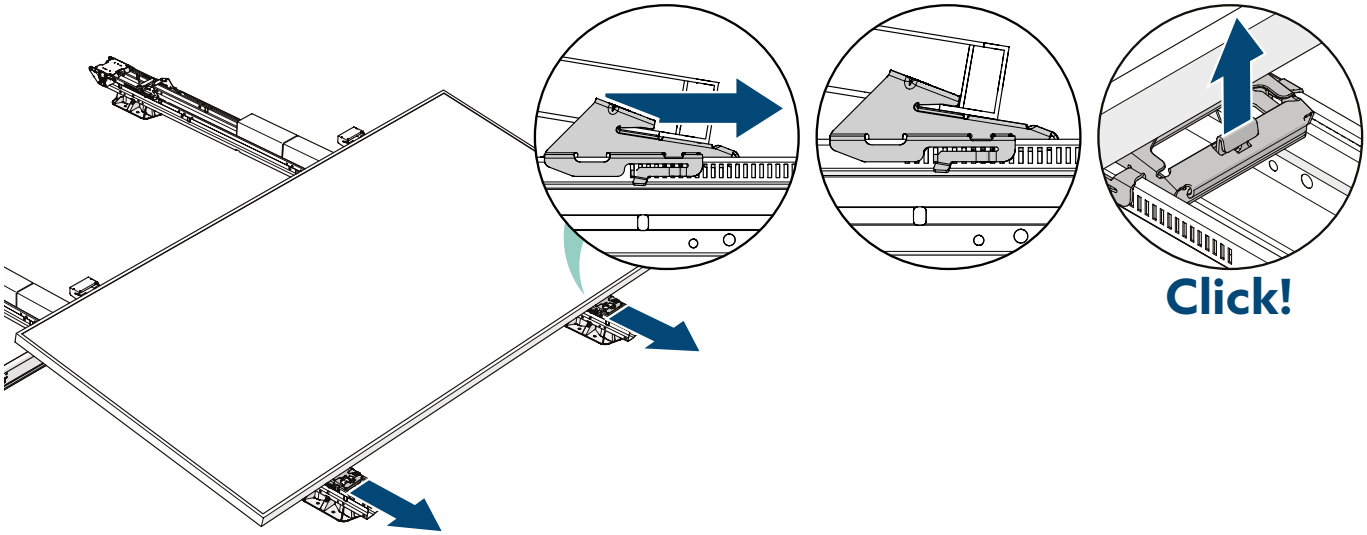

7. Mounting the following solar panels

1 Place the spacer tool on the installed solar panel.

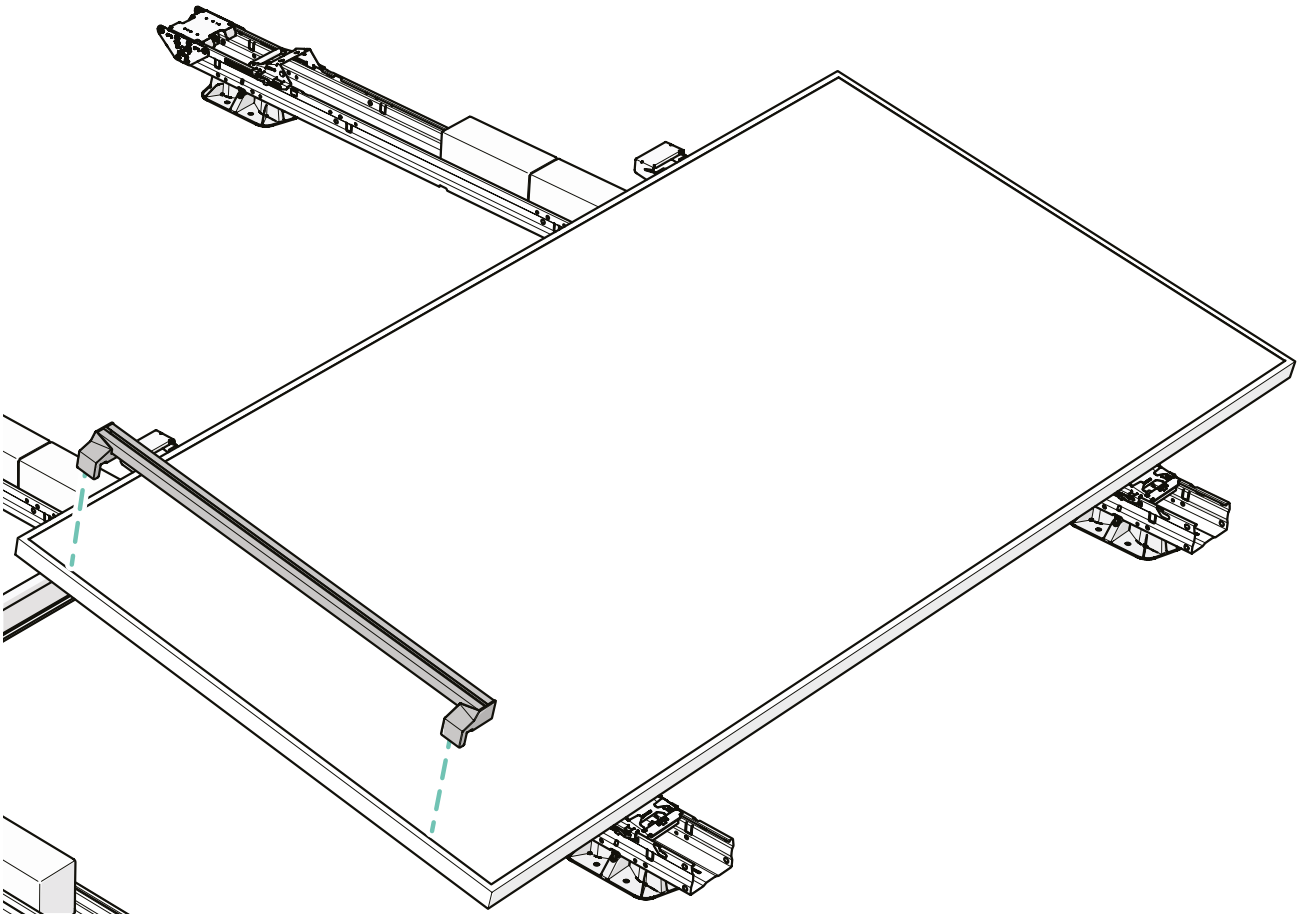

2 Place the solar panel upright on two high bases and align the solar panel in the middle.

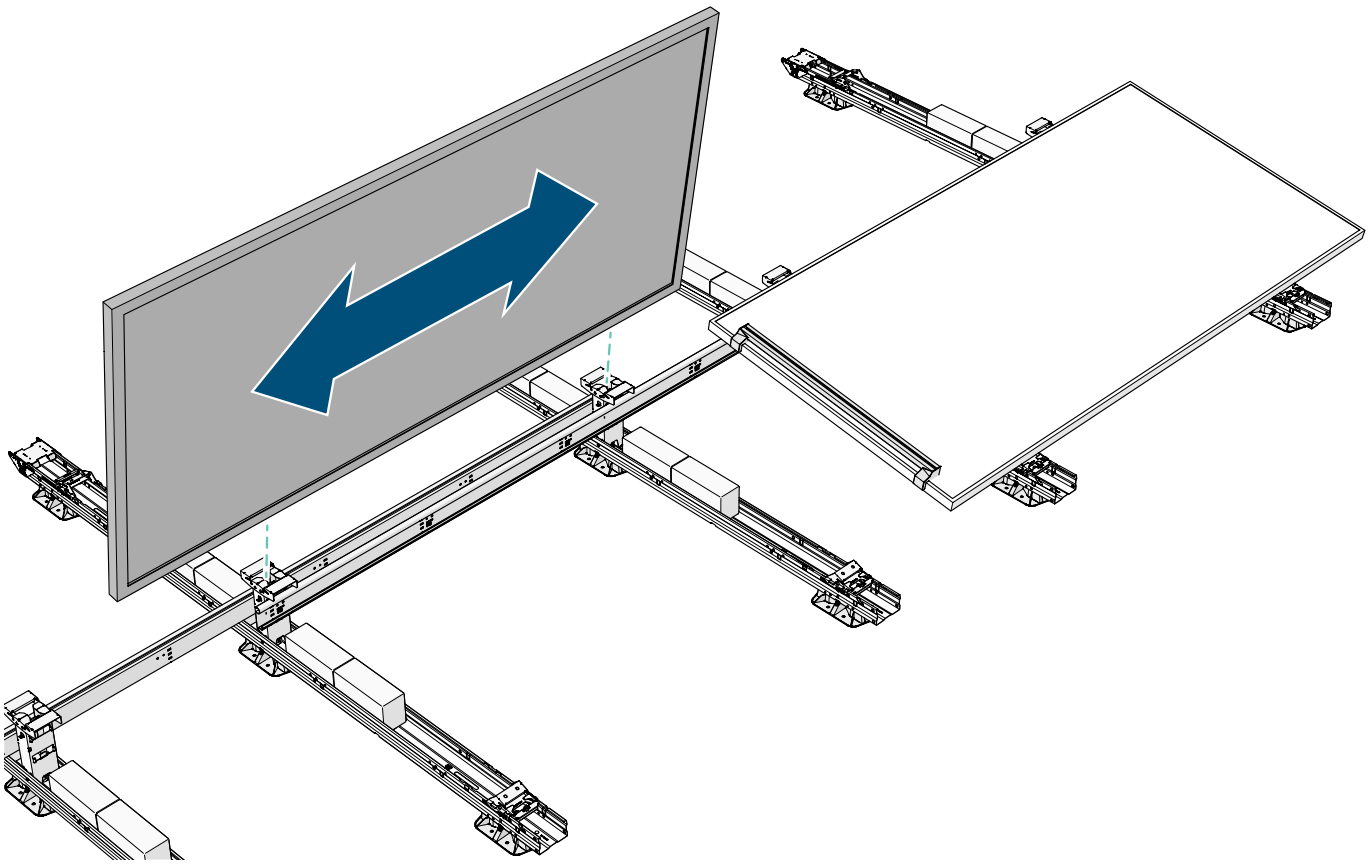

3 Carefully tilt the solar panel on the panel clamps.

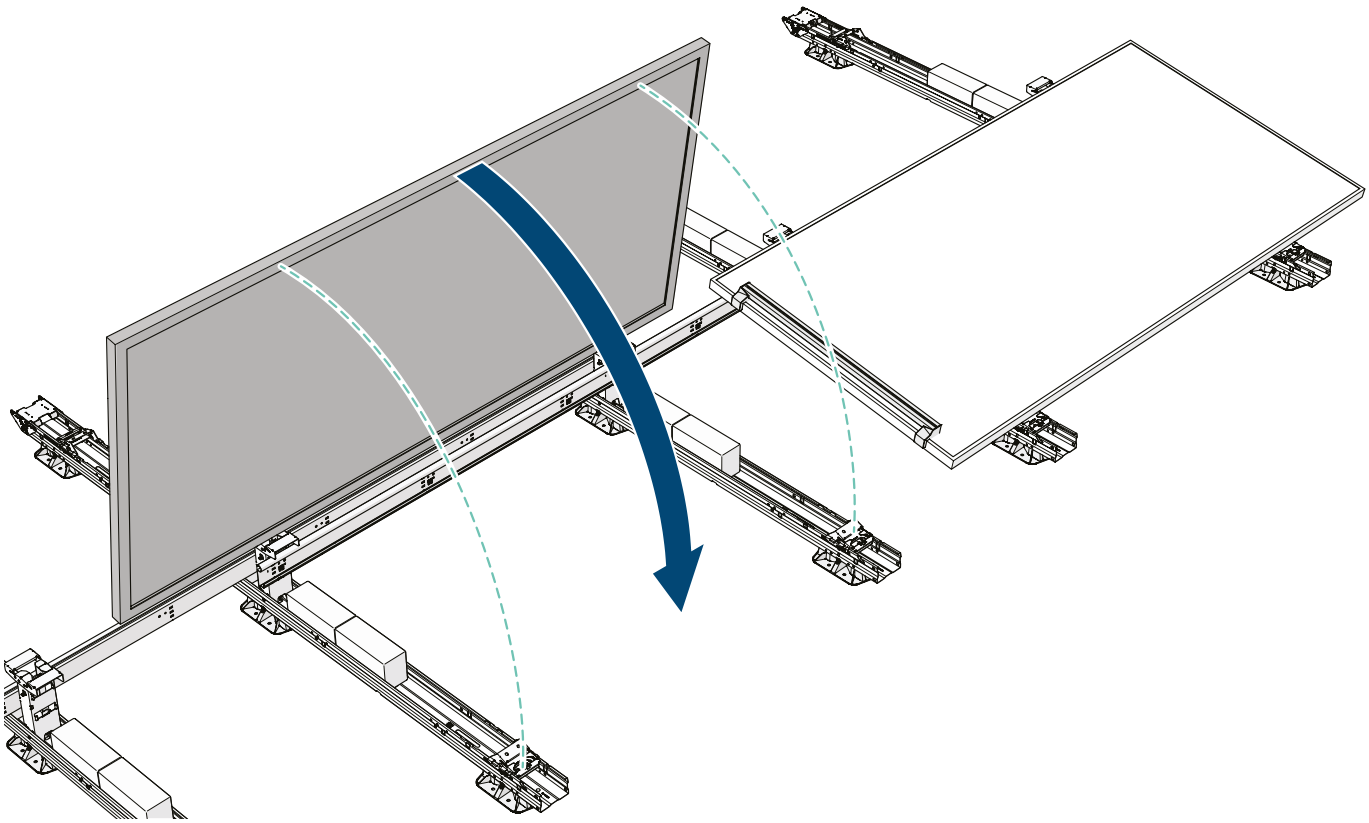

4 Slide the panel against the spacer tool

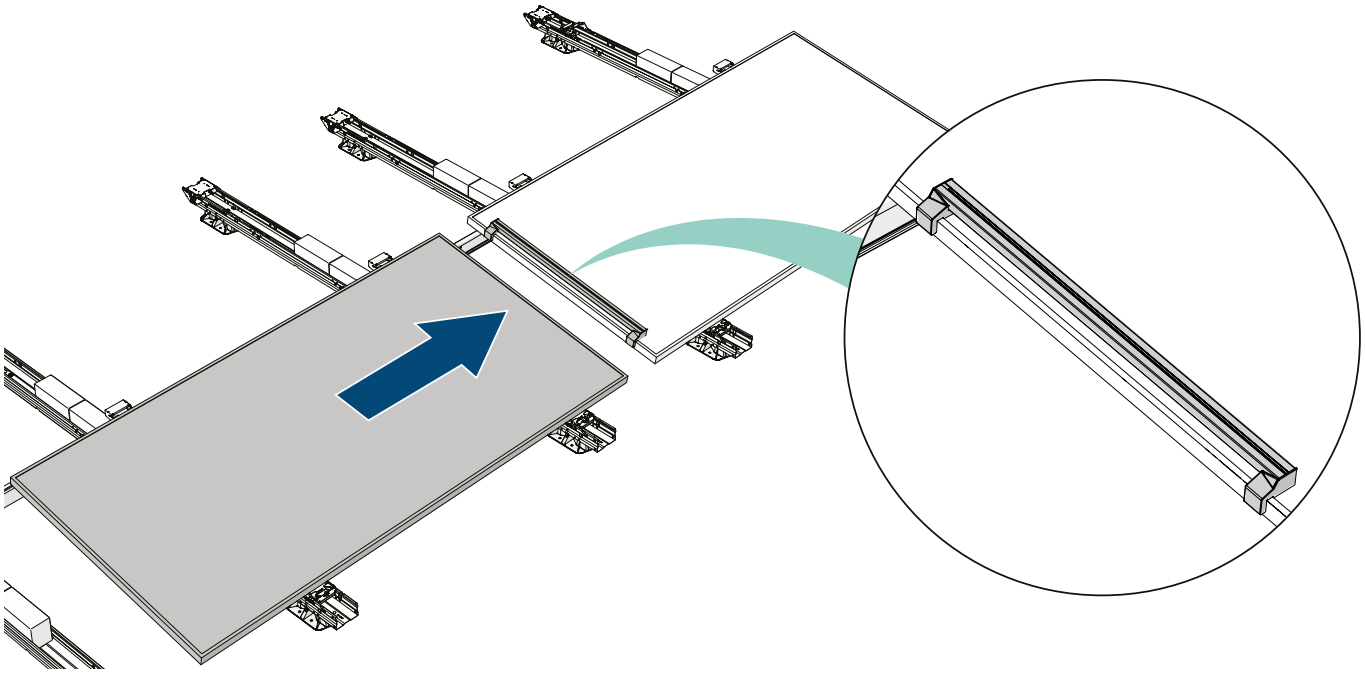

☐	Repeat step 6.3. Pull the solar panel towards you so that the solar panel frame hooks into the high bases.
☐	Repeat step 6.4. Pull the panel clamp towards you until they can go no further, so the panel clamps hook into the frame of the solar panel.
☐	Repeat step 6.5. Pull the locking mechanism up through the clamp handle until it clicks into place to lock the solar panel in place.
☐	Repeat the steps in this chapter for all panels.

8. Installing wind deflectors

1 If the last stabilizer is positioned on the left side of the high base, make sure that the solar panel extends at least 135 mm from the stabilizer. This spacing is necessary for the installation of the mid bracket of the wind deflector.

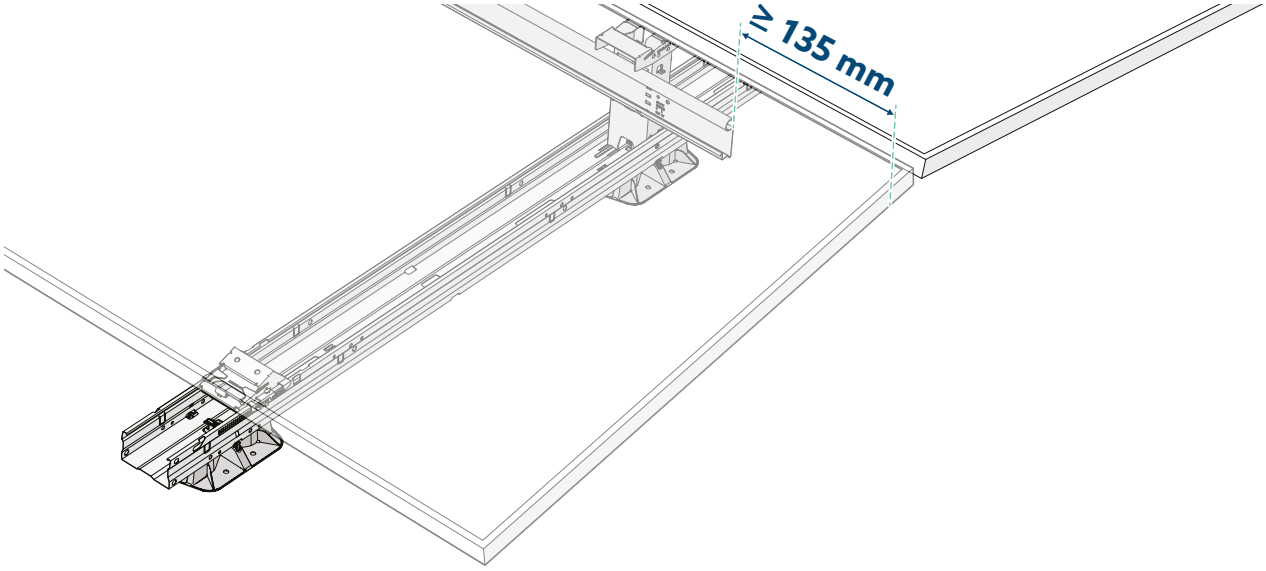

2 Place a side bracket on both sides of the right solar panel.
3 Place a side bracket on the left side of the left solar panel.
4 Align the side brackets to the corners of the solar panel frames.
5 Fasten the screws to secure the side brackets in place. Apply a torque of 6-10 Nm.

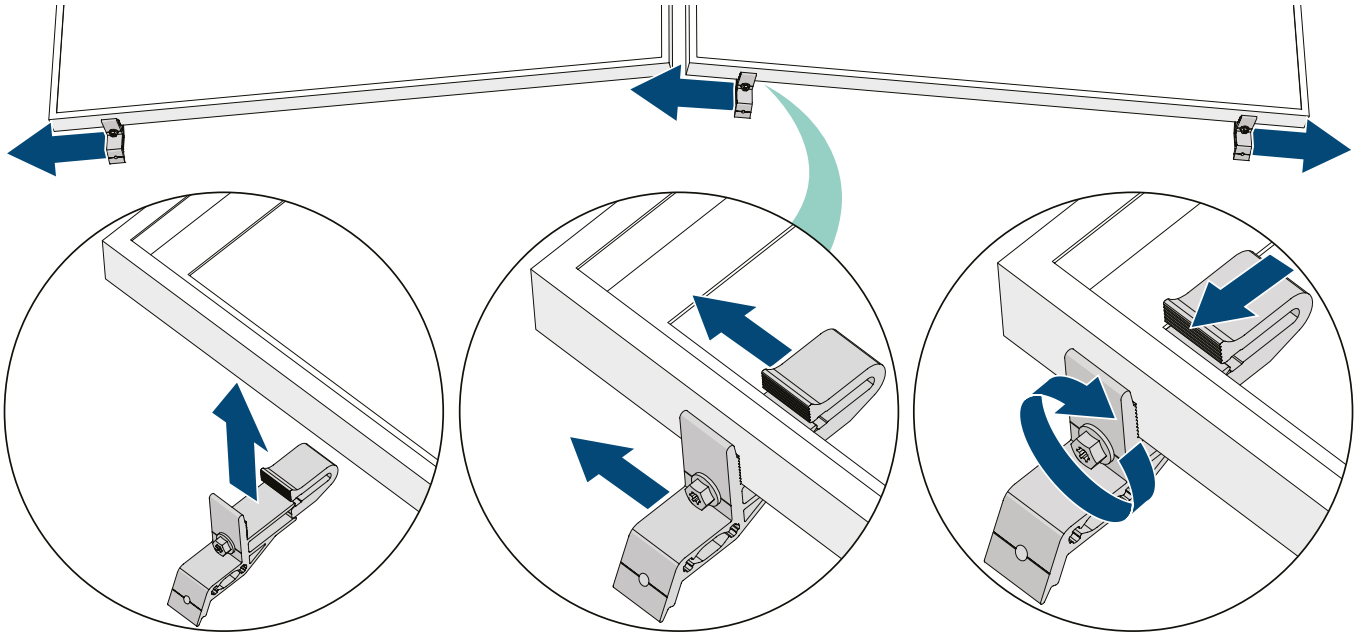

6 Hook the back of the mid bracket onto the rightside frame of the left solar panel.
7 Lift the front of the mid bracket against the solar panel frame.
8 Fasten the screw to secure the mid bracket in place. Apply a torque of 6-10 Nm.

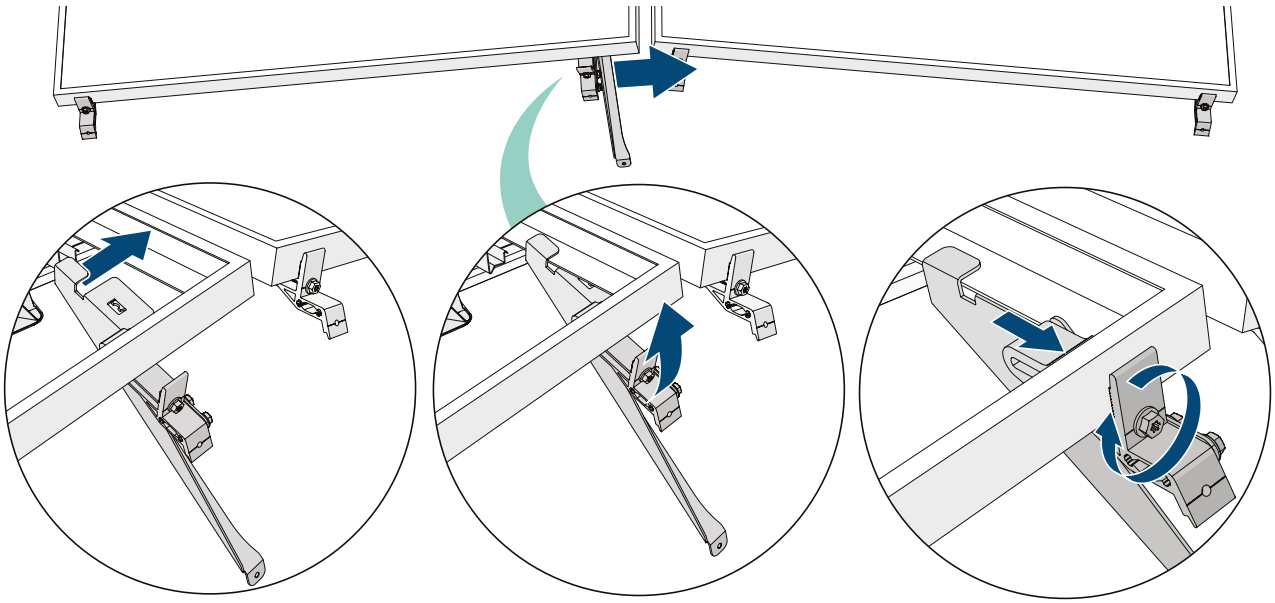

9 Hook the top flange of the wind deflectors between the deflector brackets and the solar panel frames.

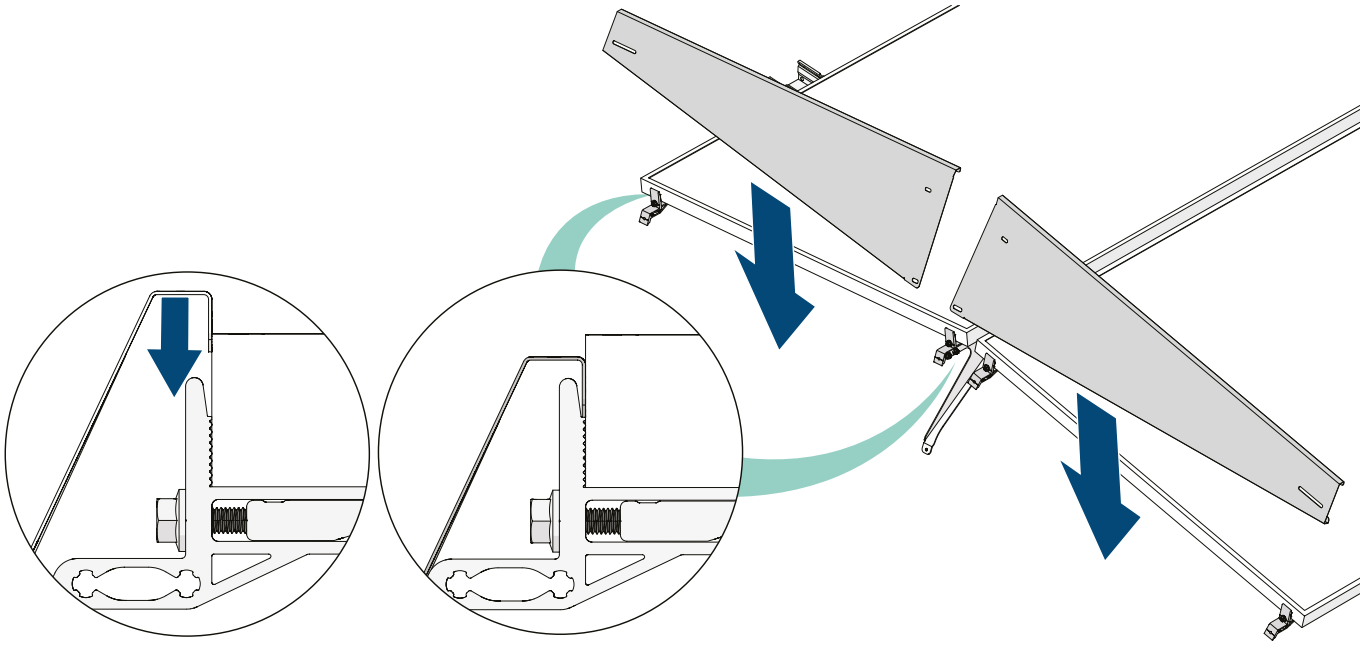

10 Slide the wind deflector panels to the centre. Make sure the panels overlap at the bottom and align with the screw holes in the deflector brackets.

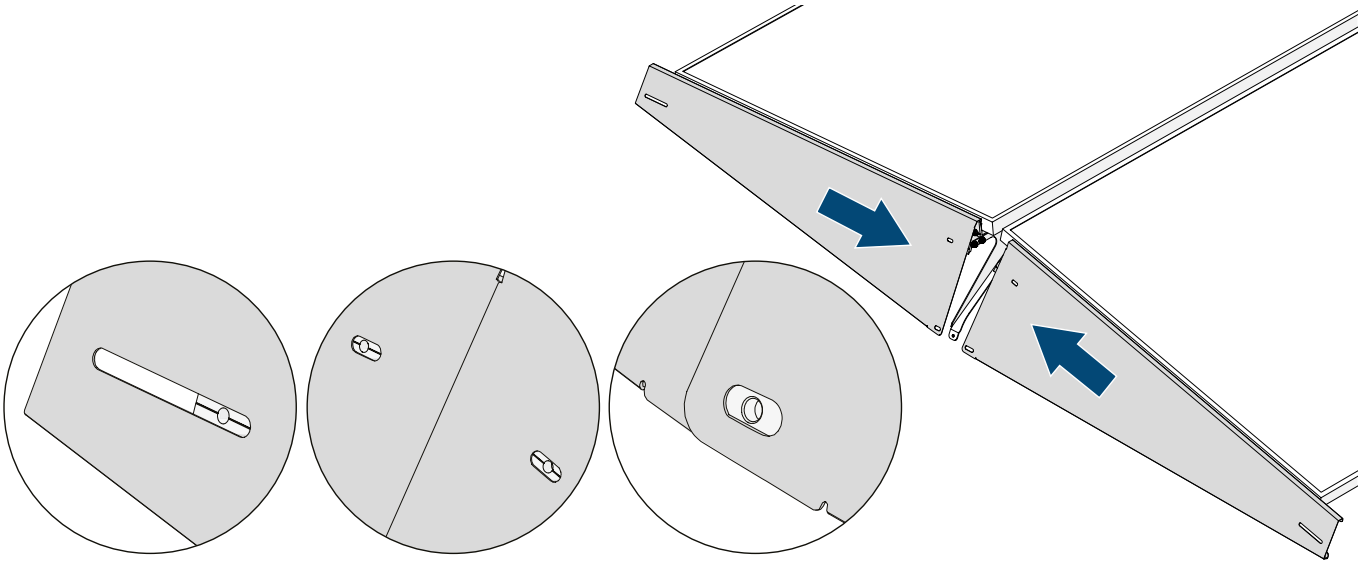

11 Screw the wind deflector panels to the deflector brackets using the 5 provided Torx screws. Apply a torque of 6-10 Nm.

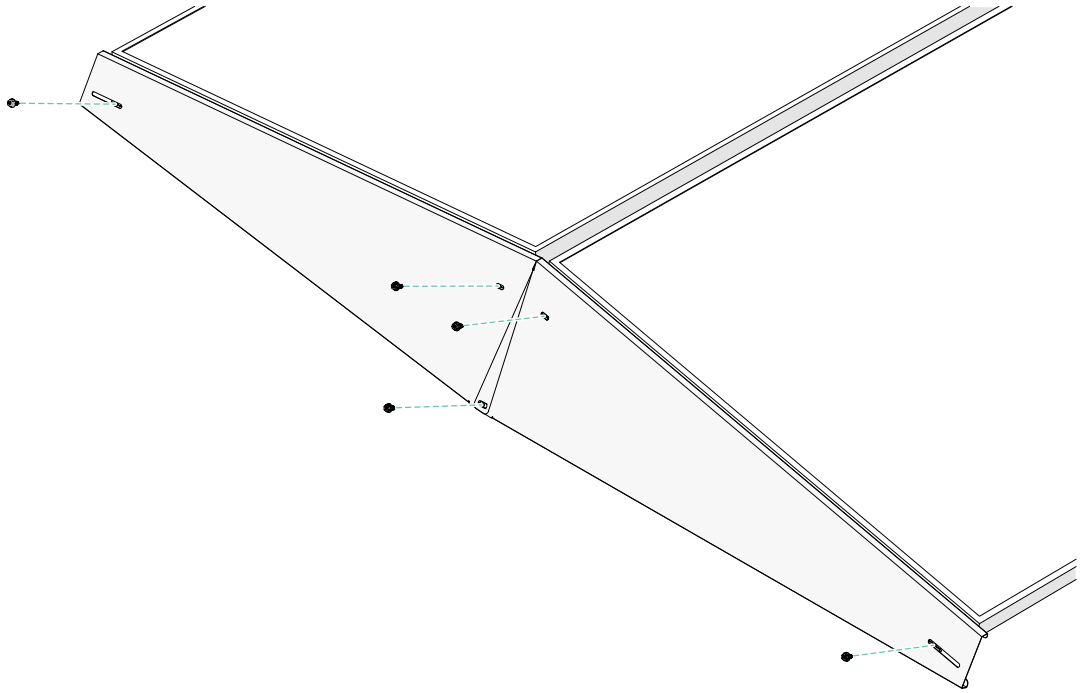

Repeat the steps in this chapter for all wind deflectors.

If the wind deflectors are properly inserted and aligned, there will be space between two wind deflectors. The wind deflectors are then correctly mounted.

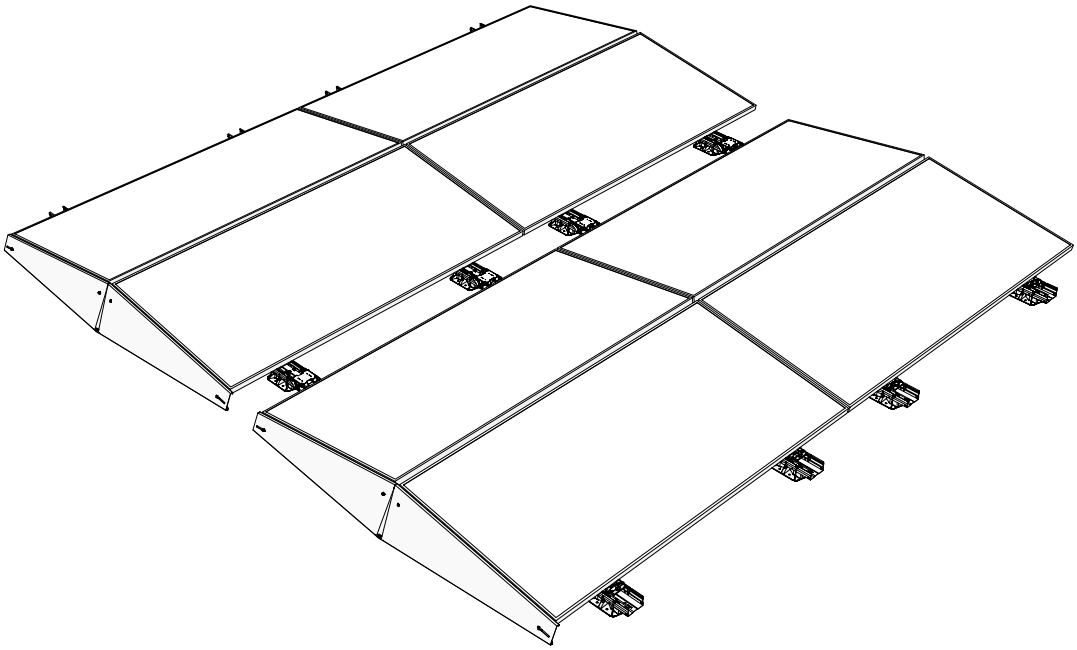

Annexes

A. Cable management

Cable bracket positioning table

	Spacing ≤350 mm	Spacing >350 mm
	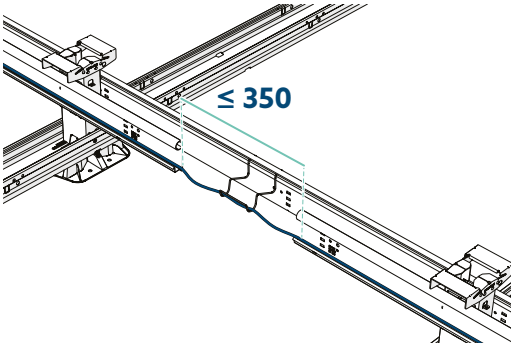	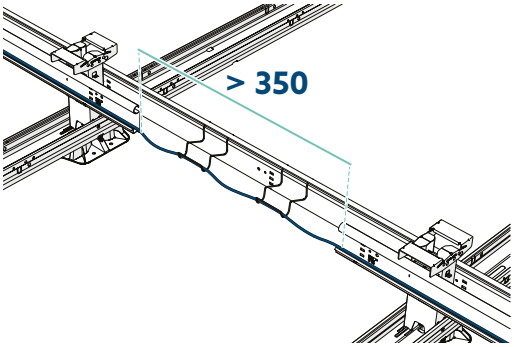
Number of cable brackets	1	2
Positioning of the cable bracket	in the middle between the two stabilizers	2× 10 cm next to the two stabilizers
Fixing of the cable	Cable ties	Cable ties

	End of a row without stabilizer	End of a row with stabilizer
	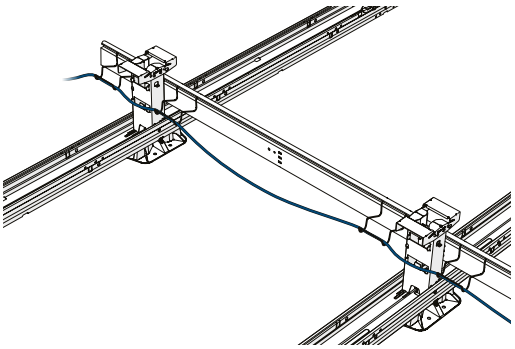	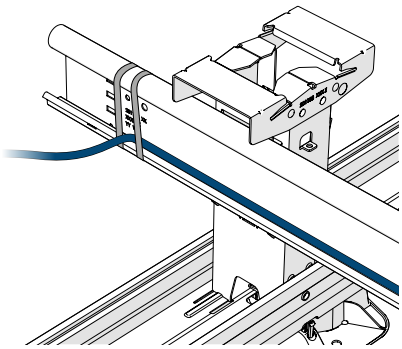
Number of cable brackets	3	0
Positioning of the cable bracket	1× 10 cm next to the end of the stabilizer 2× 5 cm next to the high base	! Do **not** lay the cable over the end of the stabilizers: sharp edges can damage the cable.
Fixing of the cable	Cable ties	Cable ties

B. Grounding, equipotential bonding and lightning protection

Method for grounding/equipotential bonding

Thanks to the integrated part bonding, no additional equipotential bonding between the metal parts is required:

1) Fully tightening the panel clamping ensures the correct contact of the panel frame with the high base
2) The cutting edge at the top of the uprights cut into the frame edge of the solar panels.
3) The cutting edge at the bottom of the high base elements cuts into the module frame of the solar panel.

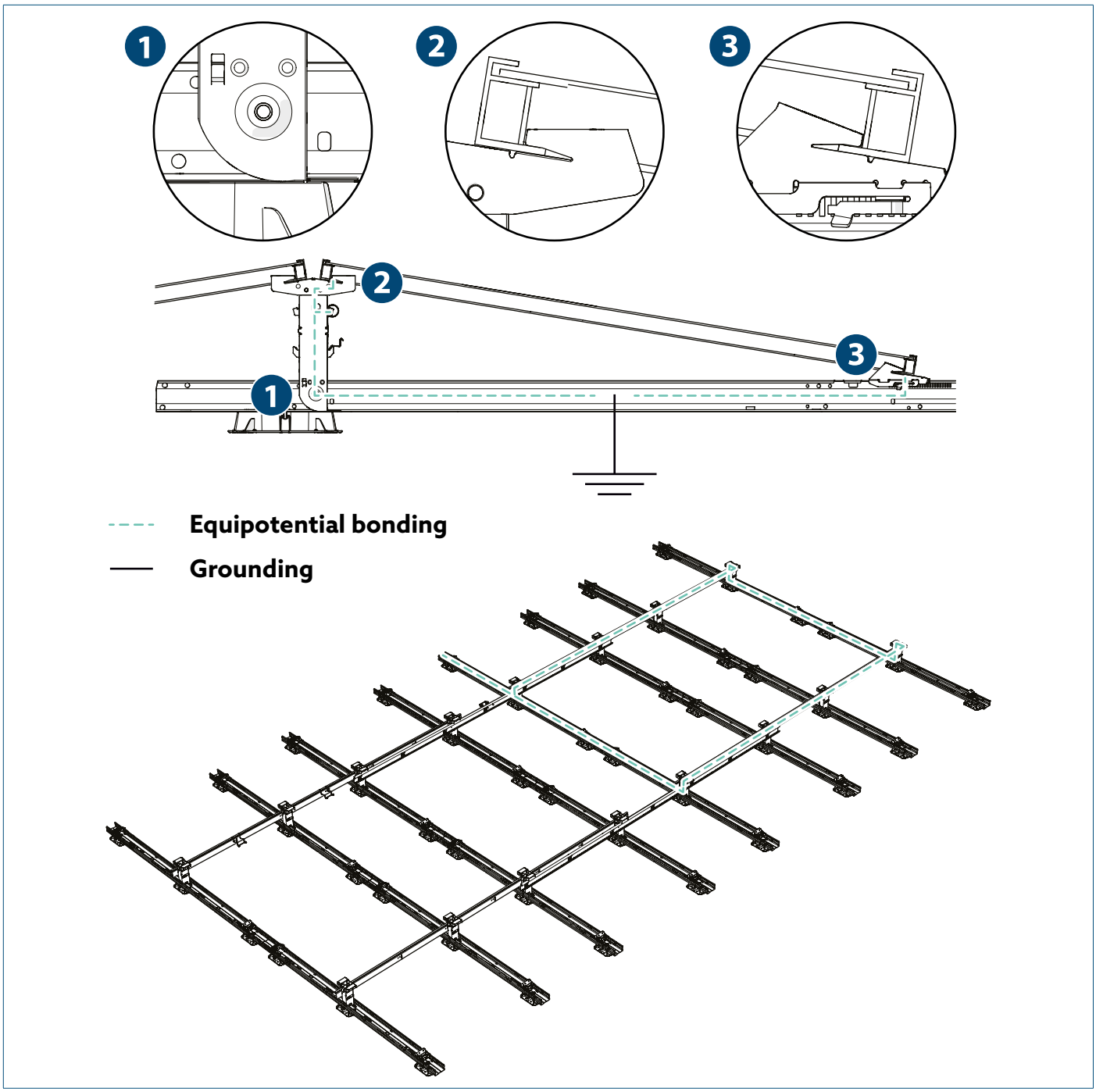

Installation of equipotential bonding conductor

- The earthing conductor (≥Ø 4mm²) runs parallel to the plus and min. conductors and is connected to a separate earthing point of the inverter.
- Each individual PV field will have its own bonding conductor.
- At least one unit in a field must be connected to an earth rail.
- The earthing cable can be fitted with a cable eye and screwed to the rail together with serrated spring washers.
- Correct installation: protected against corrosion and firmly assembled.

C. Lightning protection

Preferred method: Installation of lightning detection system with conductor spikes

Determine the safe separation distance (S in graphic below) according to NEN-EN-IEC 62305 (minimum 0.5 metres). Maintain this separation distance as a minimum between the solar panels field and lightning protection system (LPS).

In this way you keep the solar panel field separate from the existing LPS and prevent lightning current from being conducted into the field.

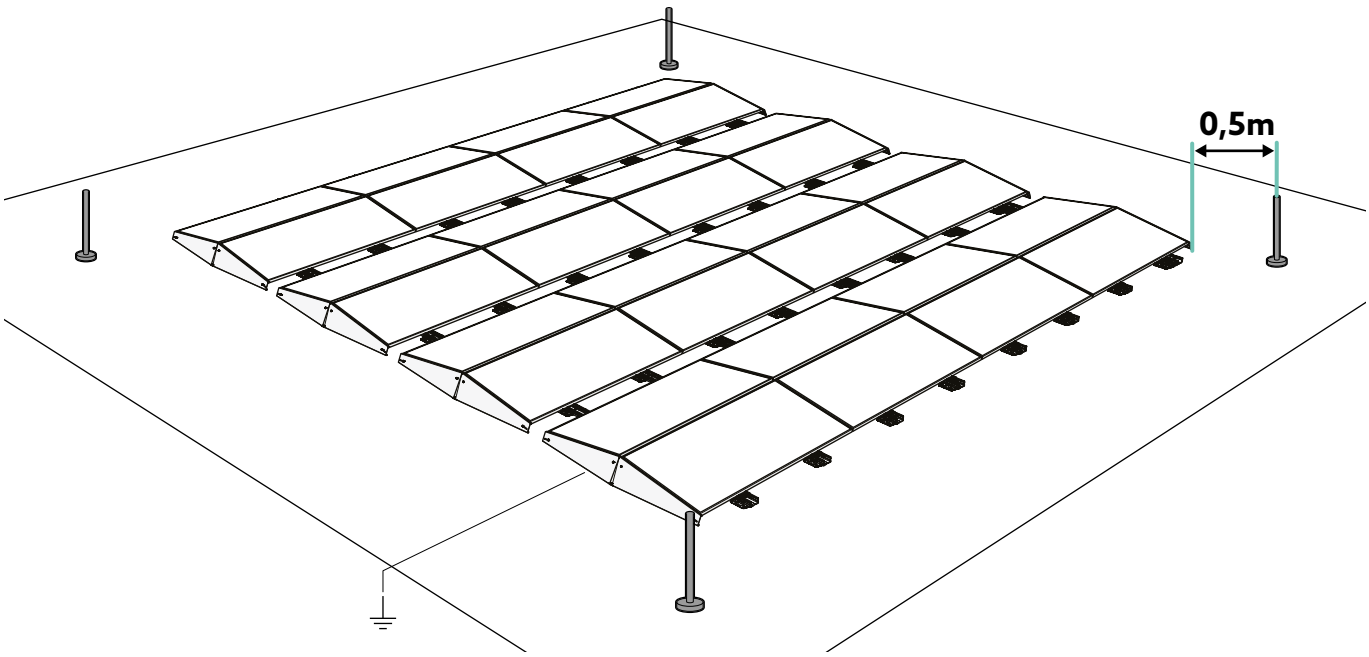

Alternative method: connecting the PV system to the LPS

If it is not possible to install the lightning protection, connect the PV system to the existing LPS of the building according to the applicable lightning protection level (LPL). The lightning protection level of the building is determined on the basis of the risk analysis in accordance with standard EN-IEC 62305-2. Please refer to the table below.

Mesh size	LPL level	Connect the PV system every
5 × 5 metre	I	5 metre
10 × 10 metre	II	10 metre
15 × 15 metre	III	15 metre
20 × 20 metre	IV	20 metre

A few points to note:

- Make sure that cable supports, ducts, etc. are grounded and connected to the lightning protection system.

Metal cable brackets also form part of the PV system.

- Use a round wire with a minimum cross section of Ø8mm (= 50mm^2) for the incoming and outgoing line to the lightning protection system.
- Check whether an additional type 1 or type 2 surge protector is required for the cable lines (according to standard EN-IEC 62304).
- Preferably lay the cabling of the PV system in separate metal earthed conduits over the entire route, from roof entry, via inverter to the main distributor. The conduit should preferably be grounded to the roof safety net of the lightning protection system, to the grounding point at the inverter and to the earth rail at the main distribution system.
- A earth wire must run along the cabling of the PV system, coupled to the roof protection grid of the lightning protection installation, coupled to the ground point at the inverter and coupled to the main earth rail of the main distribution system.
- Each individual PV installation must have an inlet and outlet to the lightning protection system at each corner of the field.

- To connect to the roof catch pipes, use a round aluminium or copper conductor (solid wire) with a minimum cross section of Ø8 mm (= 50 mm²).
- To reduce the contact resistance, each rail connector must be bridged. Use mounting tape as described below (tested and approved solution).

CPX is in no way responsible for the installation and/or connection of lightning protection on the roof. Get expert advice from your specialist and ensure that a safe installation can be guaranteed according to EN-IEC 62305 and HD-IEC 60364.

Preparation

1 Make sure all the required tools are at hand.			
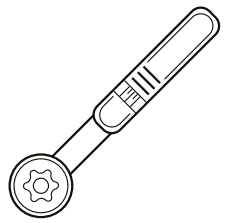	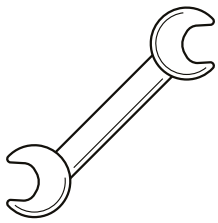	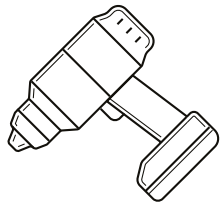	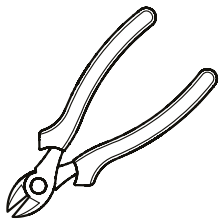
Torque wrench up to 20 Nm with hexagon bit size 13 mm	Open-end wrench size 13 mm	Cordless screwdriver	Metal cutting pliers

2 Requirements for the integration of CPX Wave in the LPS (not included)				
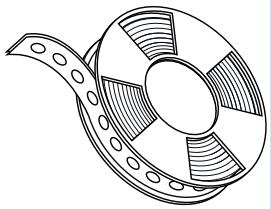	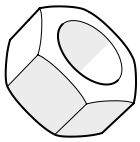	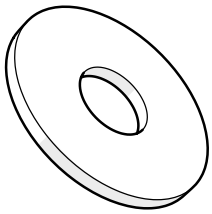	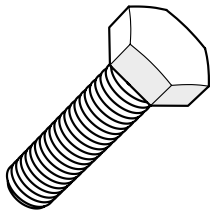	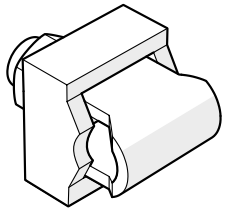
Mounting tape, heavily galvanised, 26 × 1mm	Hex. nut M8, DIN 934	Body ring M8, DIN 9021	Threaded bolt M8 × 30 mm, DIN 933	Dehn connector KSV 7.10

Get expert advice from your lightning protection specialist.

These items must be designed for use in a C4 environment and must be compatible with the CPX Wave items with Magnelis coating.

Installation

1 Attach mounting strap wherever two modules are joined with M8 bolts, body washers and nuts in the circled slots

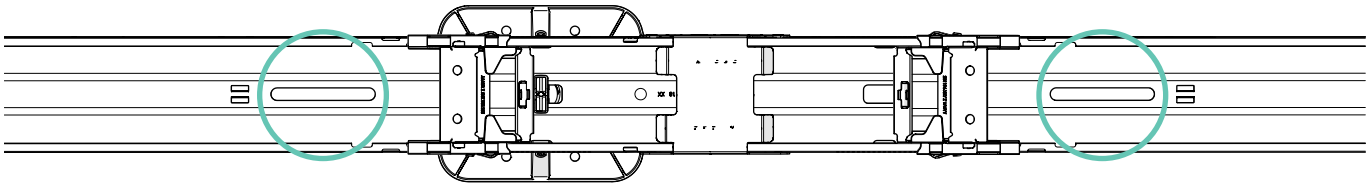

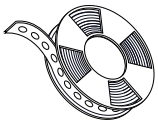

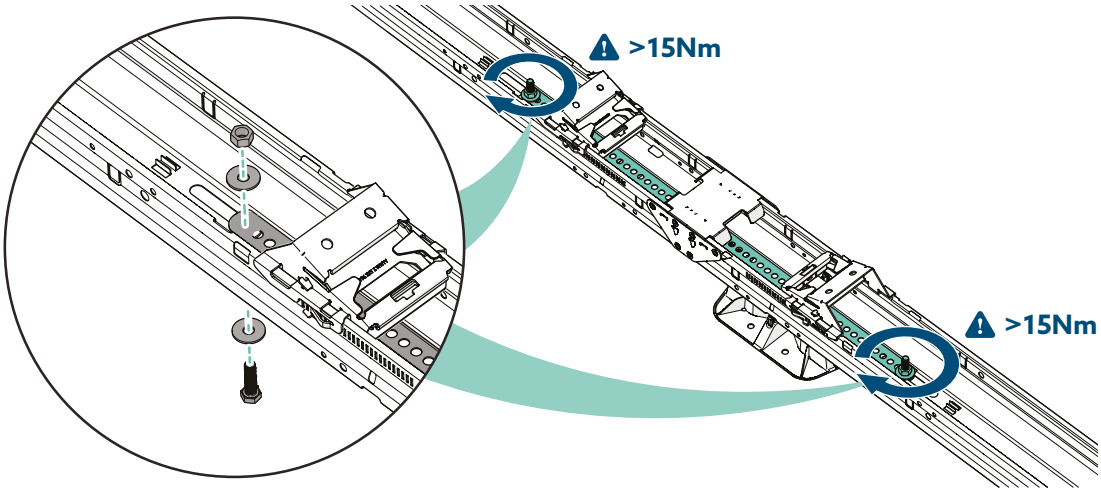

2 Connect all modules in the width direction of the (individual) field with each other with mounting band with M8 bolts, body washers and nuts

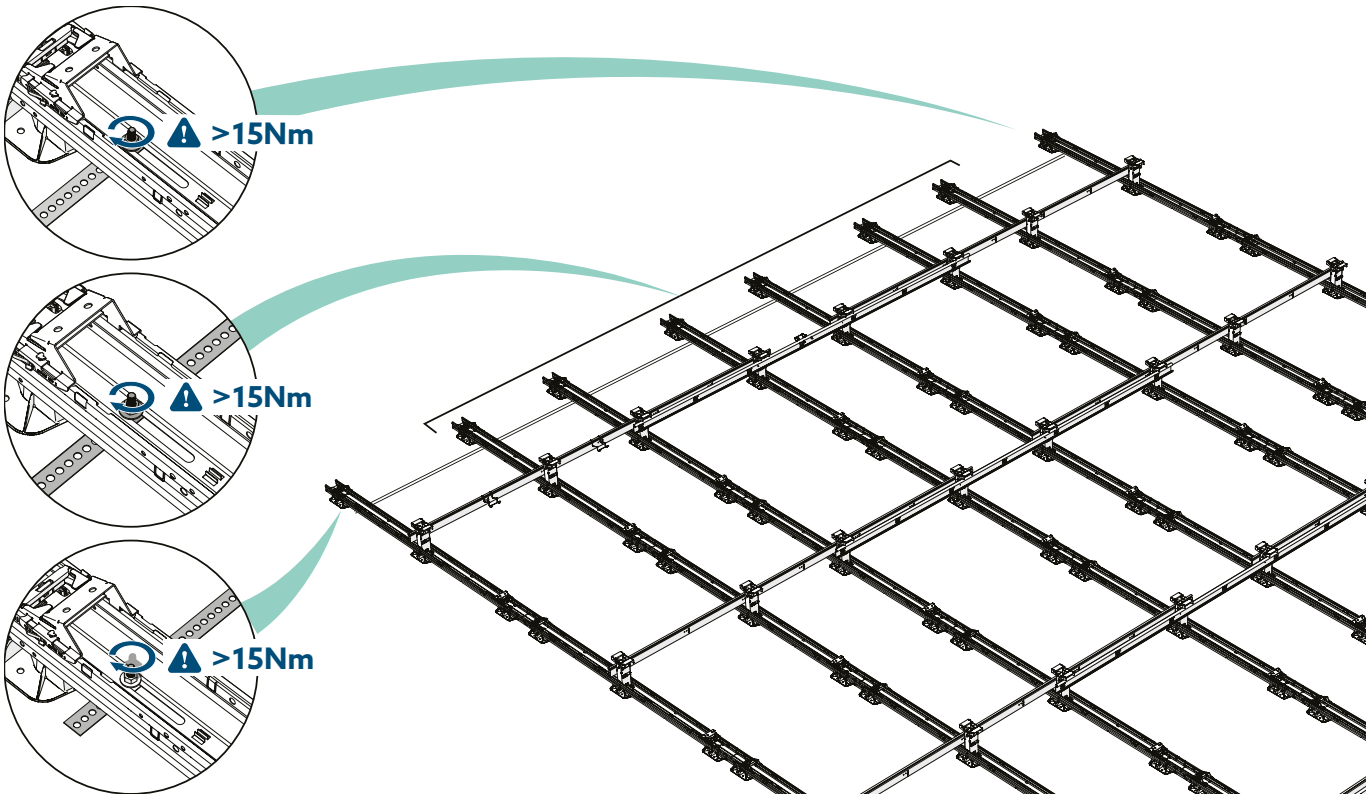

3 Drill ø10mm holes in the modules at all corners of the field for the connection to the roof trap and mount the four KSV 7.10 connectors

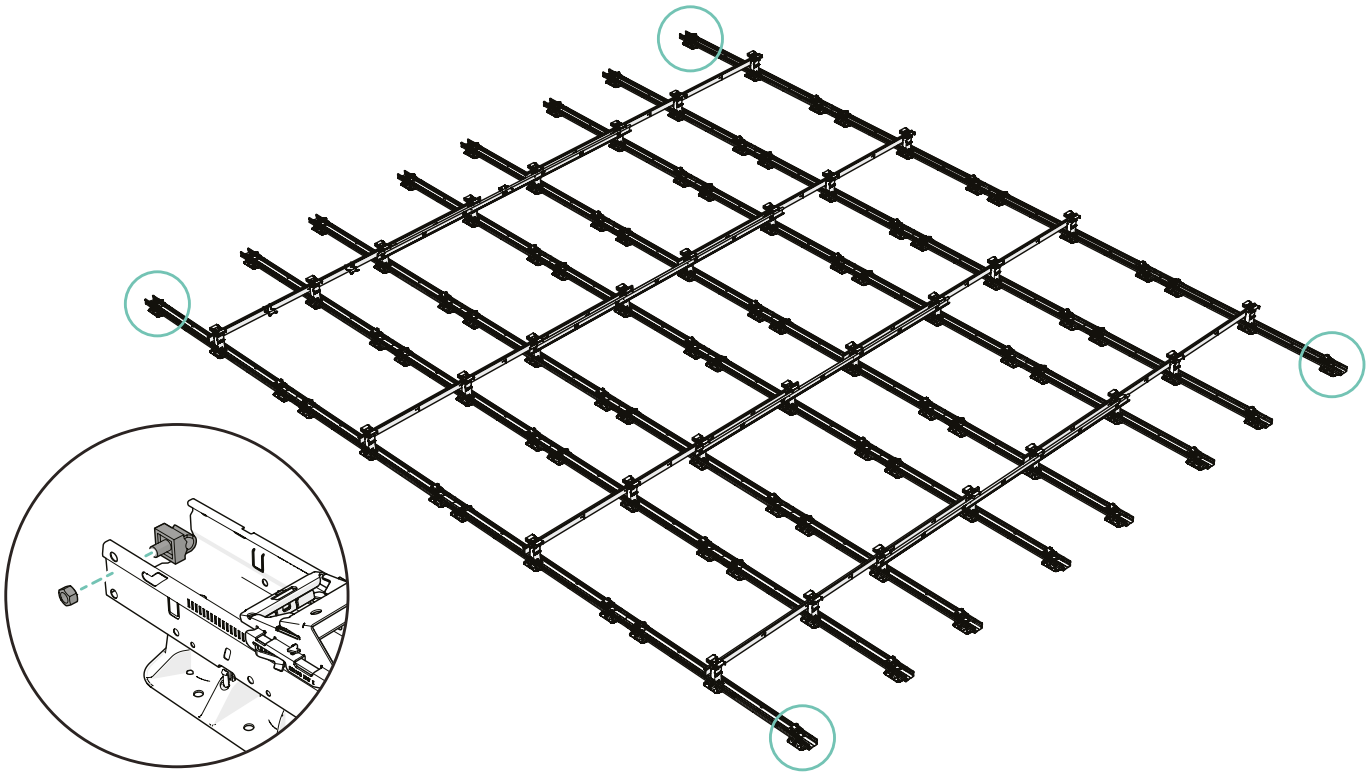

4 Attach an aluminium or copper conductor with a diameter of at least ø8mm to the four KSV 7.10 connectors. Attach the four conductor wires to the roof trap

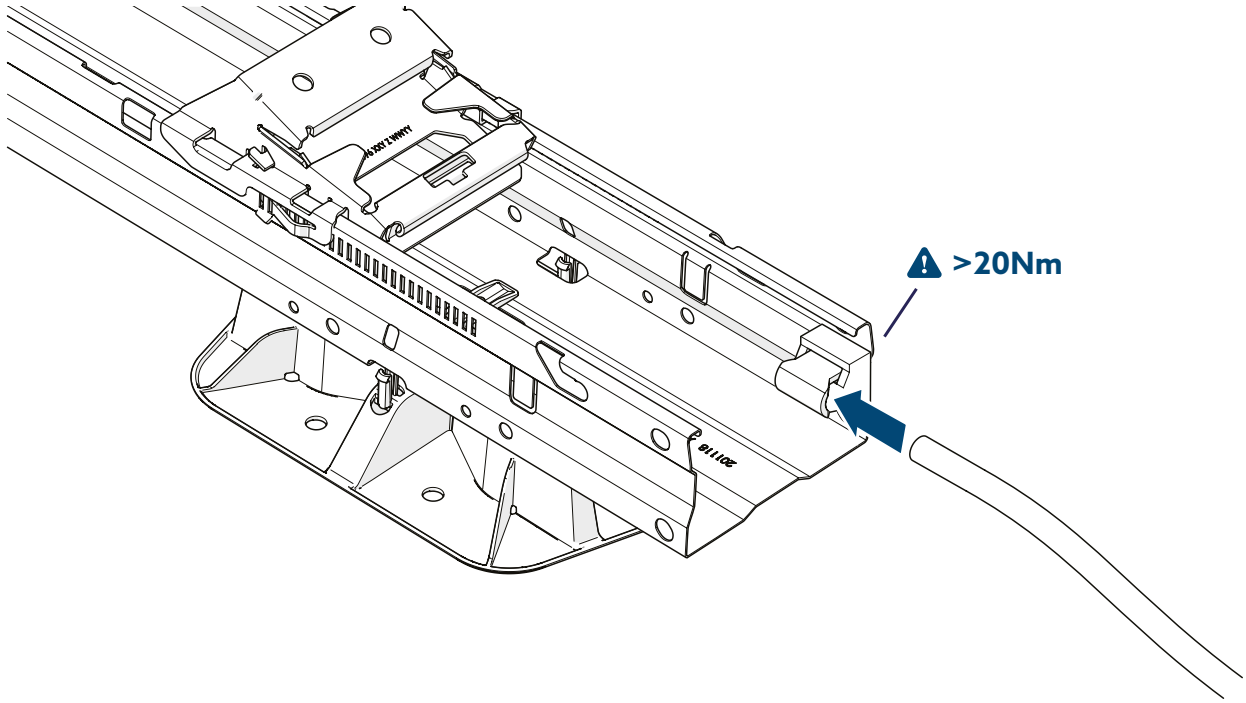

The connection of the PV system to the roof arresting lines of the lightning system can now be established. To do this, attach a round aluminium or copper conductor (solid wire) with a minimum cross section of Ø8mm (= 50mm²) for the incoming and outgoing line on the one side to the four KSV 7.10 connectors and on the other side to the roof catch pipes.

The CPX Wave mounting system has been tested and approved for use in accordance with EN-IEC 62305. The lightning current carrying capacity has been tested according to EN 62561-1 and complies with test class N (50kA, 25 As, 0.63MA²s).

D. Removal and recycling

General

Always follow local laws and regulations when dismantling the mounting system and disposing of it.

Removing coupler

5 Remove the coupler from the first row of units if it is in the way

Couplers can not be re-used after removal.

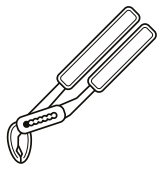

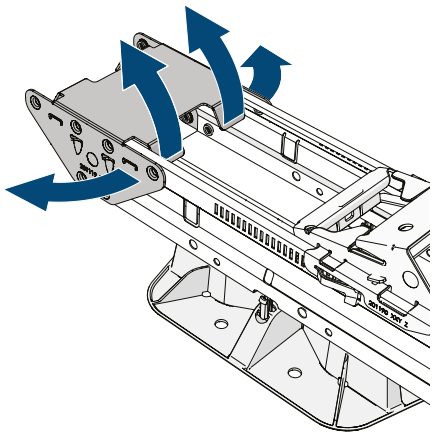

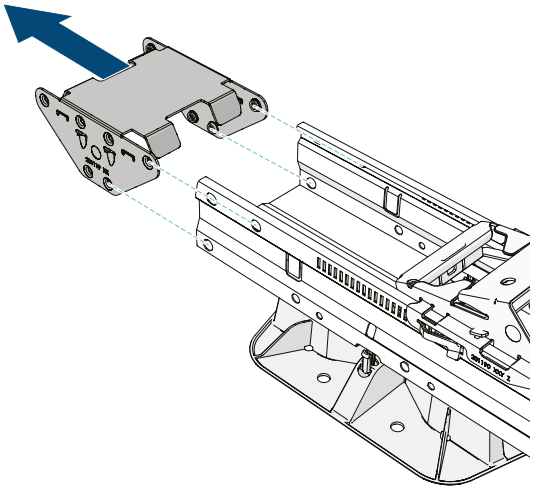

Removing a solar panel

1 Unlock the panel clamp using a small flathead screwdriver.
2 Slide the panel clamp back using the module unlock tool.
3 Lift the front of the solar panel 2 to 3 cm and push it back to slide the solar panel out of the high bases.

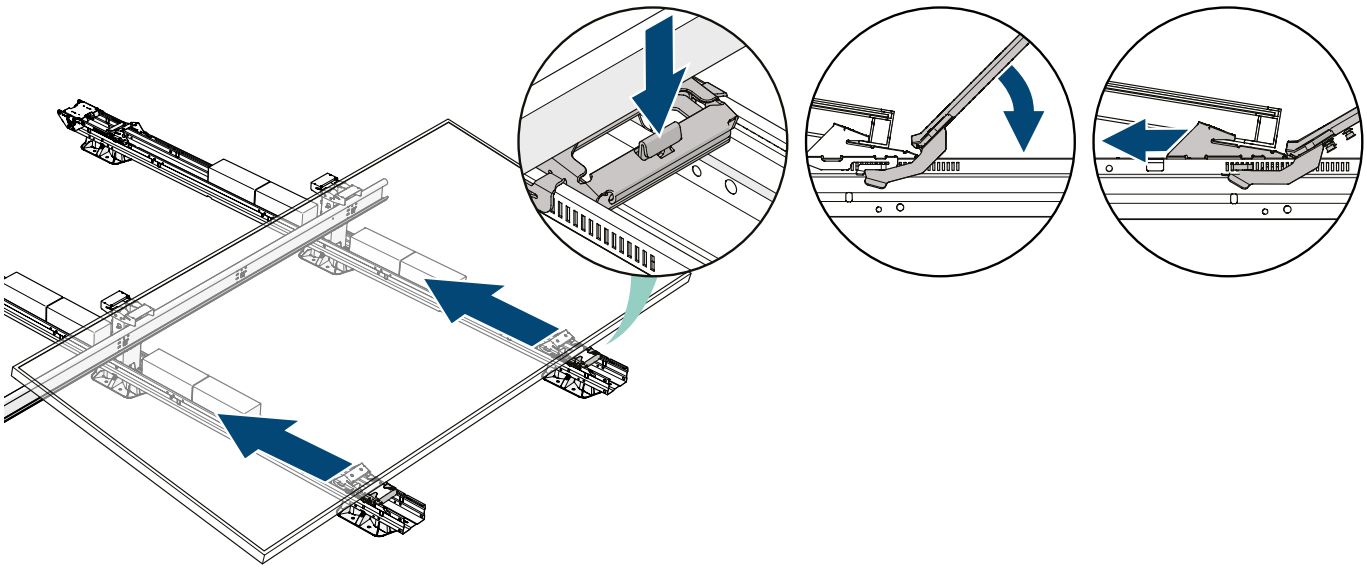

your foundation
for solar progress

www.cpx.eu

200923