ETHERMA°
INGENIOUS HEATING

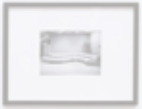

# eTOUCH-WIFI Thermostat Instructions

Easy touch Easy warm

**APP**

for eTOUCH-WIFI

# Table of Contents


01 Introduction..... 01

02 Technical Specifications..... 01

03 Installation..... 01

04 Wiring Instructions..... 02

05 Thermostat Symbols..... 03

06 Startup Wizard..... 04

07 WiFi Connection..... 05

08 Function and Operation..... 07

- 8.1 Temporary Override Temperature..... 07
- 8.2 Mode..... 07
- 8.3 Key-Lock..... 07
- 8.4 Menu..... 08
  - 8.4.1 Clock..... 09
  - 8.4.2 Event Setting..... 09
  - 8.4.3 Readout..... 10
  - 8.4.4 Advanced Setting..... 10
- 8.5 Open Window detection..... 12

09 Troubleshooting..... 13

10 Dimensions ..... 14

# INTRODUCTION

The eTouch-WIFI is an intuitive programmable thermostat used to control an electrical floor heating system or a water heating system. It will keep homes at comfortable temperatures whilst minimizing energy use. Install the app on your smart phone to control the heating system remotely with the WiFi thermostat .

# TECHNICAL SPECIFICATIONS

**Supply voltage:** 85-265Vac 50/60Hz

**Standby power:** ＜1W

**Max load:** 16A (electric heating) / 3A (water heating)

**IP class:** IP21

**Cable specification:** ≤2.5mm²

# INSTALLATION

**Step 1:**

Press your fingers under the side of the front part and pull toward you.

**Step 2:**

Connect the thermostat according to the wiring instruction.

**Step 3:**

Mount and reassemble the thermostat. Fasten the thermostat to a socket or an exterior wall box with screws, using the holes on each side of the thermostat.

**Step 4:**

Mount the frame. Click the display module back in place

# WIRING INSTRUCTIONS

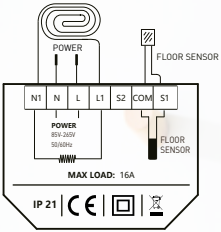


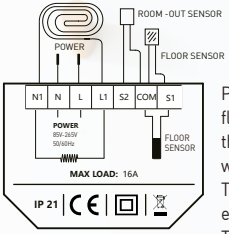


Please select floor sensor or room-out sensor or floor sensor and room-out sensor to run the thermostat if you install it in a bathroom or other wet location.
The room-out sensor is used to detect the temperature in the whole room.
The room-out sensor is sold separately.

**Suggestion:** Please keep the max load around 90% of 16A to prolong the lifetime.

# THERMOSTAT SYMBOLS

When the thermostat is installed and connected to the electricity, move the On/Off switch down to turn the thermostat on, and move it up to turn the thermostat off.

- Press to confirm the selection
- Press and to select parameters.

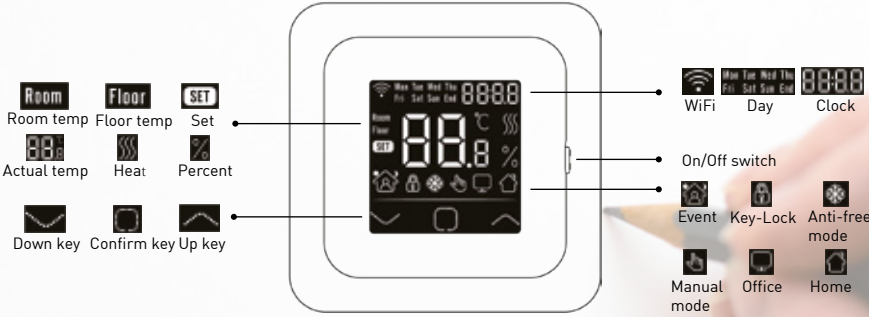

# Startup wizard

Initial settings must be specified when the unit is activated for the first time.

## Clock

Set day

Set hour

Set minute

* If WiFi is used, the thermostat will update the time automatically after connecting to the WiFi.

1

## Sensor selection

There are 5 options:

- **00 Floor sensor:** floor sensor mode (default).
- **01 Room-in sensor:** built-in room sensor mode.
- **02 Room-in sensor and floor sensor:** built-in sensor mode with floor temperature limit.
- **03 Room-out sensor:** external room sensor mode.
- **04 Room-out sensor and floor sensor:** external room sensor mode with floor temperature limit.

2

3

## Floor temp limit

(If you choose both sensors)

If you choose room sensor and floor sensor, floor temp limit must be set to protect the floor.

4

## Home or office

Home

Office

# WIFI CONNECTION

**Step 4**: Click "WIFI thermostat".

**Step 3**: Click "Add device" or "+" in the top right corner to add the device.

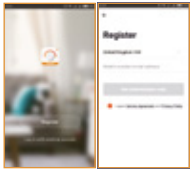


**Step 2**: Register and log in with mobile number/email address in the APP. Attention: Please read and confirm "Privacy Policy and Service agreement" before registration.

**Step 1**: Scan the QR code or download the Warmme app from App Store/Google browser.

**Step 5**: Check the thermostat display:
When the WIFI icon on the thermostat flashes quickly click “Press to connect”.

**Step 6**: Enter the Wifi password, and click “Confirm”.

**Step 7**: If the device was added successfully, you can change the device name and set the region, then click “Done”.
Attention: In case of failure, please make sure your are using the Wifi 2.4G version and check the Wifi signals, then use “Repeat” in the APP or follow the App instructions under "Change Pairing Mode".

**Step 8**: You can check the current temperature, set temperature etc. on the control interface.

# FUNCTION AND OPERATION

## 8.1 Temporary Override Temperature

On the main interface, Press or to set a temporary override temperature. The temperature is only valid for the current event and will not be saved.

## 8.2 Mode

On the main interface, Press to select the mode.
**There are 3 modes:**
**Auto mode:** This is the default mode. The thermostat runs according to event parameters set in Event Setting to save energy. Depending on the setting the home or office will be shown.
**Manual mode:** The thermostat will run with the set temperature.
**Anti-freeze mode:** The thermostat will run with the anti-freeze temperature defined in the settings (min. 5°C, max. 15°C).

## 8.3 Key-Lock

Lock all keys to prevent the settings from being changed. On the main interface, press and hold and simultaneously for 3 seconds to lock or unlock all of the keys.

## **8.4** Menu

On the actual temp interface, press and hold ■ for 3 seconds to enter the menu.

**CLK**

Set day and time

**EVE**

Set event's parameters

**READ**

Read heating time of a certain period

**SET**

Various settings

**END**

Back to main interface

> > >

1/ Sensor selection

2/ Room temp calibration

3/ Floor temp calibration

4/ LI Floor temp limit

5/ Schedule selection

6/ Set heating or cooling

7/ Adaptive function

8/ Set home or office use

9/ Sensor selection floor sensor

10/ Reset to factory settings

**------Sitemap of the menu**

## **8.4.1** Clock

The default interface of the menu is CLK. Day and clock is set here.

| | |
|---|---|
| Press | to enter day setting. |
| Press | or to set day. |
| Press | to enter hour setting. |
| Press | or to set hour. |
| Press | to enter minute setting. |
| Press | or to set minute. |
| Press | to go back to the main interface. |

* If WiFi is used the thermostat will update the time automatically after connecting to WiFi.

## **8.4.2** Event Setting

Here you can set and change the parameters. In Auto mode, the thermostat runs according to the parameters of the events.On the clock interface, press or to select EVE.

| | |
|---|---|
| Press | to enter day selection of event setting. |
| Press | or to select a day or select end. |
| Press | to enter the event selection or go back to the actual temp interface if you select end. |
| Press | or to select an event. |
| Press | to select the event's start time. |
| Press | or to set the hour of the start time. |
| Press | to enter the Minute setting. |
| Press | or to set the minute of the start time. |
| Press | to enter the temp setting. |
| Press | or to set the temperature. |
| Press | to go back to the event selection, or back to the day selection if the event is the last one. |

* If you want to return to the actual temp interface, go back to the day selection and select end.

## Default parameters

| | Day | (Wake) | (Leave) | (Back) | (Sleep) |
|---|---|---|---|---|---|
| Home | Mon-Fri | 06:00 20.0 °C | 08:30 15.0 °C | 17:00 20.0 °C | 23:00 15.0 °C |
| | Sat/Sun | 06:00 20.0 °C | 08:30 20.0 °C | 17:00 20.0 °C | 23:00 15.0 °C |
| | Day | (Work) | (Off work) | | |
| Office | Mon-Fri | 07:00 20.0 °C | 18:00 15.0 °C | | |
| | Sat/Sun | 07:00 15.0 °C | 18:00 15.0 °C | | |

### **8.4.3** Readout

You can read out the heating time (percentage) within a certain period.

On the clock interface, press or to select READ.

Press to enter Readout, the interface will show the heating time of the previous day.

Press or to select 1 day, 30 days, 365 days:the heating time within the selected period will be shown.

Press to go back to the actual temp interface.

### **8.4.4** Advanced Setting

The thermostat provides advanced settings to suit various special situations. These are normally set by technicians during initial installation.

On the clock interface, press or to select SET.

Press to enter advanced setting.

Each setting can be accessed by pressing , and parameters can be adjusted by pressing or .

# Parameters

| No. | Name | Default | Range |
|---|---|---|---|
| 1 | Sensor selection | 00: Floor sensor | 00: Floor sensor<br>01: Room-in sensor<br>02: 01+00<br>03: Room-out sensor<br>04: 03+00 |
| 2 | Room temp calibration | 0.0°C | -5.0°C - 5.0°C |
| 3 | Floor temp calibration | 0.0°C | -5.0°C - 5.0°C |
| 4 | Floor temp limit | 35.0°C | 20.0°C - 50.0°C |
| 5 | Schedule | 01: 5+1+1 | 00: 7<br>01: 5+1+1 |
| 6 | Used for | 00: Heating | 00: Heating<br>01: Cooling |

**1.** Sensor selection:

There are 5 options:
00 Floor sensor: floor sensor mode (default).
01 Room-in sensor: built-in room sensor mode.
02 Room-in sensor and floor sensor: built-in sensor mode with floor temperature limit.
03 Room-out sensor: external room sensor mode.
04 Room-out sensor and floor sensor: external room sensor mode with floor temperature limit.

**2.** Room temp calibration: calibrate the temperature detected by room sensor.
**3.** Floor temp calibration: calibrate the temperature detected by floor sensor.
**4.** Floor temp limit: if you choose both sensors, floor temp limit must be set to protect the floor.
**5.** Schedule: Select a weekly schedule for the event.

There are 2 options:
7: each day from Mon to Sun can be set individually.
5+1+1: 5 days from Mon to Fri have the same events, Sat and Sun can be set individually.

**6.** Used for: heating or cooling.

| No. | Name | Default | Range |
|---|---|---|---|
| 7 | Adaptive function | 00: Adaptive | 00: Adaptive<br>01: No |
| 8 | Setting home or office | 00: Home | 00: Home<br>01: Office |
| 9 | Sensor selection floor sensor | 00: 10 | 00 – 10 kOhm<br>01 – 12 kOhm<br>02 – 2 kOhm<br>03 – 15 kOhm |
| 10 | Reset | 00: No | 00: No<br>01: Reset |

**7.** Adaptive function: after several days of installation and use, Adaptive function ensures that the required temperature has already been reached when the next event begins.
**8.** Location setting: home or office.
**9.** Choose floor sensor:

There are 4 options:
00: 10 – Etherma default
01: 12 – OJ Sensor
02: 2 – HRT Sensor
03: 15 – Devi Sensor

**10.** Reset: all parameters are restored to default values.

## **8.5** Open window detection

This function only works when room sensor or both sensors is selected (see 6.2). With this function the thermostat will shut off automatically for 15 min when a window is opened, as it can detect a sudden falling of the room temperature.

# TROUBLESHOOTING

**E1:** Room-in sensor error.
**E2:** Floor sensor error.
**E4:** Room-out sensor error.

# Dimensions (mm)

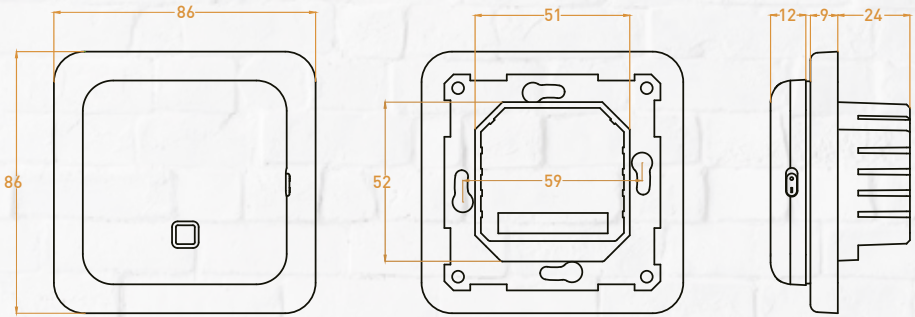

01
02
INSTALL
04
03