Parts Manual
45-8178
04/21/2011

DOTCO®

12-27 Series
Right Angle Sanders



12	X	2	7	XX	-	XX	XX	OH

Product Classification
12 = Ergo Grinder/Sander

Trottle Type
L = Locking Lever
S = Locking Lever

Motor Size
2 = 0.9 hp

Handle Style
7 = Right Angle

Speed Options (RPM)

Side Exhaust	Rear Exhaust
60 = 3,300	**70 =** 3,300
61 = 6,000	**71 =** 6,000
62 = 4,500	**72 =** 4,500

Termination Code
01 = 200 Series Collet
80 = 5/8-11 External Thread Spindle

Optional Collet (no extra cost)

08 = 1/8"	**18 =** 9/32"	**M6 =** 6mm
10 = 5/32"	**20 =** 5/16"	**M8 =** 8mm
12 = 3/16"	**22 =** 11/32"	
14 = 7/32"	**24 =** 3/8"	

Overhose Option (extra cost)
OH = Overhose (rear exhaust models only)

For additional product information visit our website at http://www.apextoolgroup.com

Dotco®

Handle and Motor Assembly

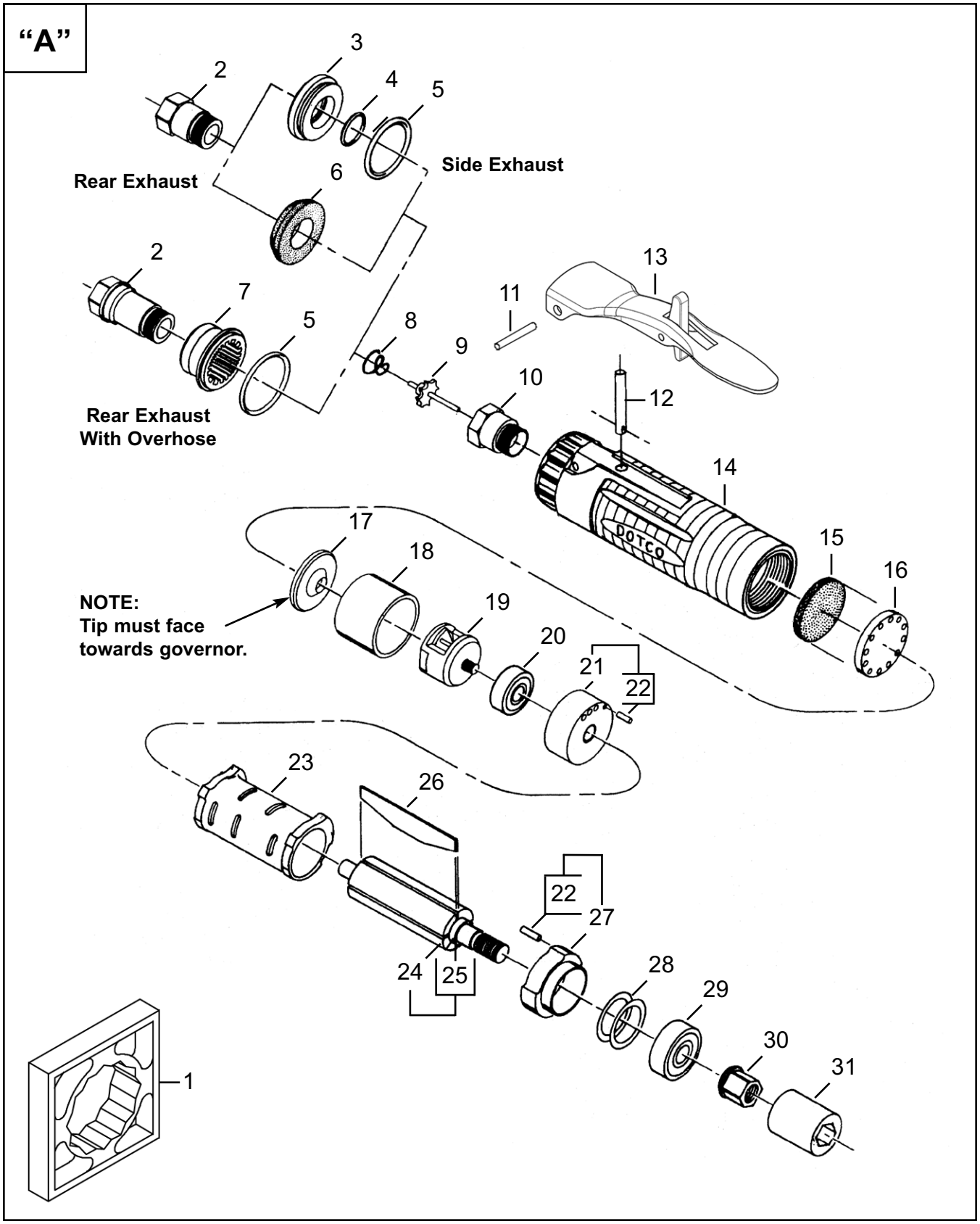

Handle and Motor Assembly

Illustration, Abbildung, Illustration, Ilustración, Illustrazione "A"

Ref	Number	#	X	EN	DE	FR	ES	IT
				Description	Benennung	Designation	Descripción	Descrizione
1	14-0851	1		Housing Wrench	Schraubenschlüssel	Clé plate	La llave	La chiave
2	Table "A"	1	1	Inlet Adapter	Zwischenstück	Adaptateur	Adaptador	Adattatore
3	01-2506	1		Exhaust Plug	Buchse	Bouchon	Tapón	Spina
4	2965	1	3	O-Ring	O-Ring	Joint torique	Anillo “O”	Anello ad O
5	3036	1	3	O-Ring	O-Ring	Joint torique	Anillo “O”	Anello ad O
6	01-2520	1	1	Diffuser	Diffuser	Diffuseur	Diffuseur	Diffusore
7	01-1032	1	1	Muffler	Schalldämpfer	Silencieux	Silenciador	Silenziatore
8	01-2519	1	3	Valve Spring	Druckfeder	Ressort	Resorte	Molla
9	01-2518	1	1	Valve	Ventil	Soupape	Válvula	Valvola
10	01-2504	1		Valve Seat	Ventilsitz	Siège de soupape	Asiento de la válvula	Sede valvola
11	1042	1	1	Lever Pin	Stift	Goupille cylindrique	Pasador	Spina
12	01-2517	1	1	Push Rod	Stange	Tige	Varilla	Asta
13	01-1267	1	1	Lock-Off Lever Asm	Hebel	Levier	Palanca	Leva
14	01-2571	1		Motor Housing	Gehäuse	Corps	Caja	Corpo
15	4293	1	2	Filter Disc	Platte	Plaque	Placa	Piattello
16	01-2016	1		Filter Retainer	Haltevorrichtung	Bague d’arrêt	Retén	Fermo
17	Table "A"	1		Governor Nozzle	Düse	Bec	Boquilla	Ugello
18	Table "A"	1		Nozzle Adapter	Zwischenstück	Adaptateur	Adaptador	Adattatore
19	Table "A"	1		Governor Module	Regler	Régulateur	Regulador	Regolatore
20	555	1	2	Ball Bearing	Kugellager	Roulement à billes	Cojinete de bolas	Cuscinetto a sfera
21	2945	1		Rear Plate	Hintere Platte	Plaque arrière	Placa posterior	Piattello posteriore
22	1041	2	2	Pin	Stift	Goupille cylindrique	Pasador	Spina
23	2255	1		Cylinder	Zylinder	Cylindre	Cilindro	Cilindro
24	7941	1		Rotor	Rotor	Rotor	El rotor	Il rotore
25	2017	1	1	Spacer	Distanzstück	Entretoise	Espaciador	Distanziale
26	2906	4	8	Rotor Blade	Rotorblatt	Palette	Alabe del rotor	Paletta del rotore
27	2292	1		Front Plate	Vorderplatte	Plaque de devanture	Placa frontal	Piattello anteriore
28	2488	1	1	Shim Packet	Unterlegstück	Cale pelable	Calzo	Spessore
29	500	1	2	Ball Bearing	Kugellager	Roulement à billes	Cojinete de bolas	Cuscinetto a sfera
30	2284	1		Coupling Nut	Koppelnd Schraubenmutter	Attelage Écrou	Enganche Tuerca	Agganciamento Nocciola
31	2287	1		Coupling	Kupplung	Couplage	Acoplamiento	Accoppiamento

(#) Quantity / Stückzahl / Quantité / Cantidad / Quantità

(X) Recommended Spare Parts / Kennziechnet empfohlenes / Identifica un particolare di ricambio raccomandato / Designa el repuesto recomendado / Indique la piéce de rechange conseillée.

Table, Tabelle, Tableau, Tabla, Tabella "A"

Ref	Description	#	12-2760	#	12-2761	#	12-2762	#	12-2770	#	12-2771	#	12-2772
2	Inlet Adapter (w/o OH)	1	01-2505	1	01-2505	1	01-2505	1	01-2505	1	01-2505	1	01-2505
	Inlet Adapter (w/ OH)		---		---		---	1	01-1031	1	01-1031	1	01-1031
17	Governor Nozzle	1	2937	1	2937	1	2937	1	2076	1	2076	1	2076
18	Nozzle Adapter	1	2936	1	2936	1	2936	1	2159	1	2159	1	2159
19	Governor Module	1	2933	1	2939	1	2708	1	2933	1	2939	1	2708

Dotco®

Angle Head

"B"

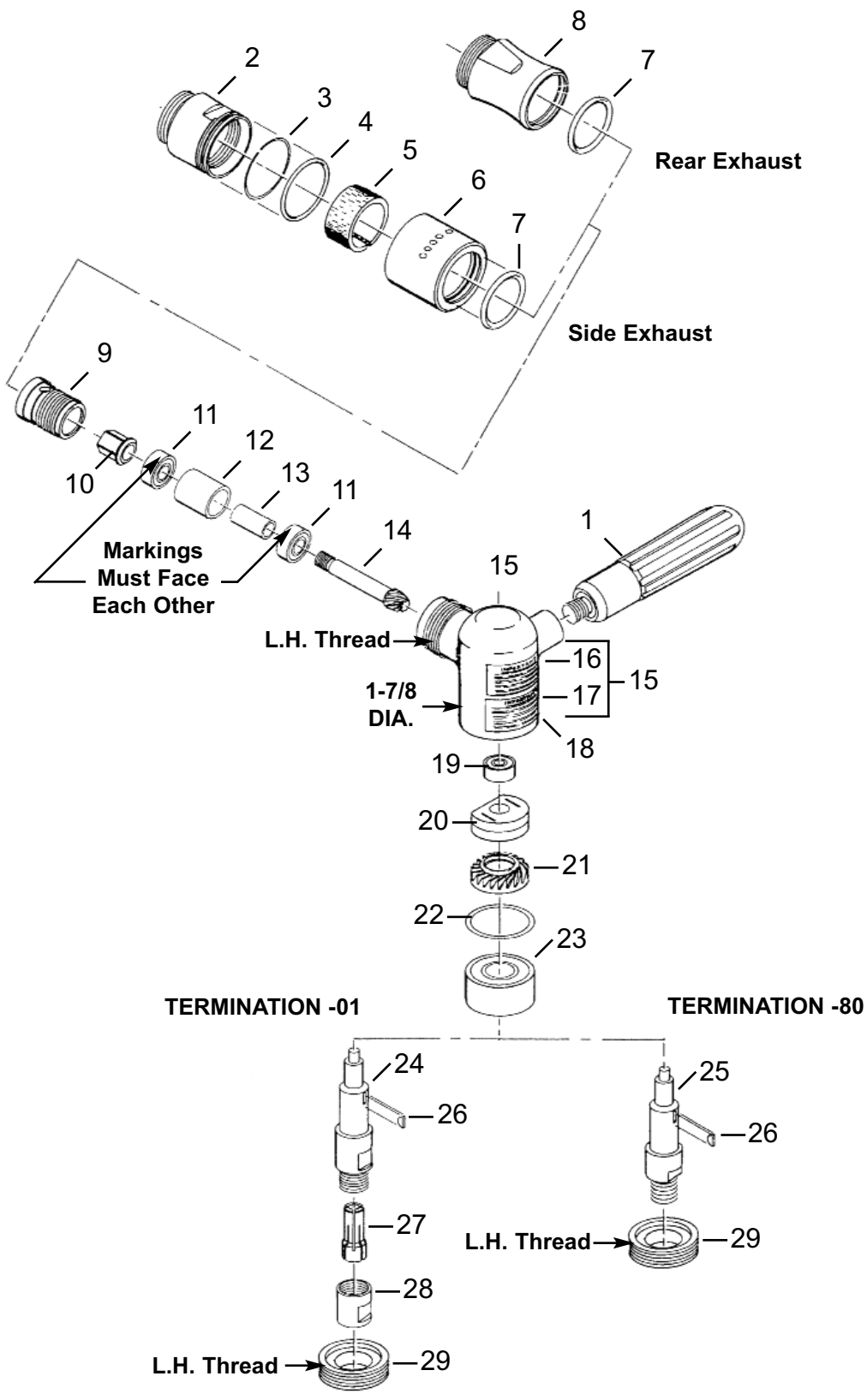

Illustration, Abbildung, Illustration, Ilustración, Illustrazione "B"

Ref	Number	#	X	EN	DE	FR	ES	IT
				Description	Benennung	Designation	Descripción	Descrizione
1	01-7678	1		Dead Handle	Toter Griff	Poignée morte	El Asidero muerto	Il Manico morto
2	01-2048	1		Lock Ring	Verschlußring	Bague de verrouillage	Anillo de cierre	Anello di bloccaggio
3	8054	1	2	Nylon Retainer	Haltevorrichtung	Bague d'arrêt	Retén	Fermo
4	3037	1	3	O-Ring	O-Ring	Joint torique	Anillo "O"	Anello ad O
5	8055	1	3	Muffler	Schalldämpfer	Silencieux	Silenciador	Silenziatore
6	8052	1		Muffler Housing	Gehäuse	Corps	Caja	Corpo
7	1169	1	3	O-Ring	O-Ring	Joint torique	Anillo "O"	Anello ad O
8	01-2045	1		Cap	Kappe	Chapeau	Tapa	Cappello
9	2252	1		Lock Ring	Verschlußring	Bague de verrouillage	Anillo de cierre	Anello di bloccaggio
10	2284	1		Driver	Antrieb	Entraînement	Impulsión	Trasmissione
11	534	1	2	Duplex Bearing	Lager	Coussinet	Cojinete	Cuscinetto
12	2237	1		Spacer	Distanzstück	Entretoise	Espaciador	Distanziale
13	2242	1		Spacer	Distanzstück	Entretoise	Espaciador	Distanziale
14	Table "B"	1	1	Pinion	Pinion	Pignon	Piñón	Il pignone
15	2538	1		Angle Housing	Winkelkopfgehäuse	Cage d'équerre	Alojamiento angular	Corpo testina angolare
16	1463	1		Grease Fitting	Schmiernippel	Monture de graisse	Accesorio de grasa	Ingrassatore
17	1338	1		Lubrication Decal	Aufkleber	Etiquette	Etiqueta	Etichette
18	5005	1		Sander Decal	Aufkleber	Etiquette	Etiqueta	Etichette
19	505	1	2	Ball Bearing	Kugellager	Roulement à billes	Cojinete de bolas	Cuscinetto a sfera
20	7755	2	4	Lube Disc	Ölungssubstanz	Lubrificateur	Lubricador	Lubrificante
21	Table "B"	1	1	Bevel Gear	Kegelrad	Engrenage conique	Engranaje cónico	Ingranaggio conico
22	2645	1	1	Shim Packet	Unterlegstück	Cale pelable	Calzo	Spessore
23	543	1	2	Ball Bearing	Kugellager	Roulement à billes	Cojinete de bolas	Cuscinetto a sfera
24	2666	1		Spindle (-01)	Spindel (-01)	Arbre (-01)	Husillo (-01)	Mandrino (-01)
25	2541	1		Spindle (-80)	Spindel (-80)	Arbre (-80)	Husillo (-80)	Mandrino (-80)
26	2062	1		Woodruff Key	Woodruff Schluessel	Clavette Woodruff	Llave Woodruff	Chiavetta woodruff
27	Table "B1"	1		Collet	Futter	Douille de serrage	Boquilla	Bussola di chiusura
28	2058	1		Collet Chuck Cap	Kappe	Chapeau	Tapa	Cappello
29	2542	1		Lock Ring	Verschlußring	Bague de verrouillage	Anillo de cierre	Anello di bloccaggio
--	14-0812	1		Wrench (3/4") (-01)	Schraubenschlüssel	Clé plate	La llave	La chiave
--	45-1982	1		Grease Gun	Schmiermittel	Graisse	Grasa	Grasso
--	45-0980	1		Gear Lube	Schmierung	Lubrification	Lubricación	Lubrificazione

(#) Quantity / Stückzahl / Quantité / Cantidad / Quantità
(X) Recommended Spare Parts / Kennziechnet empfohlenes / Identifica un particolare di ricambio raccomandato / Designa el repuesto recomendado / Indique la piéce de rechange conseillée.

Table, Tabelle, Tableau, Tabla, Tabella "B"

Ref	Description	#	12-2760 12-2770	#	12-2761 12-2771	#	12-2762 12-2772
14	Pinion	1	2646	1	2667	1	2646
21	Bevel Gear	1	2647	1	2668	1	2647

Table, Tabelle, Tableau, Tabla, Tabella "B1"

200 Series Optional Collets					
Part No.	**Arbor Size**	**Part No.**	**Arbor Size**	**Part No.**	**Arbor Size**
204	1/8"	**208 ***	**1/4"**	212	3/8"
205	5/32"	209	9/32"	213	6mm
206	3/16"	210	5/16"	216	8mm
207	7/32"	211	11/32"		

* Standard Collet

Sales & Service Centers

Note: All locations may not service all products. Please contact the nearest Sales & Service Center for the appropriate facility to handle your service requirements.

Dallas, TX
Apex Tool Group
Sales & Service Center
1470 Post & Paddock
Grand Prairie, TX 75050
Tel: 972-641-9563
Fax: 972-641-9674

Detroit, MI
Apex Tool Group
Sales & Service Center
2630 Superior Court
Auburn Hills, MI 48326
Tel: 248-391-3700
Fax: 248-391-7824

Houston, TX
Apex Tool Group
Sales & Service Center
6550 West Sam Houston
Parkway North, Suite 200
Houston, TX 77041
Tel: 713-849-2364
Fax: 713-849-2047

Lexington, SC
Apex Tool Group
670 Industrial Drive
Lexington, SC 29072
Tel: 800-845-5629
Tel: 803-951-7544
Fax: 803-358-7681

Los Angeles, CA
Apex Tool Group
Sales & Service Center
15503 Blackburn Avenue
Norwalk, CA 90650
Tel: 562-623-4457
Fax: 562-802-1718

Seattle, WA
Apex Tool Group
Sales & Service Center
2865 152nd Avenue N.E.
Redmond, WA 98052
Tel: 425-497-0476
Fax: 425-497-0496

York, PA
Apex Tool Group
Sales & Service Center
3990 East Market Street
York, PA 17402
Tel: 717-755-2933
Fax: 717-757-5063

Canada
Apex Tool Group
Sales & Service Center
5925 McLaughlin Road
Mississauga, Ont. L5R 1B8
Canada
Tel: 905-501-4785
Fax: 905-501-4786

Germany
Cooper Power Tools
GmbH & Co. OHG
a company of
Apex Tool Group, LLC
Industriestraße 1
73463 Westhausen
Germany
Tel: +49 (0) 73 63 81 0
Fax: +49 (0) 73 63 81 222

England
Cooper Power Tools
GmbH & Co. OHG
a company of
Apex Tool Group, LLC
C/O Spline Gauges
Piccadilly, Tamworth
Staffordshire B78 2ER
United Kingdom
Tel: +44 1827 8741 28
Fax: +44 1827 8741 28

France
Cooper Power Tools SAS
a company of
Apex Tool Group, LLC
25 rue Maurice Chevalier
77330 Ozoir-La-Ferrière
France
Tel: +33 1 6443 2200
Fax: +33 1 6443 1717

China
Cooper (China) Co., Ltd.
a company of
Apex Tool Group, LLC
955 Sheng Li Road,
Heqing Pudong, Shanghai
China 201201
Tel: +86-21-28994176
Fax: +86-21-51118446

Mexico
Cooper Tools
de México S.A. de C.V.
a company of
Apex Tool Group, LLC
Vialidad El Pueblito #103
Parque Industrial Querétaro
Querétaro, QRO 76220
Mexico
Tel: +52 (442) 211-3800
Fax: +52 (442) 103-0443

Brazil
Cooper Tools Industrial Ltda.
a company of
Apex Tool Group, LLC
Av. Liberdade, 4055
Zona Industrial - Iporanga
18087-170 Sorocaba
SP Brazil
Tel: +55 15 2383929
Fax: +55 15 2383260

Hungary
Cooper Tools Hungaria Kft.
a company of
Apex Tool Group, LLC
Berkenyefa sor 7
Pf: 640
9027 Györ
Hungary
Tel: +36 96 66 1383
Fax: +36 96 66 1135

Apex Tool Group, LLC
1000 Lufkin Road
Apex, NC 27539
Phone: 919-387-0099
Fax: 919-387-2614
www.apextoolgroup.com

DOTCO®

45-8178/Printed in USA 04/2011/Copyright © Apex Tool Group, LLC