Parts Manual
45-8176
04/27/2011

DOTCO®

12-27 Series
Right Angle Grinder



12	X	2	7	XX	-	XX	XX	OH

Tool Series
- **12 =** Ergo Grinder/Sander

Throttle Type
- **L =** Locking Lever
- **S =** Locking Lever

Motor Size
- **2 =** 0.9 Horsepower

Handle Style
- **7 =** Right Angle

Speed Options (RPM)

Side Exhaust	Rear Exhaust
36 = 13,500	**76 =** 13,500
37 = 12,000	**77 =** 12,000
38 = 14,500	**78 =** 14,500

Termination Code
- **27 =** 3" Type 1 Cut-Off Wheel
- **28 =** 4" Type 1 Cut-Off Wheel
- **32 =** 1/4"-28 Internal Thread Spindle
- **36 =** 300 Series Collet (3 piece)
- **45 =** Universal Collet (short)
- **83 =** 3" Depressed Center Wheel
- **84 =** 4" Depressed Center Wheel

Optional Collet (no extra cost)

08 = 1/8"	**20 =** 5/16"
10 = 5/32"	**22 =** 11/32"
12 = 3/16"	**24 =** 3/8"
14 = 7/32"	**M6 =** 6mm
18 = 9/32"	**M8 =** 8mm

Overhose Option (extra cost)
- **OH =** Overhose (rear exhaust models)

For additional product information visit our website at http://www.apextoolgroup.com

Dotco®

Handle and Motor Assembly

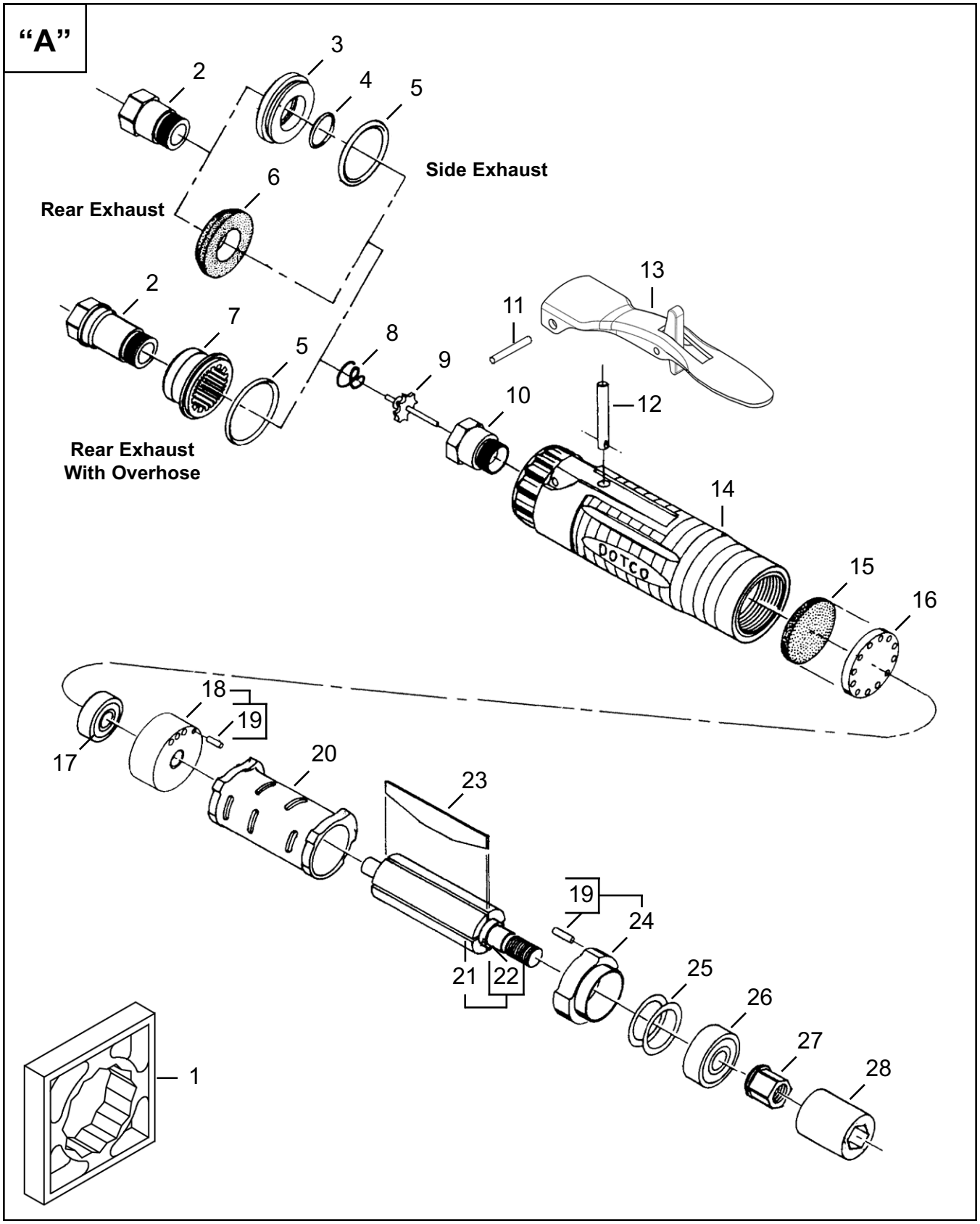

Handle and Motor Assembly

Illustration, Abbildung, Illustration, Ilustración, Illustrazione "A"

Ref	Number	#	X	EN	DE	FR	ES	IT
				Description	Benennung	Designation	Descripción	Descrizione
1	14-0851	1		Housing Wrench	Schraubenschlüssel	Clé plate	La llave	La chiave
2	Table "A"	1	1	Inlet Adapter	Zwischenstück	Adaptateur	Adaptador	Adattatore
3	01-2506	1		Exhaust Plug	Buchse	Bouchon	Tapón	Spina
4	2965	1	3	O-Ring	O-Ring	Joint torique	Anillo “O”	Anello ad O
5	3036	1	3	O-Ring	O-Ring	Joint torique	Anillo “O”	Anello ad O
6	01-2520	1	1	Diffuser	Diffuser	Diffuseur	Diffuseur	Diffusore
7	01-1032	1	1	Muffler	Schalldämpfer	Silencieux	Silenciador	Silenziatore
8	01-2519	1	3	Valve Spring	Druckfeder	Ressort	Resorte	Molla
9	01-2518	1	1	Valve	Ventil	Soupape	Válvula	Valvola
10	01-2504	1		Valve Seat	Ventilsitz	Siège de soupape	Asiento de la válvula	Sede valvola
11	1042	1	1	Lever Pin	Stift	Goupille cylindrique	Pasador	Spina
12	01-2517	1	1	Push Rod	Stange	Tige	Varilla	Asta
13	01-1267	1	1	Lock-Off Lever Asm	Hebel	Levier	Palanca	Leva
14	01-2560	1		Motor Housing	Gehäuse	Corps	Caja	Corpo
15	4293	1	2	Filter Disc	Platte	Plaque	Placa	Piattello
16	01-2016	1		Filter Retainer	Haltevorrichtung	Bague d’arrêt	Retén	Fermo
17	538	1	2	Ball Bearing	Kugellager	Roulement à billes	Cojinete de bolas	Cuscinetto a sfera
18	7003	1		Rear Plate	Hintere Platte	Plaque arrière	Placa posterior	Piattello posteriore
19	1041	2	2	Pin	Stift	Goupille cylindrique	Pasador	Spina
20	2255	1		Cylinder	Zylinder	Cylindre	Cilindro	Cilindro
21	7654	1		Rotor	Rotor	Rotor	El rotor	Il rotore
22	2017	1	1	Spacer	Distanzstück	Entretoise	Espaciador	Distanziale
23	2253	4	8	Rotor Blade	Rotorblatt	Palette	Alabe del rotor	Paletta del rotore
24	2292	1		Front Plate	Vorderplatte	Plaque de devanture	Placa frontal	Piattello anteriore
25	2488	1	1	Shim Packet	Unterlegstück	Cale pelable	Calzo	Spessore
26	500	1	2	Ball Bearing	Kugellager	Roulement à billes	Cojinete de bolas	Cuscinetto a sfera
27	2284	1		Coupling Nut	Koppelnd Schraubenmutter	Attelage Écrou	Enganche Tuerca	Agganciamento Nocciola
28	2287	1		Coupling	Kupplung	Couplage	Acoplamiento	Accoppiamento

(#) Quantity / Stückzahl / Quantité / Cantidad / Quantità

(X) Recommended Spare Parts / Kennziechnet empfohlenes / Identifica un particolare di ricambio raccomandato / Designa el repuesto recomendado / Indique la piéce de rechange conseillée.

Table, Tabelle, Tableau, Tabla, Tabella "A"

Ref.	Description	#	12-2736 12-2737 12-2738	#	12-2776 12-2777 12-2778
2	Inlet Adapter (w/o OH)	1	01-2505	1	01-2505
	Inlet Adapter (w/ OH)		---	1	01-1031

Dotco®

Angle Head

"B"

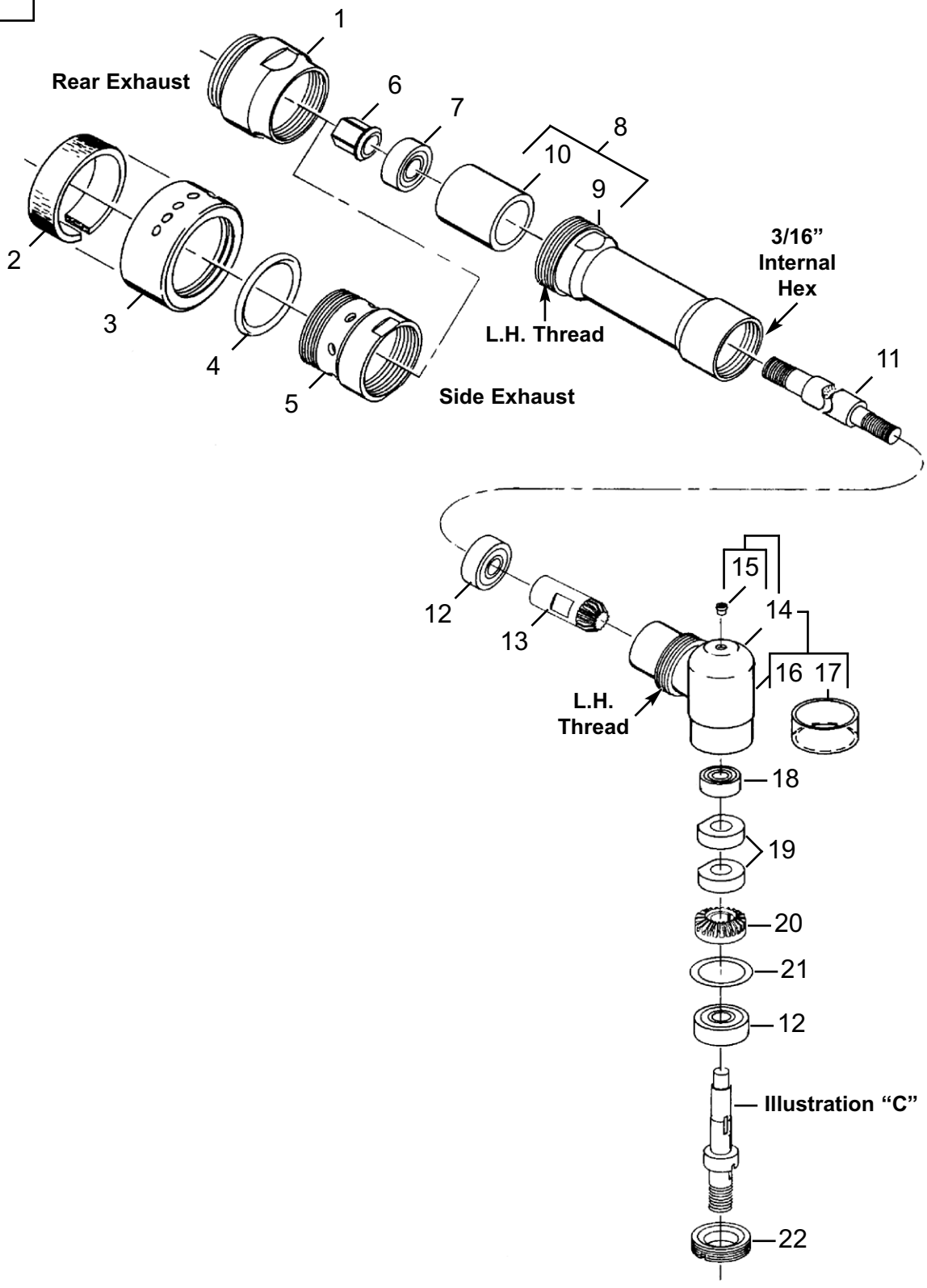

Illustration, Abbildung, Illustration, Ilustración, Illustrazione "B"

Ref	Number	#	X	EN	DE	FR	ES	IT
				Description	Benennung	Designation	Descripción	Descrizione
1	01-2043	1		Lock Ring	Verschlußring	Bague de verrouillage	Anillo de cierre	Anello di bloccaggio
2	01-2065	1	3	Muffler	Schalldämpfer	Silencieux	Silenciador	Silenziatore
3	01-2590	1		Muffler Housing	Gehäuse	Corps	Caja	Corpo
4	01-1169	1	3	O-Ring	O-Ring	Joint torique	Anillo “O”	Anello ad O
5	01-2067	1		Lock Ring	Verschlußring	Bague de verrouillage	Anillo de cierre	Anello di bloccaggio
6	2284	1		Driver	Antrieb	Entraînement	Impulsión	Trasmissione
7	506	1	2	Ball Bearing	Kugellager	Roulement à billes	Cojinete de bolas	Cuscinetto a sfera
8	01-2064	1		Housing Assembly	Montage	Assemblage	Ensamblaje	Assemblaggio
9	01-2069	1		Spindle Housing	Spindelgehäuse	Cage à pignons	Caja del husillo	Corpo mandrino
10	01-2070	1		Spacer	Distanzstück	Entretoise	Espaciador	Distanziale
11	01-2509	1		Pinion Shaft	Achse	Axe du vérin	Eje	Albero
12	538	2	4	Ball Bearing	Kugellager	Roulement à billes	Cojinete de bolas	Cuscinetto a sfera
13	Table "B"	1	1	Pinion	Pinion	Pignon	Piñón	Il pignone
14	1024	1		Angle Housing	Winkelkopfgehäuse	Cage d’équerre	Alojamiento angular	Corpo testina angolare
15	1464	1		Grease Fitting	Schmiernippel	Monture de graisse	Accesorio de grasa	Ingrassatore
16	1338	1		Lubrication Decal	Aufkleber	Etiquette	Etiqueta	Etichette
17	1356	1	1	Wear Ring	Ring	Bague	Anillo	Anello
18	504	1	2	Ball Bearing	Kugellager	Roulement à billes	Cojinete de bolas	Cuscinetto a sfera
19	1755	2	4	Lube Disc	Ölungssubstanz	Lubrificateur	Lubricador	Lubrificante
20	Table "B"	1	1	Bevel Gear	Kegelrad	Engrenage conique	Engranaje cónico	Ingranaggio conico
21	1355	1	1	Shim Packet	Unterlegstück	Cale pelable	Calzo	Spessore
22	1025	1		Lock Ring	Verschlußring	Bague de verrouillage	Anillo de cierre	Anello di bloccaggio
--	45-1982	1		Grease Gun	Schmiermittel	Graisse	Grasa	Grasso
--	45-0980	1		Gear Lube	Schmierung	Lubrification	Lubricación	Lubrificazione
--	14-0186	1		Hex Key (3/16")	Schlüssel	Clavette	Llave	Chiave

(#) Quantity / Stückzahl / Quantité / Cantidad / Quantità
(X) Recommended Spare Parts / Kennziechnet empfohlenes / Identifica un particolare di ricambio raccomandato / Designa el repuesto recomendado / Indique la piéce de rechange conseillée.

Table, Tabelle, Tableau, Tabla, Tabella "B"

Ref.	Description	#	12-2737 12-2777	#	12-2736 12-2776	#	12-2738 12-2778
13	Pinion	1	1984	1	1965	1	1974
20	Bevel Gear	1	1985	1	1964	1	1975

Dotco®

Terminations

"A"

TERMINATION 27
3" Type 1 Cut-Off Wheel

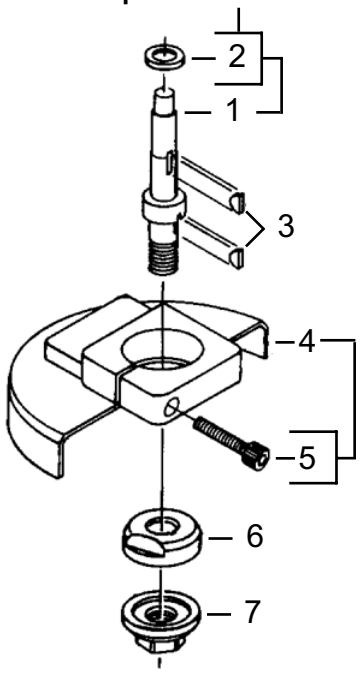

TERMINATION 28
4" Type 1 Cut-Off Wheel

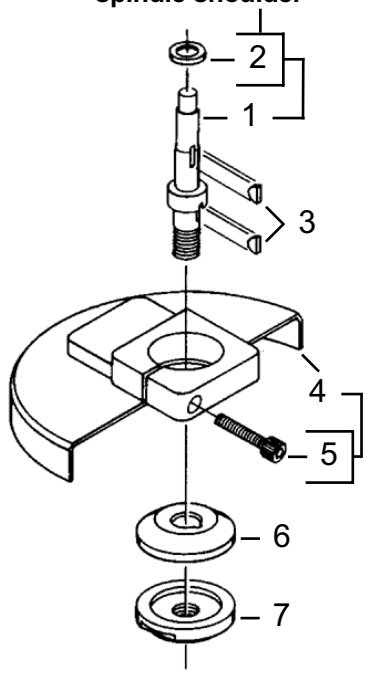

TERMINATION 32

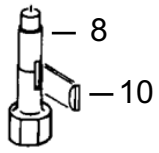

TERMINATION 45

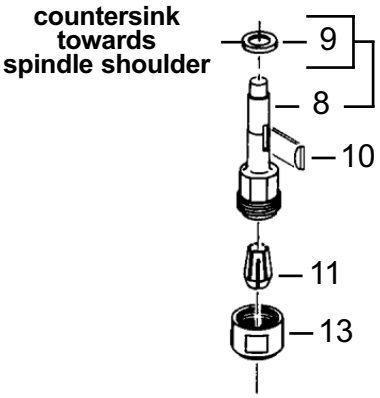

TERMINATION 83
3" Depressed Center Wheel

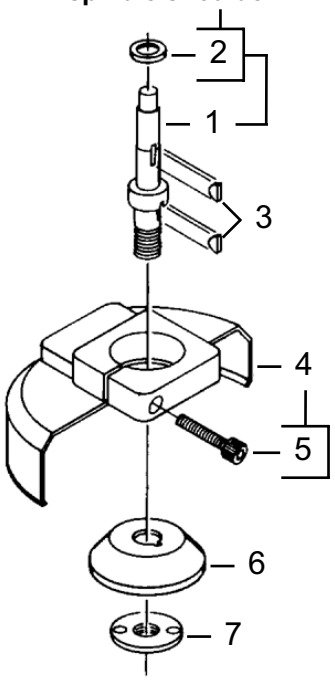

TERMINATION 84
4" Depressed Center Wheel

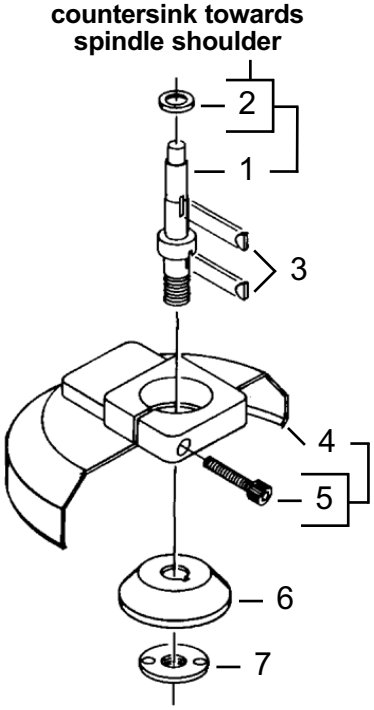

TERMINATION 36

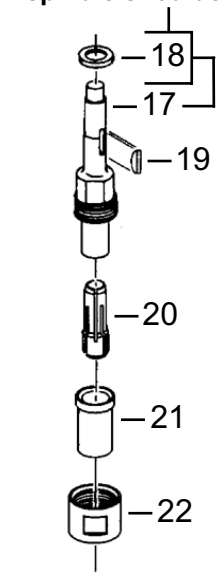

Illustration, Abbildung, Illustration, Ilustración, Illustrazione "C"

Ref	Number	#	X	EN	DE	FR	ES	IT
				Description	Benennung	Designation	Descripción	Descrizione
Terminations -27, -28, -83, -84:								
1	1402	1		Spindle	Spindel	Arbre	Husillo	Mandrino
2	7792	1	2	Spacer	Distanzstück	Entretoise	Espaciador	Distanziale
3	1062	2	4	Woodruff Key	Schlüssel	Clavette	Llave	Chiave
4	14-1258	1		3" Guard (-27)	Radschutz	Protection d'engrenage	Protector de rueda	Riparo mola
	14-1259	1		4" Guard (-28)	Radschutz	Protection d'engrenage	Protector de rueda	Riparo mola
	14-2593	1		3" Guard (-83)	Radschutz	Protection d'engrenage	Protector de rueda	Riparo mola
	14-2594	1		4" Guard (-84)	Radschutz	Protection d'engrenage	Protector de rueda	Riparo mola
5	14-1518	1	2	Cap Screw	Kopfschraube	Vis de chapeau	Tornillo de casquete	Vite a testa cilindrica
6	14-1174	1		Inner Flange (-27)	Flansch	Rebord	Pestaña	Flangia
	14-1172	1		Inner Flange (-28)	Flansch	Rebord	Pestaña	Flangia
	7667	1		Inner Flange (-83)	Flansch	Rebord	Pestaña	Flangia
	7667	1		Inner Flange (-84)	Flansch	Rebord	Pestaña	Flangia
7	14-1175	1		Outer Flange (-27)	Flansch	Rebord	Pestaña	Flangia
	14-1173	1		Outer Flange (-28)	Flansch	Rebord	Pestaña	Flangia
	7668	1		Outer Flange (-83)	Flansch	Rebord	Pestaña	Flangia
	7668	1		Outer Flange (-84)	Flansch	Rebord	Pestaña	Flangia
--	14-0186	1		Hex Key (3/16")	Schlüssel	Clavette	Llave	Chiave
Termination -27:								
--	14-0809	1		Wrench (9/16")	Schraubenschlüssel	Clé plate	La llave	La chiave
--	14-0812	1		Wrench (3/4")	Schraubenschlüssel	Clé plate	La llave	La chiave
Termination -28:								
--	14-0820	1		Wrench (1-1/4")	Schraubenschlüssel	Clé plate	La llave	La chiave
Terminations -83, -84:								
--	7666	1		Spanner Wrench	Schraubenschlüssel	Clé plate	La llave	La chiave
Terminations -32, -36, -45:								
8	1069	1		Spindle (-32)	Spindel	Arbre	Husillo	Mandrino
	7660	1		Spindle (-36)	Spindel	Arbre	Husillo	Mandrino
	7814	1		Spindle (-45)	Spindel	Arbre	Husillo	Mandrino
9	7792	1	2	Spacer	Distanzstück	Entretoise	Espaciador	Distanziale
10	1062	1	2	Woodruff Key	Schlüssel	Clavette	Llave	Chiave
11	Table "C"	1		Collet (-36)	Futter	Douille de serrage	Boquilla	Bussola di chiusura
	7808	1		Collet (-45)	Futter	Douille de serrage	Boquilla	Bussola di chiusura
12	1053	1		Nosepiece	Kopfstück	Tuyère	Tobera	Naso
13	1058	1		Collet Cap (-36)	Kappe	Chapeau	Tapa	Cappello
	7815	1		Collet Cap (-45)	Kappe	Chapeau	Tapa	Cappello
--	14-0807	1		Wrench (7/16")	Schraubenschlüssel	Clé plate	La llave	La chiave
Terminations -36, -45:								
--	14-0811	1		Wrench (11/16")	Schraubenschlüssel	Clé plate	La llave	La chiave

(#) Quantity / Stückzahl / Quantité / Cantidad / Quantità
(X) Recommended Spare Parts / Kennziechnet empfohlenes / Identifica un particolare di ricambio raccomandato / Designa el repuesto recomendado / Indique la piéce de rechange conseillée.

Table, Tabelle, Tableau, Tabla, Tabella "C"

300 Series Optional Collets					
Part No.	**Arbor Size**	**Part No.**	**Arbor Size**	**Part No.**	**Arbor Size**
301	3/64"	305	5/32"	310	6mm
302	5/64"	306	3/16"	311	3mm
303	3/32"	307	7/32"		
304	1/8"	**308 ***	**1/4"**		

* Standard Collet

Sales & Service Centers

Note: All locations may not service all products. Please contact the nearest Sales & Service Center for the appropriate facility to handle your service requirements.

Dallas, TX
Apex Tool Group
Sales & Service Center
1470 Post & Paddock
Grand Prairie, TX 75050
Tel: 972-641-9563
Fax: 972-641-9674

Detroit, MI
Apex Tool Group
Sales & Service Center
2630 Superior Court
Auburn Hills, MI 48326
Tel: 248-391-3700
Fax: 248-391-7824

Houston, TX
Apex Tool Group
Sales & Service Center
6550 West Sam Houston
Parkway North, Suite 200
Houston, TX 77041
Tel: 713-849-2364
Fax: 713-849-2047

Lexington, SC
Apex Tool Group
670 Industrial Drive
Lexington, SC 29072
Tel: 800-845-5629
Tel: 803-951-7544
Fax: 803-358-7681

Los Angeles, CA
Apex Tool Group
Sales & Service Center
15503 Blackburn Avenue
Norwalk, CA 90650
Tel: 562-623-4457
Fax: 562-802-1718

Seattle, WA
Apex Tool Group
Sales & Service Center
2865 152nd Avenue N.E.
Redmond, WA 98052
Tel: 425-497-0476
Fax: 425-497-0496

York, PA
Apex Tool Group
Sales & Service Center
3990 East Market Street
York, PA 17402
Tel: 717-755-2933
Fax: 717-757-5063

Canada
Apex Tool Group
Sales & Service Center
5925 McLaughlin Road
Mississauga, Ont. L5R 1B8
Canada
Tel: 905-501-4785
Fax: 905-501-4786

Germany
Cooper Power Tools
GmbH & Co. OHG
a company of
Apex Tool Group, LLC
Industriestraße 1
73463 Westhausen
Germany
Tel: +49 (0) 73 63 81 0
Fax: +49 (0) 73 63 81 222

England
Cooper Power Tools
GmbH & Co. OHG
a company of
Apex Tool Group, LLC
C/O Spline Gauges
Piccadilly, Tamworth
Staffordshire B78 2ER
United Kingdom
Tel: +44 1827 8741 28
Fax: +44 1827 8741 28

France
Cooper Power Tools SAS
a company of
Apex Tool Group, LLC
25 rue Maurice Chevalier
77330 Ozoir-La-Ferrière
France
Tel: +33 1 6443 2200
Fax: +33 1 6443 1717

China
Cooper (China) Co., Ltd.
a company of
Apex Tool Group, LLC
955 Sheng Li Road,
Heqing Pudong, Shanghai
China 201201
Tel: +86-21-28994176
Fax: +86-21-51118446

Mexico
Cooper Tools
de México S.A. de C.V.
a company of
Apex Tool Group, LLC
Vialidad El Pueblito #103
Parque Industrial Querétaro
Querétaro, QRO 76220
Mexico
Tel: +52 (442) 211-3800
Fax: +52 (442) 103-0443

Brazil
Cooper Tools Industrial Ltda.
a company of
Apex Tool Group, LLC
Av. Liberdade, 4055
Zona Industrial - Iporanga
18087-170 Sorocaba
SP Brazil
Tel: +55 15 2383929
Fax: +55 15 2383260

Hungary
Cooper Tools Hungaria Kft.
a company of
Apex Tool Group, LLC
Berkenyefa sor 7
Pf: 640
9027 Györ
Hungary
Tel: +36 96 66 1383
Fax: +36 96 66 1135

Apex Tool Group, LLC
1000 Lufkin Road
Apex, NC 27539
Phone: 919-387-0099
Fax: 919-387-2614
www.apextoolgroup.com

DOTCO®

45-8176/Printed in USA 04/2011/Copyright © Apex Tool Group, LLC